PASTERNACK®
THE ENGINEER'S RF SOURCE

N Female Connector Solder Attachment 2 Hole Flange Mount Pin Terminal, 1.0 inch Hole Spacing

Configuration

- N Female Connector
- MIL-STD-348
- 50 Ohms
- Straight Body Geometry
- Pin Interface Type
- Solder Attachment
- 2 Hole Flange

Features

- Silver Plated Contact
- Contact plating according to QQ-S-365

Applications

- General Purpose Test
- Rack and Panel Mount Applications

Description

Pasternack's PE44079 type N female connector solder attachment 2 hole flange mount pin terminal, 1.0 inch hole spacing is part of our full line of RF components available for same-day shipping. This type N 2 hole flange connector allows designers to create external connections on their product enclosures, and can be used in a variety of other rack mount and panel mount applications.

Our type N female 2 hole flange connector PE44079 datasheet specifications and drawing with dimensions are shown below in this PDF. Pasternack's broad catalog of RF, microwave and millimeter wave connectors allows designers to configure and customize their signal connections however they like. Whether the need is to provide an I/O for a board design, or simply create a custom cable assembly configuration, Pasternack has the right connector for the job. Pasternack can also expertly build your custom cable connector assemblies for you and ship same-day.

Mechanical Specifications

Size

Length	1.441 in [36.6 mm]
Width/Dia.	0.64 in [16.26 mm]
Height	1.3 in [33.02 mm]
Weight	0.061 lbs [27.67 g]

Material Specifications

Description	Material	Plating
Contact		Silver QQ-S-365
Insulation	PTFE	
Body	Brass	Nickel QQ-N-290

Click the following link (or enter part number in "SEARCH" on website) to obtain additional part information including price, inventory and certifications: N Female Connector Solder Attachment 2 Hole Flange Mount Pin Terminal, 1.0 inch Hole Spacing PE44079

Pasternack Enterprises, Inc. • P.O. Box 16759, Irvine, CA 92623
Phone: (866) 727-8376 or (949) 261-1920 • **Fax:** (949) 261-7451
Sales@Pasternack.com • Techsupport@Pasternack.com

© 2016 Pasternack Enterprises All Rights Reserved

N Female Connector Solder Attachment 2 Hole Flange Mount Pin Terminal, 1.0 inch Hole Spacing

Environmental Specifications

Temperature

Operating Range	-65 to +165 deg C

Compliance Certifications (see product page for current document)

Plotted and Other Data

Notes:

N Female Connector Solder Attachment 2 Hole Flange Mount Pin Terminal, 1.0 inch Hole Spacing from Pasternack Enterprises has same day shipment for domestic and International orders. Our RF, microwave and millimeter wave products maintain a 99% availability and are part of the broadest selection in the industry.

Click the following link (or enter part number in "SEARCH" on website) to obtain additional part information including price, inventory and certifications: N Female Connector Solder Attachment 2 Hole Flange Mount Pin Terminal, 1.0 inch Hole Spacing PE44079

URL: https://www.pasternack.com/n-female-standard-pin-terminal-connector-pe44079-p.aspx

The information contained in this document is accurate to the best of our knowledge and representative of the part described herein. It may be necessary to make modifications to the part and/or the documentation of the part, in order to implement improvements. Pasternack reserves the right to make such changes as required. Unless otherwise stated, all specifications are nominal. Pasternack does not make any representation or warranty regarding the suitability of the part described herein for any particular purpose, and Pasternack does not assume any liability arising out of the use of any part or documentation.

Pasternack Enterprises, Inc. • P.O. Box 16759, Irvine, CA 92623
Phone: (866) 727-8376 or (949) 261-1920 • **Fax:** (949) 261-7451
Sales@Pasternack.com • Techsupport@Pasternack.com

© 2016 Pasternack Enterprises All Rights Reserved

PE44079 CAD Drawing

N Female Connector Solder Attachment 2 Hole Flange
Mount Pin Terminal, 1.0 inch Hole Spacing

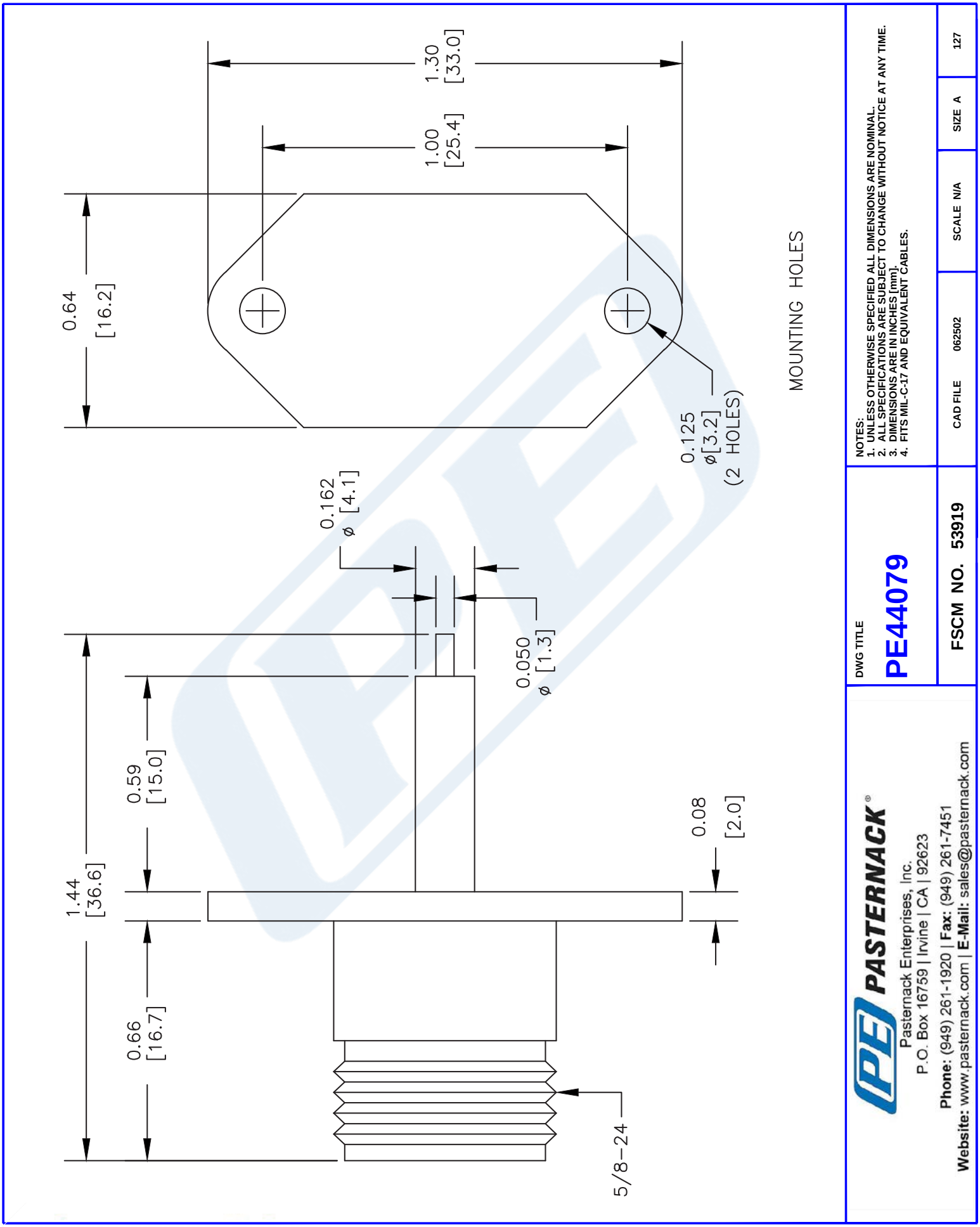

© 2016 Pasternack Enterprises All Rights Reserved