PASTERNACK
an INFINITE brand



Low Loss Flexible LMR-400-DB Outdoor/Watertight Rated Coax Cable Double Shielded with Black PE Jacket

RF Cables
Technical Data Sheet

LMR-400-DB-FT

Times Microwave Systems Coax Cable Specification

Configuration

- Low Loss, Outdoor/Watertight Flexible Cable
- 2 Shield(s)

Electrical Specifications

Description	Minimum	Typical	Maximum	Units
Frequency Range	DC		6	GHz
Cutoff Frequency		16.2		GHz
Impedance		50		Ohms
Velocity of Propagation		85		%
Time Delay		1.2 [3.94]		ns/ft [ns/m]
Shielding Effectiveness	90			dB
Dielectric Withstanding Voltage (DC)			2,500	Vdc
Jacket Spark			8,000	Vrms
Inner Conductor DC Resistance			1.39	Ohms/1000ft
Outer Conductor DC Resistance			1.65	Ohms/1000ft
Nominal Capacitance		23.9 [78.41]		pF/ft [pF/m]
Nominal Inductance		0.06 [0.2]		uH/ft [uH/m]
Input Power (Peak)			16	kWatts

Click the following link (or enter part number in “SEARCH” on website) to obtain additional part information including price, inventory and certifications: Low Loss Flexible LMR-400-DB Outdoor/Watertight Rated Coax Cable Double Shielded with Black PE Jacket LMR-400-DB-FT

Pasternack Enterprises, Inc. • P.O. Box 16759, Irvine, CA 92623
Phone: (866) 727-8376 or (949) 261-1920 • **Fax:** (949) 261-7451
Sales@Pasternack.com • Techsupport@Pasternack.com

© 2020 Pasternack Enterprises All Rights Reserved

PASTERNACK
an INFINITE brand



Low Loss Flexible LMR-400-DB Outdoor/Watertight Rated Coax Cable Double Shielded with Black PE Jacket

RF Cables
Technical Data Sheet

LMR-400-DB-FT

Performance by Frequency Band

Description	F1	F2	F3	F4	F5	Units
Frequency	50	150	220	450	900	MHz
Attenuation, Typ	0.9	1.5	1.9	2.7	3.9	dB/100ft
	2.95	4.92	6.23	8.86	12.8	dB/100m
Input Power (CW), Max	2,570	1,470	1,200	830	580	Watts

Description	F6	F7	F8	F9	F10	Units
Frequency	1.5	1.8	2	2.5	5.8	GHz
Attenuation, Typ	5.1	5.7	6	6.8	10.8	dB/100ft
	16.73	18.7	19.69	22.31	35.43	dB/100m
Input Power (CW), Max	440	400	370	330	210	Watts

Mechanical Specifications

Diameter	0.405 in [10.29 mm}
Weight	0.07 lbs/ft [0.1 kg/m]
Min. Bend Radius (Installation)	1 in [25.4 mm]
Min. Bend Radius (Repeated)	4 in [101.6 mm]
Bending Moment	0.5 lbs-ft [0.68 N-m]
Tensile Strength	160 lbs [72.57 kg]
Flat Plate Crush	40 lbs/in [0.71 kg/mm]

Construction Specifications

Description	Material and Plating	Diameter
Inner Conductor	Copper Clad Aluminum, 1 Strand	0.108 in [2.74 mm]
Conductor Type	Solid	
Dielectric	PE (F)	0.285 in [7.24 mm]
First Shield	Aluminum Tape	[ ]
Second Shield	Tinned Copper Braid	[ ]

Click the following link (or enter part number in “SEARCH” on website) to obtain additional part information including price, inventory and certifications: Low Loss Flexible LMR-400-DB Outdoor/Watertight Rated Coax Cable Double Shielded with Black PE Jacket LMR-400-DB-FT

Pasternack Enterprises, Inc. • P.O. Box 16759, Irvine, CA 92623
Phone: (866) 727-8376 or (949) 261-1920 • **Fax:** (949) 261-7451
Sales@Pasternack.com • Techsupport@Pasternack.com

© 2020 Pasternack Enterprises All Rights Reserved



Low Loss Flexible LMR-400-DB Outdoor/Watertight Rated Coax Cable Double Shielded with Black PE Jacket

RF Cables
Technical Data Sheet

LMR-400-DB-FT

Jacket	PE, Black	0.405 in [10.29 mm]

Environmental Specifications

Temperature

Operating Range	-40 to 85 deg C
Storage Range	-70 to 85 deg C

Compliance Certifications (see product page for current document)

Plotted and Other Data

Notes:

Low Loss Flexible LMR-400-DB Outdoor/Watertight Rated Coax Cable Double Shielded with Black PE Jacket from Pasternack Enterprises has same day shipment for domestic and International orders. Our RF, microwave and millimeter wave products maintain a 99.4% availability and are part of the broadest selection in the industry.

Click the following link (or enter part number in “SEARCH” on website) to obtain additional part information including price, inventory and certifications: Low Loss Flexible LMR-400-DB Outdoor/Watertight Rated Coax Cable Double Shielded with Black PE Jacket LMR-400-DB-FT

URL: https://www.pasternack.com/50-ohm-low-loss-flexible-lmr400db-pe-jacket-double-shielded-black-lmr-400-db-ft-p.aspx

The information contained in this document is accurate to the best of our knowledge and representative of the part described herein. It may be necessary to make modifications to the part and/or the documentation of the part, in order to implement improvements. Pasternack reserves the right to make such changes as required. Unless otherwise stated, all specifications are nominal. Pasternack does not make any representation or warranty regarding the suitability of the part described herein for any particular purpose, and Pasternack does not assume any liability arising out of the use of any part or documentation.

Pasternack Enterprises, Inc. • P.O. Box 16759, Irvine, CA 92623
Phone: (866) 727-8376 or (949) 261-1920 • **Fax:** (949) 261-7451
Sales@Pasternack.com • Techsupport@Pasternack.com

© 2020 Pasternack Enterprises All Rights Reserved

© 2020 Pasternack Enterprises All Rights Reserved

LMR-400-DB-FT CAD Drawing

Low Loss Flexible LMR-400-DB Outdoor/Watertight Rated Coax Cable Double Shielded with Black PE Jacket

REVISIONS			
REV.	DESCRIPTION	DATE	APPROVED
A	INITIAL RELEASE	03/14/2022	AGANWANI

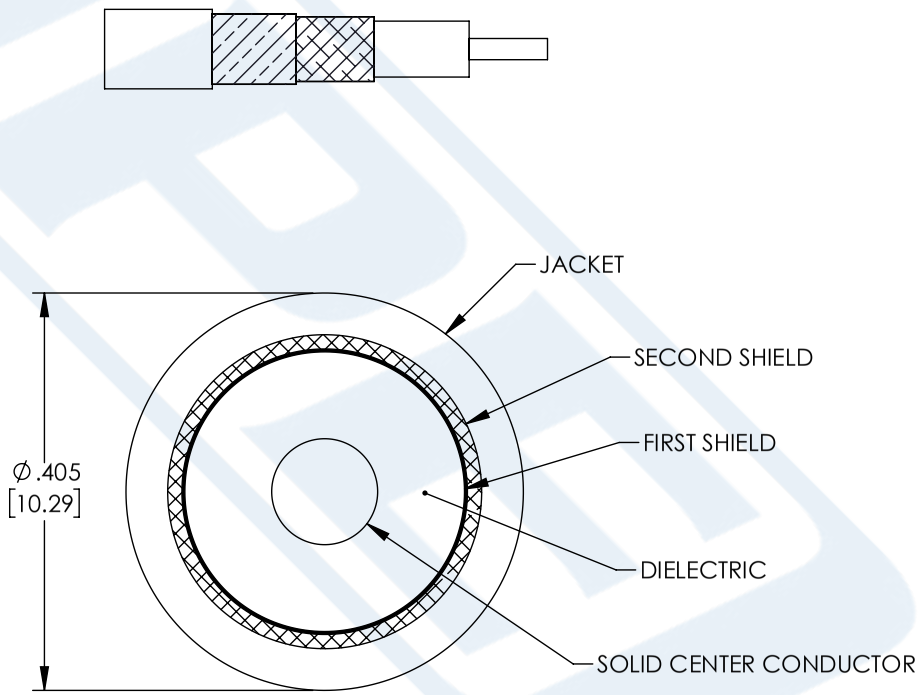

UNLESS OTHERWISE SPECIFIED
LEADING DIMENSIONS ARE INCHES
DIMENSIONS IN [ ] ARE MILLIMETERS

TOLERANCES:

.X = ± .2 [5.08]	FRACTIONS
.XX = ± .02 [.51]	± 1/32
.XXX = ± .005 [.13]	ANGLES ± 1°

CABLE LENGTH (L) TOLERANCES:

L ≤ 12 [305] = +1 [25] / -0
12 [305] < L ≤ 60 [1524] = +2 [51] / -0
60 [1524] < L ≤ 120 [3048] = +4 [102] / -0
120 [3048] < L ≤ 300 [7620] = +6 [152] / -0
300 [7620] < L = +5%L / -0

ALL DIMENSIONS SHOWN
ARE FOR REFERENCE ONLY.

PASTERNACK
an INFINITE brand

Pasternack Enterprises, Inc.
P.O.Box 16759, Irvine, CA 92623.
Phone: 1.949.261.1920 | 1.866.727.8376
Fax: 1.949.261.7451
Website: www.pasternack.com
E-mail: sales@pasternack.com

THIRD-ANGLE PROJECTION

THE INFORMATION AND DESIGN IN THIS DOCUMENT IS THE PROPERTY OF PASTERNACK CORPORATION ALL RIGHTS RESERVED.

SHEET 1 OF 1

SCALE N/A

SIZE	CAGE CODE	DRAWN BY	ITEM NO.	REV
A	53919	DZINN	LMR-400-DB-FT	A

THESE COMMODITIES, TECHNOLOGY OR SOFTWARE WERE EXPORTED FROM THE UNITED STATES IN ACCORDANCE WITH THE EXPORT ADMINISTRATION REGULATIONS. DIVERSION CONTRARY TO U.S. LAW PROHIBITED.