SMA Male to SSMB Plug Low Loss Cable Using LMR-100 Coax

TECHNICAL DATA SHEET PE3W00620

Configuration

- Connector 1: SMA Male
- Connector 2: SSMB Plug
- Cable Type: LMR-100A
- Coax Flex Type: Flexible

Features

- Max Frequency 6 GHz
- Shielding Effectivity > 90 dB
- 66% Phase Velocity
- Double Shielded
- PVC Jacket

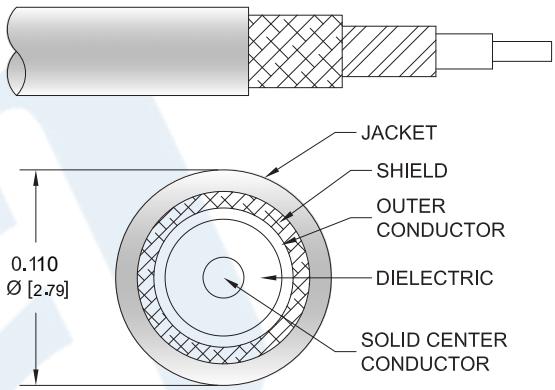

Applications

- General Purpose
- Laboratory Use

Description

Pasternack's PE3W00620 SMA male to SSMB plug cable using LMR-100 coax is part of our full line of RF components available for same-day shipping. Pasternack's flexible RF cable assemblies are ideal for applications where tight bends and flexure are required. This Pasternack SMA to SSMB cable assembly has a male to plug gender configuration with 50 ohm flexible LMR-100A coax. The PE3W00620 SMA male to SSMB plug cable assembly operates to 6 GHz. The double shielding of this Pasternack cable assembly provides excellent shielding effectiveness of better than 90 dB.

Custom versions of most RF cable assemblies can be built and shipped same day. Custom cable assembly lengths can be obtained by specifying the desired length on the web site at time of order or by contacting a sales representative. Other available RF cable assembly value added services include connector orientation or clocking, heat shrink booting and custom labeling. RF testing can also be performed to document the electrical performance of your cable assembly.

Click the following link (or enter part number in "SEARCH" on website) to obtain additional part information including price, inventory and certifications: SMA Male to SSMB Plug Low Loss Cable Using LMR-100 Coax PE3W00620

Pasternack Enterprises, Inc. • P.O. Box 16759, Irvine, CA 92623
Phone: (866) 727-8376 or (949) 261-1920 • **Fax:** (949) 261-7451
Sales@Pasternack.com • Techsupport@Pasternack.com

© 2020 Pasternack Enterprises All Rights Reserved

PASTERNACK
an INFINITE brand

SMA Male to SSMB Plug Low Loss Cable Using LMR-100 Coax

TECHNICAL DATA SHEET PE3W00620

Electrical Specifications

Description	Minimum	Typical	Maximum	Units
Frequency Range	DC		6	GHz
VSWR			1.4:1	
Velocity of Propagation		66		%
RF Shielding	90			dB
Group Delay		1.54 [5.05]		ns/ft [ns/m]
Capacitance		30.8 [101.05]		pF/ft [pF/m]
Inductance		0.077 [0.25]		uH/ft [uH/m]
DC Resistance Inner Conductor		81 [265.75]		Ω/1000ft [Ω/Km]
DC Resistance Outer Conductor		9.5 [31.17]		Ω/1000ft [Ω/Km]
Jacket Spark			2,000	Vrms

Specifications by Frequency

Part Number	Length	Description	F1	F2	F3	F4	F5	Units	Weight (lbs)
		Frequency	250	500	1000	2500	6000	MHz	
PE3W00620	Custom Lengths Available	Insertion Loss (Typ.)	0.12	0.17	0.24	0.4	0.64	dB/ft	
			0.38	0.55	0.79	1.31	2.11	dB/m	
PE3W00620-24	24 inch	Insertion Loss (Typ.)	0.43	0.53	0.68	1	1.49	dB	0.038
PE3W00620-36	36 inch	Insertion Loss (Typ.)	0.55	0.7	0.92	1.4	2.13	dB	0.047
PE3W00620-48	48 inch	Insertion Loss (Typ.)	0.66	0.86	1.16	1.8	2.77	dB	0.056
PE3W00620-100CM	100 cm	Insertion Loss (Typ.)	0.58	0.75	0.99	1.51	2.31	dB	0.05
PE3W00620-200CM	200 cm	Insertion Loss (Typ.)	0.96	1.29	1.78	2.82	4.41	dB	0.08

The insertion loss data for the base model does not include loss due to the connectors. Each length includes insertion loss due to the connectors.

Loss due to Connector 1:	0.1	dB
Loss due to Connector 2:	0.1	dB
Base Weight:	0.029	pounds
Additional Weight per Inch:	0.00075	pounds

Mechanical Specifications

Cable Assembly

Weight	0.029 lbs [13.15 g]

Click the following link (or enter part number in “SEARCH” on website) to obtain additional part information including price, inventory and certifications: SMA Male to SSMB Plug Low Loss Cable Using LMR-100 Coax PE3W00620

Pasternack Enterprises, Inc. • P.O. Box 16759, Irvine, CA 92623
Phone: (866) 727-8376 or (949) 261-1920 • **Fax:** (949) 261-7451
Sales@Pasternack.com • Techsupport@Pasternack.com

© 2020 Pasternack Enterprises All Rights Reserved

PASTERNACK
an INFINITE brand

SMA Male to SSMB Plug Low Loss Cable Using LMR-100 Coax

TECHNICAL DATA SHEET PE3W00620

Cable

Cable Type	LMR-100A
Impedance	50 Ohms
Inner Conductor Type	Solid
Inner Conductor Material and Plating	Copper Clad Steel
Dielectric Type	PE
Number of Shields	2
Shield Layer 1	Aluminum Tape
Shield Layer 2	Tinned Copper Braid
Jacket Material	PVC, Black
Jacket Diameter	0.11 in [2.79 mm]
One Time Minimum Bend Radius	0.25 in [6.35 mm]
Repeated Minimum Bend Radius	1 in [25.4 mm]
Bending Moment	0.1 lbs-ft [0.14 N-m]
Flat Plate Crush	10 lbs/in [0.18 Kg/mm]
Tensile Strength	15 lbs [6.8 Kg]

Connectors

Description	Connector 1	Connector 2
Type	SMA Male Threaded	SSMB Plug Push-On
Specification	MIL-STD-348A	MIL-STD-348A
Impedance	50 Ohms	50 Ohms
Contact Material and Plating	Brass, Gold	Beryllium Copper, Gold
Contact Plating Specification	30 µin minimum	30 µin minimum
Dielectric Type	PTFE	PTFE
Outer Conductor Material and Plating		Beryllium Copper, Gold
Outer Conductor Plating Specification		30 µin minimum
Body Material and Plating	Brass, Nickel	Brass, Gold
Body Plating Specification	100 µin minimum	30 µin minimum
Coupling Nut Material and Plating	Brass, Nickel	
Coupling Nut Plating Specification	100 µin minimum	
Hex Size	5/16 in	
Torque	5 in-lbs [0.57 Nm]	

Environmental Specifications

Temperature

Operating Range	-40 to +85 deg C

Click the following link (or enter part number in “SEARCH” on website) to obtain additional part information including price, inventory and certifications: SMA Male to SSMB Plug Low Loss Cable Using LMR-100 Coax PE3W00620

Pasternack Enterprises, Inc. • P.O. Box 16759, Irvine, CA 92623
Phone: (866) 727-8376 or (949) 261-1920 • **Fax:** (949) 261-7451
Sales@Pasternack.com • Techsupport@Pasternack.com

© 2020 Pasternack Enterprises All Rights Reserved

SMA Male to SSMB Plug Low Loss Cable Using LMR-100 Coax

TECHNICAL DATA SHEET PE3W00620

Compliance Certifications (see product page for current document)

Plotted and Other Data

Notes:

How to Order

Part Number Configuration: **PE3W00620 - xx uu**

- uu: Unit of Measure: cm = Centimeters; <blank> = Inches
- xx: Length
- PE3W00620: Base Number

Example: PE3W00620-12 = 12 inches long cable
PE3W00620-100cm = 100 cm long cable

SMA Male to SSMB Plug Low Loss Cable Using LMR-100 Coax from Pasternack Enterprises has same day shipment for domestic and International orders. Our RF, microwave and millimeter wave products maintain a 99.4% availability and are part of the broadest selection in the industry.

Click the following link (or enter part number in “SEARCH” on website) to obtain additional part information including price, inventory and certifications: SMA Male to SSMB Plug Low Loss Cable Using LMR-100 Coax PE3W00620

URL: https://www.pasternack.com/sma-male-to-ssmb-plug-low-loss-cable-using-lmr-100-pe3w00620-p.aspx

The information contained in this document is accurate to the best of our knowledge and representative of the part described herein. It may be necessary to make modifications to the part and/or the documentation of the part, in order to implement improvements. Pasternack reserves the right to make such changes as required. Unless otherwise stated, all specifications are nominal. Pasternack does not make any representation or warranty regarding the suitability of the part described herein for any particular purpose, and Pasternack does not assume any liability arising out of the use of any part or documentation.

Pasternack Enterprises, Inc. • P.O. Box 16759, Irvine, CA 92623
Phone: (866) 727-8376 or (949) 261-1920 • **Fax:** (949) 261-7451
Sales@Pasternack.com • Techsupport@Pasternack.com

© 2020 Pasternack Enterprises All Rights Reserved

PE3W00620 CAD Drawing

SMA Male to SSMB Plug Low Loss Cable Using LMR-100 Coax

REVISION					
ZONE	REV	DESCRIPTION	DATE	CHANGED BY	APPROVED
	A	INITIAL RELEASE	09/27/2023	HBAKKE	AGANWANI

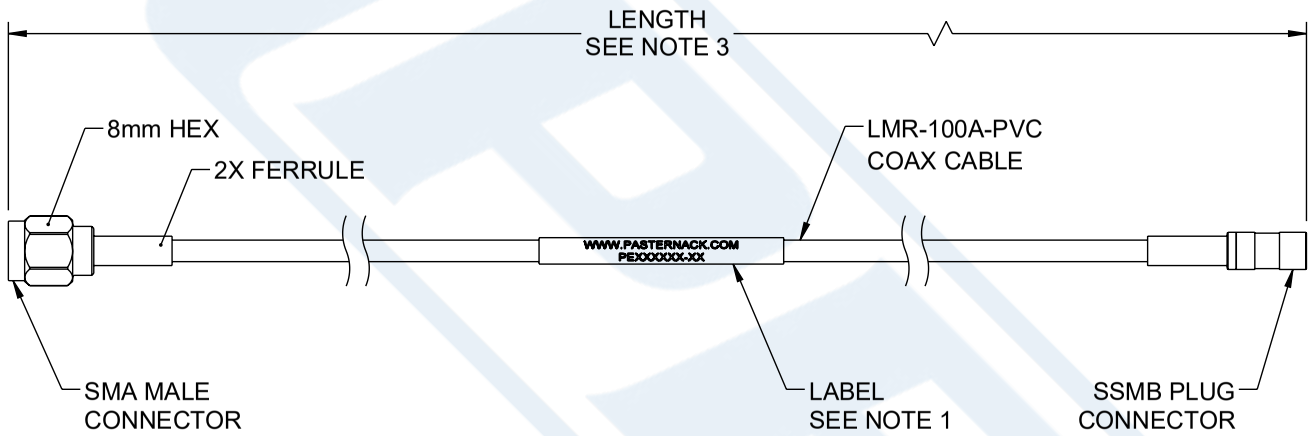

NOTES:

1. CABLE ASSEMBLY LENGTH LABEL PLACEMENT:
   36 INCHES OR LESS, ONE LABEL APPROXIMATELY CENTERED.
   LONGER THAN 36 INCHES, TWO LABELS APPROXIMATELY 6 INCHES FROM EACH CONNECTOR.
2. CABLE ASSEMBLIES SHALL BE TESTED FOR CONTINUITY.
3. CABLE ASSEMBLY LENGTH DETERMINED BY ITEM PN AND DESCRIPTION.

THE INFORMATION CONTAINED IN THIS DRAWING IS THE SOLE PROPERTY OF INFINITE ELECTRONICS, INC. ANY REPRODUCTION IN PART OR WHOLE WITHOUT THE WRITTEN PERMISSION OF INFINITE ELECTRONICS, INC. IS PROHIBITED.
THESE COMMODITIES, TECHNOLOGY OR SOFTWARE WERE EXPORTED FROM THE UNITED STATES IN ACCORDANCE WITH THE EXPORT ADMINISTRATION REGULATIONS. DIVERSION CONTRARY TO U.S. LAW PROHIBITED.

UNLESS OTHERWISE SPECIFIED
LEADING DIMENSIONS ARE INCHES
DIMENSIONS IN [ ] ARE MILLIMETERS

TOLERANCES:

.X = ±.2 [5]	FRACTIONS
.XX = ±.02 [0.5]	± 1/32
.XXX = ±.005 [0.13]	ANGLES ± 1°

CABLE LENGTH TOLERANCES:

≤12 [305] = +1 [25] / -0
>12 [305] ≤ 60 [1524] = +2 [51] / -0
>60 [1524] ≤ 120 [3048] = +4 [102] / -0
>120 [3048] ≤ 300 [7620] = +6 [152] / -0
>300 [7620] = +5% / -0

ALL DIMENSIONS ARE FOR REFERENCE ONLY AND SUBJECT TO CHANGE WITHOUT NOTICE.
UN-DIMENSIONED/NON-CRITICAL FEATURES MAY VARY IN SIZE AND LOCATION
COLORS MAY VARY

PASTERNACK® an INFINITE brand
Website: www.Pasternack.com
Phone: 1.866.727.8376 | 1.949.261.1920

INTERPRET ALL DIMENSIONS AND TOLERANCES PER ASME Y14.5

SCALE	SHEET
NONE	1 OF 1

DESCRIPTION
SMA MALE TO SSMB PLUG LOW LOSS CABLE USING LMR-100 COAX

SIZE	CAGE CODE	DRAWN BY	ITEM NO.	REV
A	53919	HBAKKE	PE3W00620	A

© 2020 Pasternack Enterprises All Rights Reserved

PE3W00620 REV 1.0

PE DS Rev-D4 Asize