PASTERNACK
an INFINITE brand

SMC Plug to SMC Plug Cable Using RG58 Coax with HeatShrink

RF Cable Assemblies Technical Data Sheet PE3W11739/HS

Configuration

- Connector 1: SMC Plug
- Connector 2: SMC Plug
- Cable Type: RG58-TPX

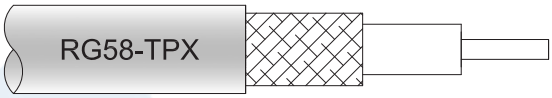

Features

- 69% Phase Velocity
- TPX Jacket

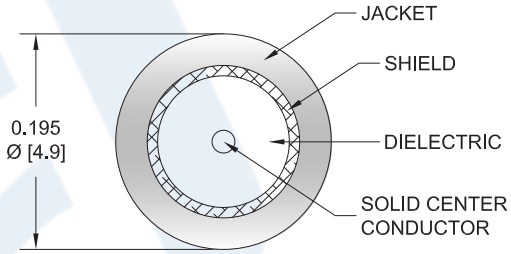

Applications

- General Purpose
- Laboratory Use

Description

Pasternack's PE3W11739/HS SMC plug to SMC plug cable using RG58 coax is part of our full line of RF components available for same-day shipping. Pasternack's flexible RF cable assemblies are ideal for applications where tight bends and flexure are required. This Pasternack SMC to SMC cable assembly has a plug to plug gender configuration with 50 ohm flexible RG58-TPX coax.

Custom versions of most RF cable assemblies can be built and shipped same day. Custom cable assembly lengths can be obtained by specifying the desired length on the web site at time of order or by contacting a sales representative. Other available RF cable assembly value added services include connector orientation or clocking, heat shrink booting and custom labeling. RF testing can also be performed to document the electrical performance of your cable assembly.

Electrical Specifications

Description	Minimum	Typical	Maximum	Units
Velocity of Propagation		69		%
Capacitance		97 [318.24]		pF/ft [pF/m]

Mechanical Specifications

Cable Assembly

Weight	0.044 lbs [19.96 g]

Cable

Cable Type	RG58-TPX

Click the following link (or enter part number in "SEARCH" on website) to obtain additional part information including price, inventory and certifications: SMC Plug to SMC Plug Cable Using RG58 Coax with HeatShrink PE3W11739/HS

Pasternack Enterprises, Inc. • P.O. Box 16759, Irvine, CA 92623
Phone: (866) 727-8376 or (949) 261-1920 • **Fax:** (949) 261-7451
Sales@Pasternack.com • Techsupport@Pasternack.com

© 2020 Pasternack Enterprises All Rights Reserved

SMC Plug to SMC Plug Cable Using RG58 Coax with HeatShrink

RF Cable Assemblies Technical Data Sheet PE3W11739/HS

Impedance	50 Ohms
Inner Conductor Type	Solid
Inner Conductor Material and Plating	Copper
Dielectric Type	TPX
Number of Shields	1
Shield Layer 1	Tinned Copper Braid
Jacket Material	TPX, Blue
Jacket Diameter	0.19 in [4.83 mm]
One Time Minimum Bend Radius	1.9 in [48.26 mm]

Connectors

Description	Connector 1	Connector 2
Type	SMC Plug	SMC Plug
Specification	MIL-STD-348	MIL-STD-348
Impedance	50 Ohms	50 Ohms
Contact Material and Plating	Gold	Gold
Contact Plating Specification	MIL-G-45204	MIL-G-45204
Dielectric Type	PTFE	PTFE
Body Material and Plating	Brass, Nickel	Brass, Nickel
Body Plating Specification	QQ-N-290	QQ-N-290

Compliance Certifications (see product page for current document)

Plotted and Other Data

Notes:

Click the following link (or enter part number in “SEARCH” on website) to obtain additional part information including price, inventory and certifications: SMC Plug to SMC Plug Cable Using RG58 Coax with HeatShrink PE3W11739/HS

Pasternack Enterprises, Inc. • P.O. Box 16759, Irvine, CA 92623
Phone: (866) 727-8376 or (949) 261-1920 • **Fax:** (949) 261-7451
Sales@Pasternack.com • Techsupport@Pasternack.com

© 2020 Pasternack Enterprises All Rights Reserved

SMC Plug to SMC Plug Cable Using RG58 Coax with HeatShrink

RF Cable Assemblies Technical Data Sheet PE3W11739/HS

How to Order

Part Number Configuration: **PE3W11739/HS - xx uu**

- uu: Unit of Measure: cm = Centimeters; <blank> = Inches
- xx: Length
- PE3W11739/HS: Base Number

Example: PE3W11739/HS-12 = 12 inches long cable
PE3W11739/HS-100cm = 100 cm long cable

SMC Plug to SMC Plug Cable Using RG58 Coax with HeatShrink from Pasternack Enterprises has same day shipment for domestic and International orders. Our RF, microwave and millimeter wave products maintain a 99.4% availability and are part of the broadest selection in the industry.

Click the following link (or enter part number in “SEARCH” on website) to obtain additional part information including price, inventory and certifications: SMC Plug to SMC Plug Cable Using RG58 Coax with HeatShrink PE3W11739/HS

URL: https://www.pasternack.com/smc-plug-to-smc-plug-cable-using-rg58-with-heatshrink-pe3w11739-hs-p.aspx

The information contained in this document is accurate to the best of our knowledge and representative of the part described herein. It may be necessary to make modifications to the part and/or the documentation of the part, in order to implement improvements. Pasternack reserves the right to make such changes as required. Unless otherwise stated, all specifications are nominal. Pasternack does not make any representation or warranty regarding the suitability of the part described herein for any particular purpose, and Pasternack does not assume any liability arising out of the use of any part or documentation.

Pasternack Enterprises, Inc. • P.O. Box 16759, Irvine, CA 92623
Phone: (866) 727-8376 or (949) 261-1920 • **Fax:** (949) 261-7451
Sales@Pasternack.com • Techsupport@Pasternack.com

© 2020 Pasternack Enterprises All Rights Reserved

PE3W11739/HS CAD Drawing

SMC Plug to SMC Plug Cable Using RG58 Coax with HeatShrink

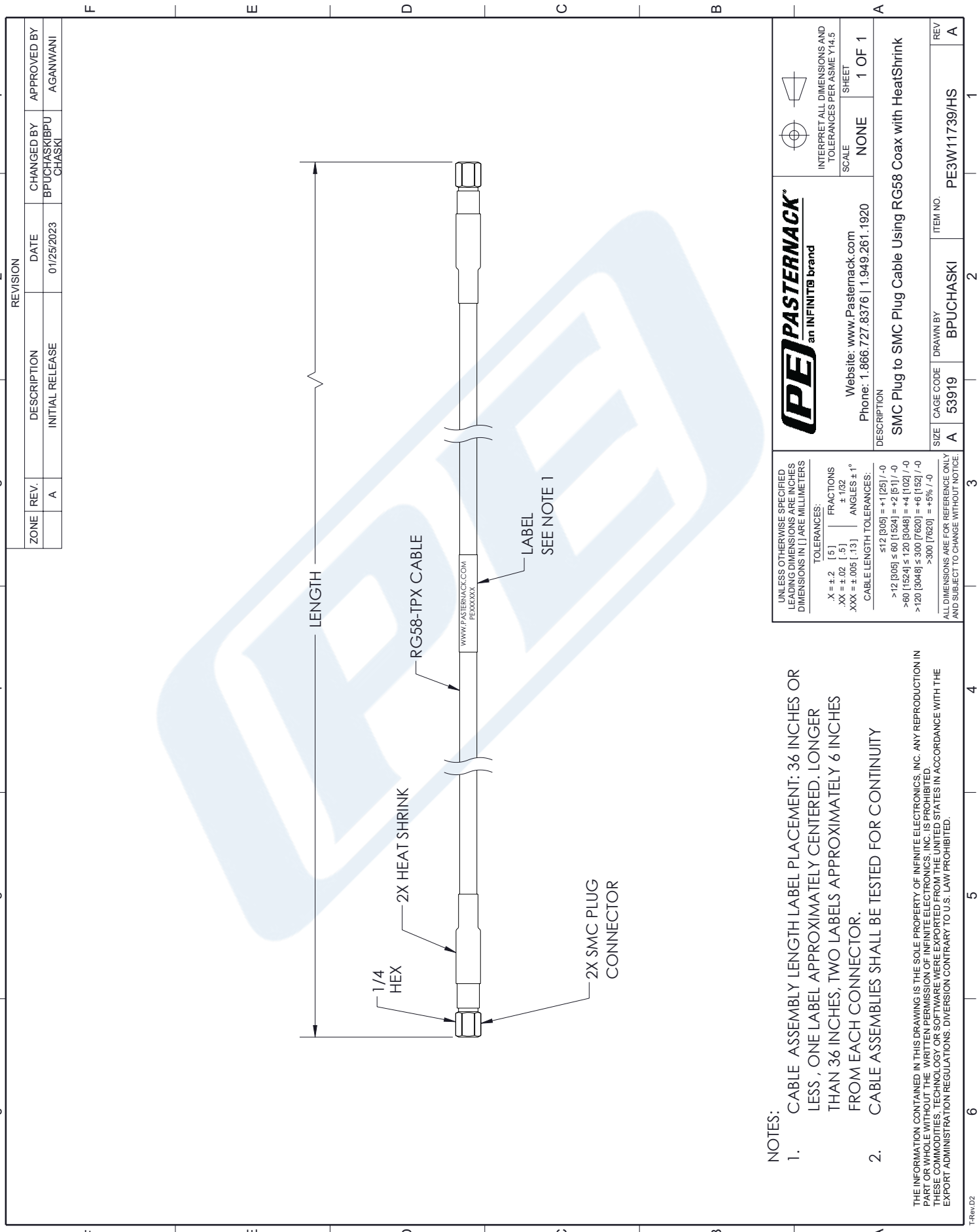

© 2020 Pasternack Enterprises All Rights Reserved