PASTERNACK®
www.pasternack.com

# QMA Female Connector Solder Attachment Surface Mount PCB

## TECHNICAL DATA SHEET PE44510

**QMA Female Connector Solder Attachment Surface Mount PCB**

### Configuration

| | |
|---|---|
| Connector | QMA Female |
| Connector Interface Type | Surface Mount |
| Cable Attachment Method (Shield/Contact) | Solder |
| Body Style | Straight |

### Electrical Specifications

| | |
|---|---|
| Frequency Range, GHz | DC to 18 |
| Impedance, Ohms | 50 |

### Mechanical Specifications

**Size**

| | |
|---|---|
| Length, in [mm] | 0.433 [11] |
| Width/Dia., in [mm] | 0.25 [6.35] |
| Height, in [mm] | 0.25 [6.35] |
| Weight, lbs [g] | 0.006 [2.72] |

**Connector**

| | |
|---|---|
| Type | QMA Female |
| Contact Material and Plating | Gold |
| Body Material and Plating | Brass, Gold |
| Dielectric Type | PTFE |

### Compliance Certifications (visit www.Pasternack.com for current document)

| | |
|---|---|
| RoHS Compliant | Yes |

### Plotted and Other Data

| | |
|---|---|
| Notes: | Values at 25 °C, sea level |

QMA Female Connector Solder Attachment Surface Mount PCB from Pasternack Enterprises has same day shipment for domestic and International orders. Our RF, microwave and fiber optic products maintain a 99% availability and are part of the broadest selection in the industry.

Click the following link (or enter part number in “SEARCH” on website) to obtain additional part information including price, inventory and certifications: QMA Female Connector Solder Attachment Surface Mount PCB PE44510

URL: http://www.pasternack.com/qma-female-standard-surface-mount-pcb-connector-pe44510-p.aspx

The information contained in this document is accurate to the best of our knowledge and representative of the part described herein. It may be necessary to make modifications to the part and/or the documentation of the part, in order to implement improvements. Pasternack reserves the right to make such changes as required. Unless otherwise stated, all specifications are nominal.

Pasternack Enterprises, Inc. • P.O. Box 16759, Irvine, CA 92623
**Phone:** (866) 727-8376 or (949) 261-1920 • **Fax:** (949) 261-7451
Sales@Pasternack.com • Techsupport@Pasternack.com

© 2013 Pasternack Enterprises All Rights Reserved

# PE44510 CAD Drawing

QMA Female Connector Solder Attachment Surface Mount PCB

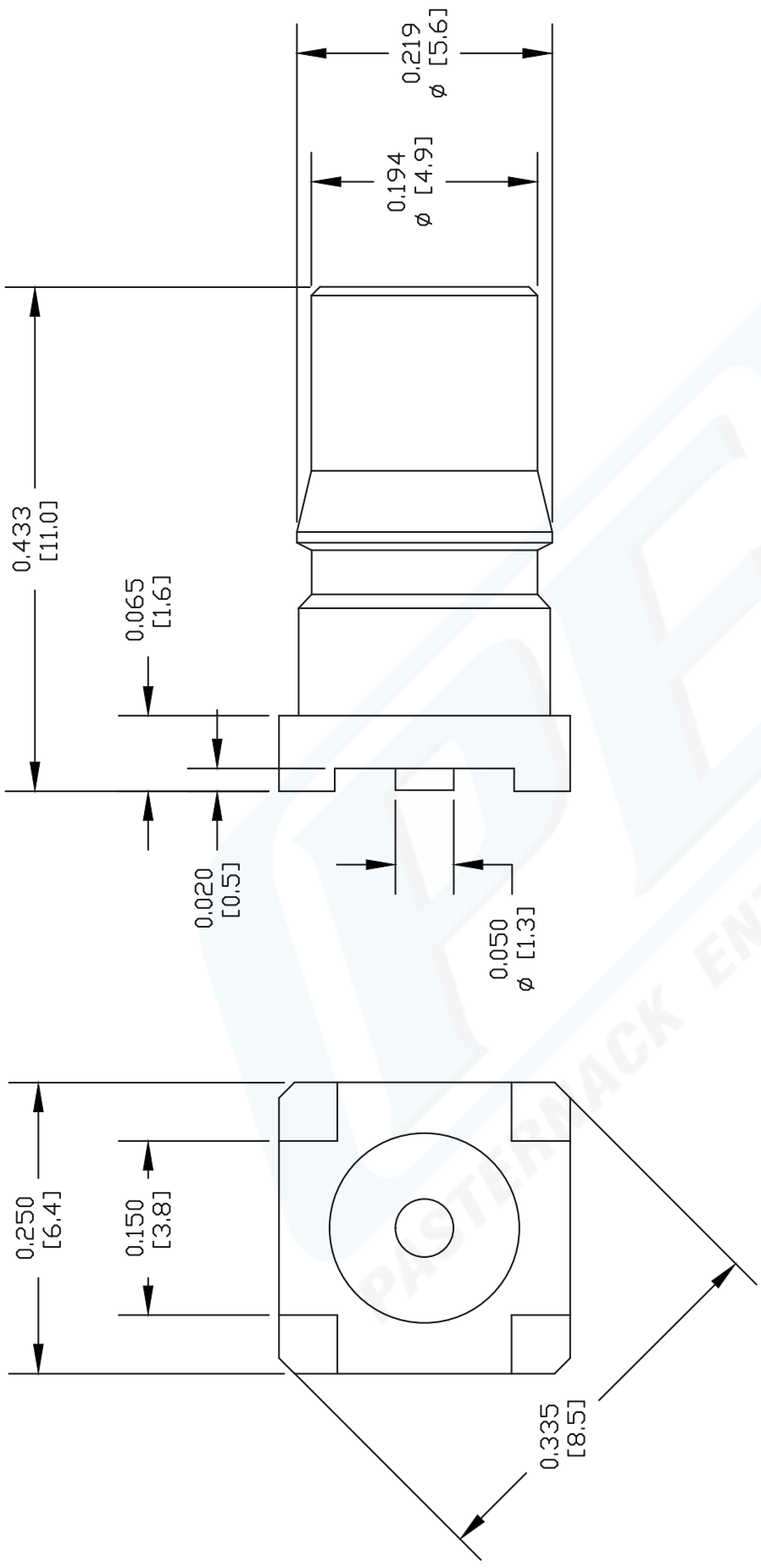


NOTES:
1. UNLESS OTHERWISE SPECIFIED ALL DIMENSIONS ARE NOMINAL.
2. ALL SPECIFICATIONS ARE SUBJECT TO CHANGE WITHOUT NOTICE AT ANY TIME.
3. DIMENSIONS ARE IN INCHES [mm].
4. FITS MIL-C-17 AND EQUIVALENT CABLES.

| DWG TITLE | CAD FILE | SCALE | SIZE |
|---|---|---|---|
| PE44510 | 022908 | N/A | A |

FSCM NO. 53919

147

PASTERNACK®
Pasternack Enterprises, Inc.
P.O. Box 16759 | Irvine | CA | 92623
**Phone:** (949) 261-1920 | **Fax:** (949) 261-7451
**Website:** www.pasternack.com | **E-Mail:** sales@pasternack.com

© 2013 Pasternack Enterprises All Rights Reserved