PASTERNACK
an INFINITE brand

WR-62 Waveguide Standard Gain Horn Antenna Operating From 12.4 GHz to 18 GHz With a Nominal 20 dB Gain N Female Input

Configuration

Design	WR-62 Standard Gain Horn
Pattern	Directional
Polarization	Linear
Coaxial Interface	N Female

Electrical Specifications

Description	Minimum	Typical	Maximum	Units
Frequency Range	12.4		18	GHz
Impedance		50		Ohms
Waveguide Standard Gain Horn				
Gain		20		dB
Horizontal Half Power Beam Width		18.9		Degrees
Vertical Half Power Beam Width		18.8		Degrees
Waveguide to Coaxial Adapter				
Input VSWR			1.3:1	

Mechanical Specifications

Size

Weight	0.455 lbs [206.38 g]

RF Connector

Type	N Female

Waveguide Interface

Waveguide Size	WR-62

Environmental Specifications

Compliance Certifications (see product page for current document)

Plotted and Other Data

2 Dimensional OML Drawing	PE9854/NF-20
Notes:	

Click the following link (or enter part number in “SEARCH” on website) to obtain additional part information including price, inventory and certifications: WR-62 Waveguide Standard Gain Horn Antenna Operating From 12.4 GHz to 18 GHz With a Nominal 20 dB Gain N Female Input PE9854/NF-20

Pasternack Enterprises, Inc. • P.O. Box 16759, Irvine, CA 92623
Phone: (866) 727-8376 or (949) 261-1920 • **Fax:** (949) 261-7451
Sales@Pasternack.com • Techsupport@Pasternack.com

© 2020 Pasternack Enterprises All Rights Reserved

WR-62 Waveguide Standard Gain Horn Antenna Operating From 12.4 GHz to 18 GHz With a Nominal 20 dB Gain N Female Input

Waveguide Antennas with Waveguide to Coax Adapt- PE9854/NF-20

WR-62 Waveguide Standard Gain Horn Antenna Operating From 12.4 GHz to 18 GHz With a Nominal 20 dB Gain N Female Input from Pasternack Enterprises has same day shipment for domestic and International orders. Our RF, microwave and millimeter wave products maintain a 99.4% availability and are part of the broadest selection in the industry.

Click the following link (or enter part number in “SEARCH” on website) to obtain additional part information including price, inventory and certifications: WR-62 Waveguide Standard Gain Horn Antenna Operating From 12.4 GHz to 18 GHz With a Nominal 20 dB Gain N Female Input PE9854/NF-20

URL: https://www.pasternack.com/standard-gain-horn-waveguide-size-wr62-20-db-gain-n-female-pe9854nf-20-p.aspx

The information contained in this document is accurate to the best of our knowledge and representative of the part described herein. It may be necessary to make modifications to the part and/or the documentation of the part, in order to implement improvements. Pasternack reserves the right to make such changes as required. Unless otherwise stated, all specifications are nominal. Pasternack does not make any representation or warranty regarding the suitability of the part described herein for any particular purpose, and Pasternack does not assume any liability arising out of the use of any part or documentation.

Pasternack Enterprises, Inc. • P.O. Box 16759, Irvine, CA 92623
Phone: (866) 727-8376 or (949) 261-1920 • **Fax:** (949) 261-7451
Sales@Pasternack.com • Techsupport@Pasternack.com

© 2020 Pasternack Enterprises All Rights Reserved

PE9854/NF-20 CAD Drawing

WR-62 Waveguide Standard Gain Horn Antenna Operating From
12.4 GHz to 18 GHz With a Nominal 20 dB Gain N Female Input

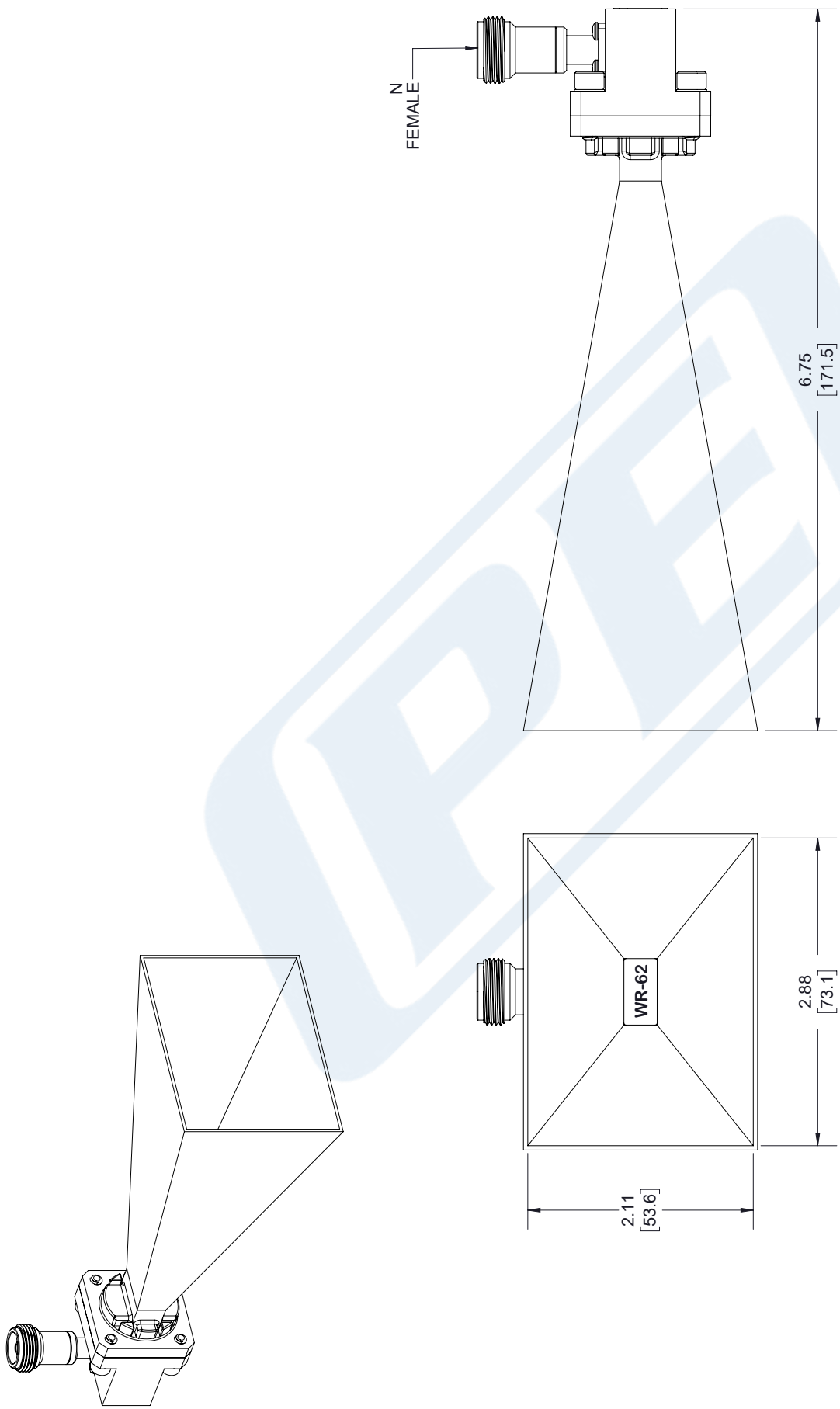

* INSIDE DIMENSION

STANDARD TOLERANCES	
.X	±0.2
.XX	±0.01
.XXX	±0.005

*STANDARD TOLERANCES APPLY ONLY TO DIMENSIONS IN INCHES

NOTES:
1. UNLESS OTHERWISE SPECIFIED ALL DIMENSIONS ARE NOMINAL.
2. ALL SPECIFICATIONS ARE SUBJECT TO CHANGE WITHOUT NOTICE AT ANY TIME
3. DIMENSIONS ARE IN INCHES [mm].

DWG TITLE
PE9854/NF-20

CAD FILE 101117 | SCALE N/A | SIZE A | 7361

CAGE CODE 53919

PASTERNACK®
THE ENGINEER'S RF SOURCE
Pasternack Enterprises, Inc.
P.O. Box 16759 | Irvine | CA | 92623
Phone: (949) 261-1920 | **Fax:** (949) 261-7451
Website: www.pasternack.com | **E-Mail:** sales@pasternack.com

© 2020 Pasternack Enterprises All Rights Reserved