PASTERNACK
an INFINITE brand

WR-51 Waveguide Isolator from 14.5 GHz to 22 GHz, 18 dB min Isolation, Cover Flange, Aluminum

Waveguide Isolators Technical Data Sheet PE-W51IR001

Features

- WR-51 Waveguide Isolator
- K Band Frequency Range 14.5 to 22 GHz
- UG Cover Flange Configuration
- Maximum VSWR 1.3:1
- Minimum 18 dB isolation
- Maximum Forward Power 50 W (CW)

Applications

- Radar Systems
- Military
- Wireless Radio Systems
- Telecom Infrastructure
- Communication Systems
- R&D Labs
- Microwave Radio Systems

Description

The PE-W51IR001 is a Waveguide Isolator offering 18 dB minimum isolation over the K band frequency range of 14.5 to 22 GHz. The design achieves high isolation with wide band performance and the WR-51 waveguide uses UG Square Cover compatible flanges on all ports and has a power rating of 50 watts (CW).

Pasternack offers a wide variety of isolators and waveguide isolators to fit your needs. These are two-port devices that transmit microwave or radio frequency power in one direction only and block the signal in the opposite direction. They can be thought of as a diode for RF energy. Isolators are used to isolate equipment from the effects of conditions outside of the equipment. For instance they are used to prevent a microwave source being detuned by a mismatched load. Pasternack's waveguide isolators feature excellent insertion loss, full WR band high isolation and reliability.

Electrical Specifications

Description	Minimum	Typical	Maximum	Units
Frequency Range	14.5		22	GHz
Insertion Loss			0.3	dB
Isolation	18			dB
VSWR			1.3:1	
Forward Power (CW)			50	Watts
Forward Power (Peak)			1	kWatts
Reverse Power (CW)			5	Watts
Reverse Power (Peak)			100	Watts

Mechanical Specifications

Size

Length	3.54 in [89.92 mm]
Width	1.77 in [44.96 mm]
Height	1.31 in [33.27 mm]
Weight	0.15 lbs [68.04 g]

Click the following link (or enter part number in "SEARCH" on website) to obtain additional part information including price, inventory and certifications: WR-51 Waveguide Isolator from 14.5 GHz to 22 GHz, 18 dB min Isolation, Cover Flange, Aluminum PE-W51IR001

Pasternack Enterprises, Inc. • P.O. Box 16759, Irvine, CA 92623
Phone: (866) 727-8376 or (949) 261-1920 • **Fax:** (949) 261-7451
Sales@Pasternack.com • Techsupport@Pasternack.com

© 2020 Pasternack Enterprises All Rights Reserved

WR-51 Waveguide Isolator from 14.5 GHz to 22 GHz, 18 dB min Isolation, Cover Flange, Aluminum

Waveguide Isolators Technical Data Sheet PE-W51IR001

Configuration

Waveguide Size	WR-51
Flange Type	Cover
Body Material and Plating	Aluminum, Chromate

Environmental Specifications

Compliance Certifications (see product page for current document)

Plotted and Other Data

Notes:

Typical Performance Data

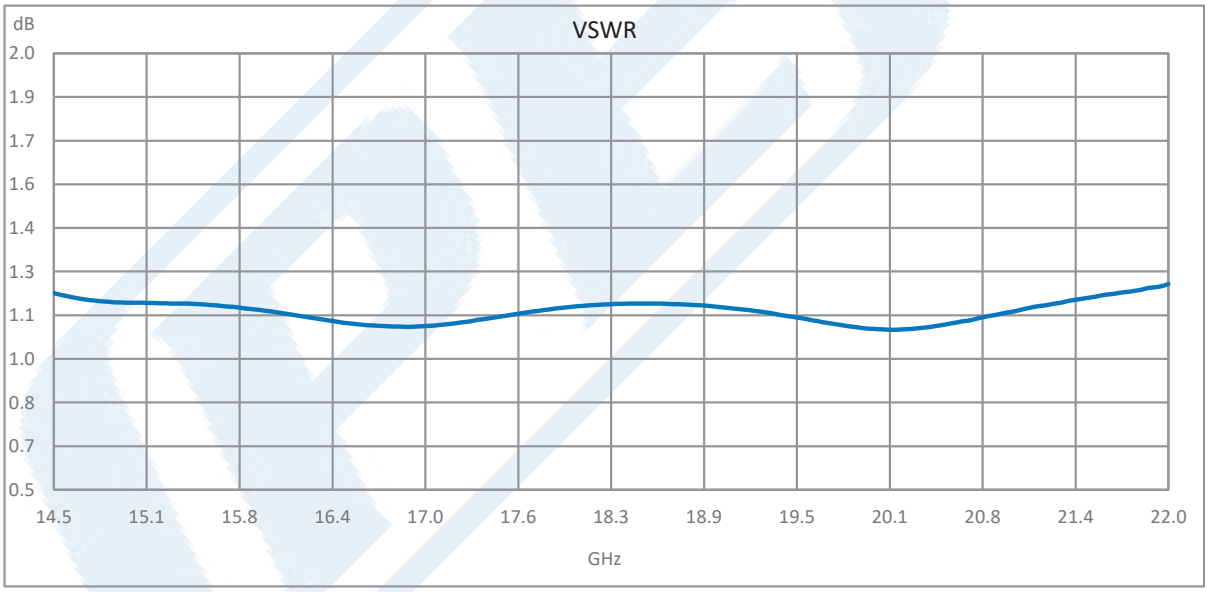

Click the following link (or enter part number in “SEARCH” on website) to obtain additional part information including price, inventory and certifications: WR-51 Waveguide Isolator from 14.5 GHz to 22 GHz, 18 dB min Isolation, Cover Flange, Aluminum PE-W51IR001

Pasternack Enterprises, Inc. • P.O. Box 16759, Irvine, CA 92623
Phone: (866) 727-8376 or (949) 261-1920 • **Fax:** (949) 261-7451
Sales@Pasternack.com • Techsupport@Pasternack.com

© 2020 Pasternack Enterprises All Rights Reserved

WR-51 Waveguide Isolator from 14.5 GHz to 22 GHz, 18 dB min Isolation, Cover Flange, Aluminum

Waveguide Isolators Technical Data Sheet PE-W51IR001

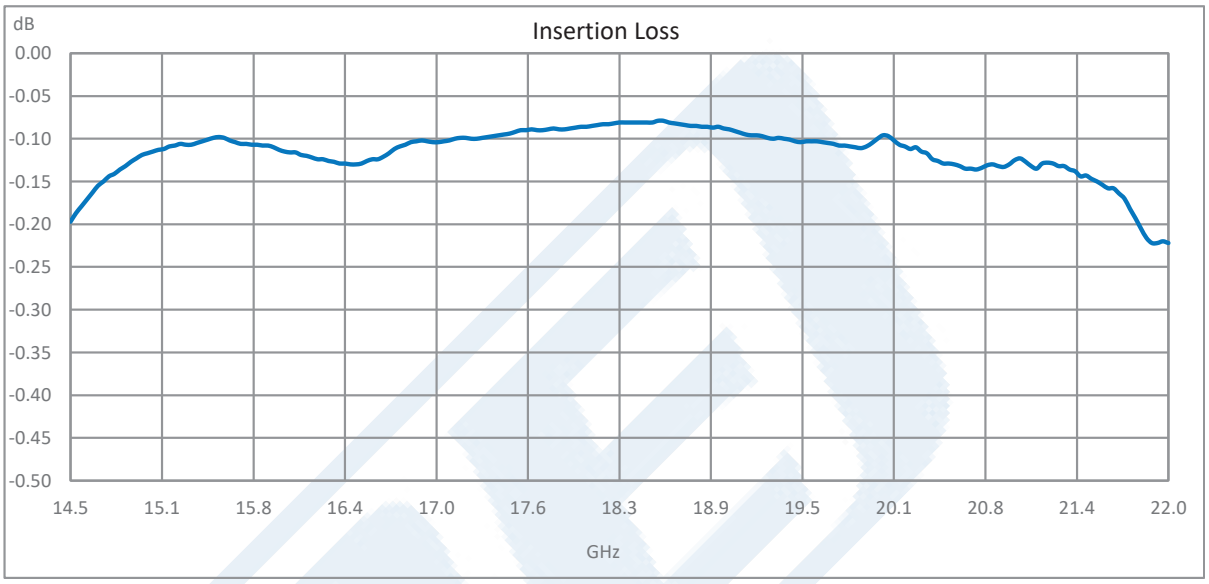

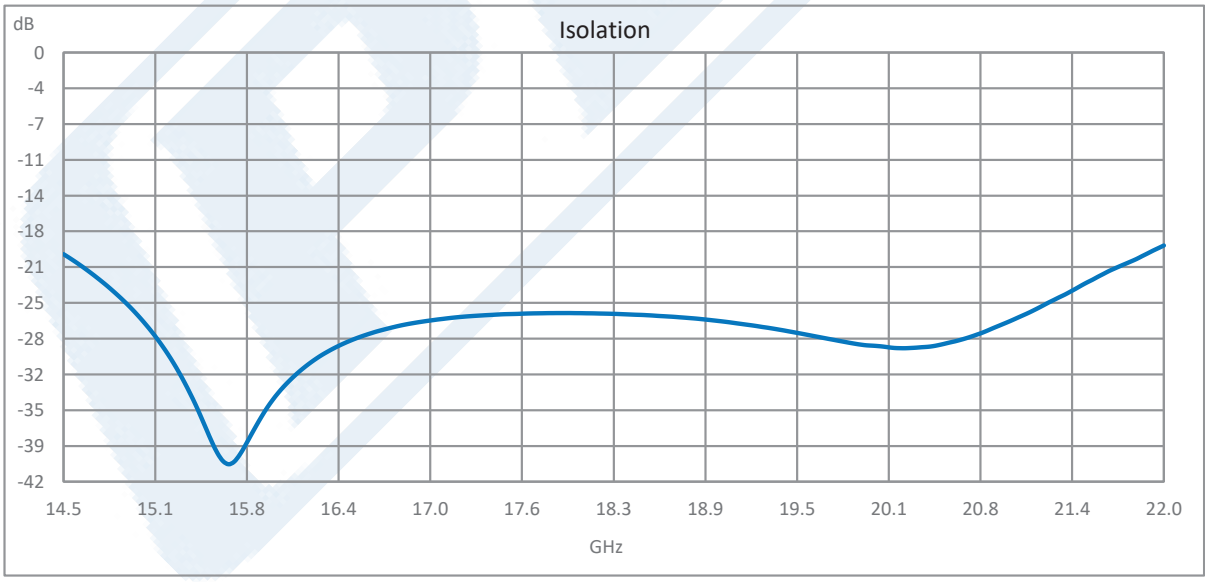

Click the following link (or enter part number in “SEARCH” on website) to obtain additional part information including price, inventory and certifications: WR-51 Waveguide Isolator from 14.5 GHz to 22 GHz, 18 dB min Isolation, Cover Flange, Aluminum PE-W51IR001

Pasternack Enterprises, Inc. • P.O. Box 16759, Irvine, CA 92623
Phone: (866) 727-8376 or (949) 261-1920 • **Fax:** (949) 261-7451
Sales@Pasternack.com • Techsupport@Pasternack.com

© 2020 Pasternack Enterprises All Rights Reserved

WR-51 Waveguide Isolator from 14.5 GHz to 22 GHz,
18 dB min Isolation, Cover Flange, Aluminum

Waveguide Isolators Technical Data Sheet PE-W51IR001

WR-51 Waveguide Isolator from 14.5 GHz to 22 GHz, 18 dB min Isolation, Cover Flange, Aluminum from Pasternack Enterprises has same day shipment for domestic and International orders. Our RF, microwave and millimeter wave products maintain a 99.4% availability and are part of the broadest selection in the industry.

Click the following link (or enter part number in “SEARCH” on website) to obtain additional part information including price, inventory and certifications: WR-51 Waveguide Isolator from 14.5 GHz to 22 GHz, 18 dB min Isolation, Cover Flange, Aluminum PE-W51IR001

URL: https://www.pasternack.com/wr51-waveguide-isolator-22ghz-18db-pe-w51ir001-p.aspx

The information contained in this document is accurate to the best of our knowledge and representative of the part described herein. It may be necessary to make modifications to the part and/or the documentation of the part, in order to implement improvements. Pasternack reserves the right to make such changes as required. Unless otherwise stated, all specifications are nominal. Pasternack does not make any representation or warranty regarding the suitability of the part described herein for any particular purpose, and Pasternack does not assume any liability arising out of the use of any part or documentation.

Pasternack Enterprises, Inc. • P.O. Box 16759, Irvine, CA 92623
Phone: (866) 727-8376 or (949) 261-1920 • **Fax:** (949) 261-7451
Sales@Pasternack.com • Techsupport@Pasternack.com

© 2020 Pasternack Enterprises All Rights Reserved

PE-W51IR001 CAD Drawing

WR-51 Waveguide Isolator from 14.5 GHz to 22 GHz, 18 dB min Isolation, Cover Flange, Aluminum

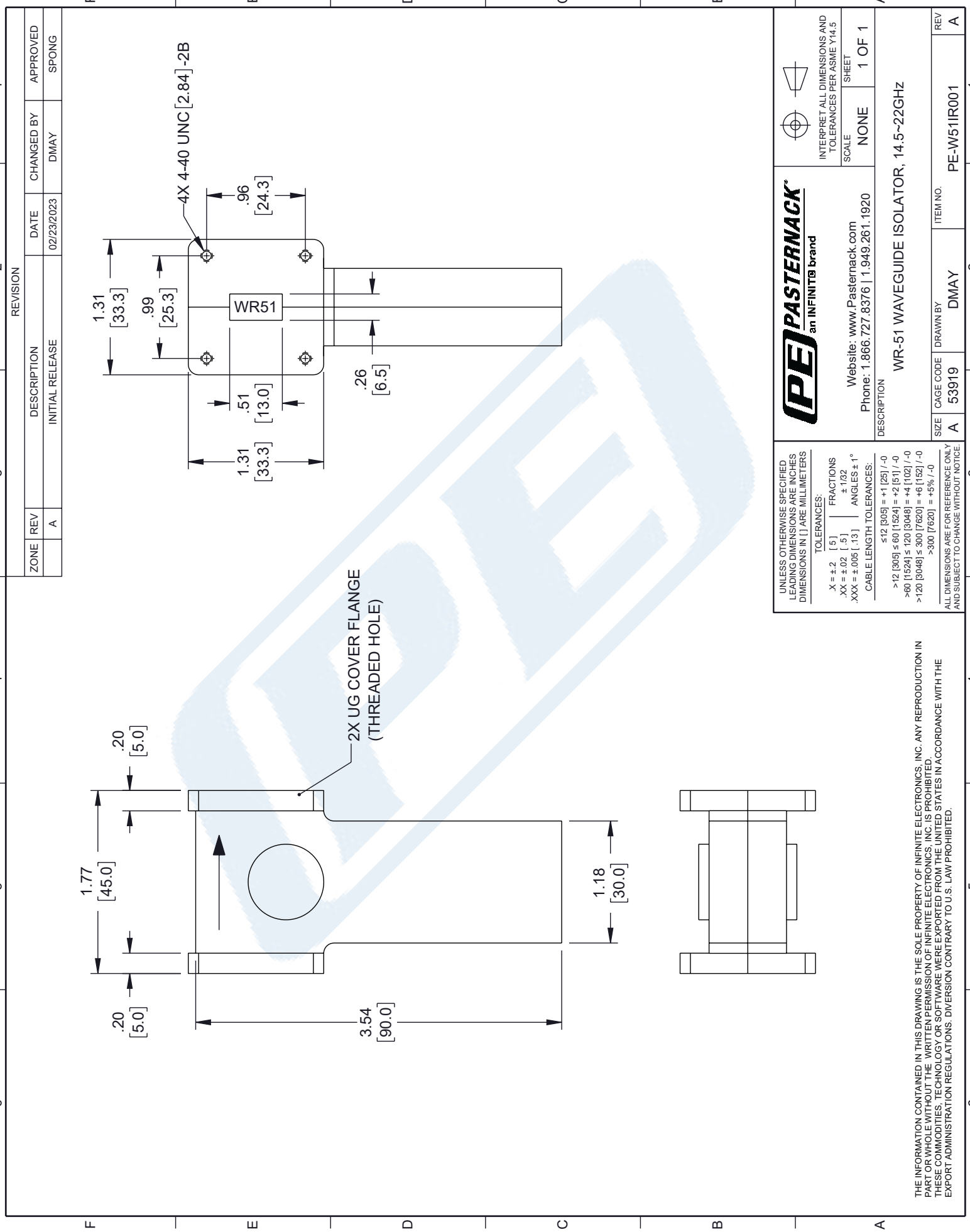

© 2020 Pasternack Enterprises All Rights Reserved