PASTERNACK
an INFINITE brand



N Female Bulkhead Mount Hermetically Sealed Connector Clamp/Solder Attachment for RG401

RF Connectors
Technical Data Sheet

PE1952

Configuration

- N Female Connector
- 50 Ohms
- Straight Body Geometry
- Connector Interface Types: RG401
- Bulkhead

Features

- Max. Operating Frequency 10 GHz
- Excellent VSWR of 1.25:1
- Gold Plated Beryllium Copper Contact
- Hermetically Sealed

Applications

- General Purpose Test
- Rack and Panel Mount Applications
- Custom Cable Assemblies

Description

Pasternack's PE1952 type N , N, Standard, Connector is part of our full line of RF components available for same-day shipping. Our type N female connector operates up to a maximum frequency of 10 GHz and offers excellent VSWR of 1.25:1. This type N bulkhead connector allows designers to create external connections on their product enclosures, and can be used in a variety of other rack mount and panel mount applications.

Our type N female bulkhead connector PE1952 datasheet specifications and drawing with dimensions are shown below in this PDF. Pasternack's broad catalog of RF, microwave and millimeter wave connectors allows designers to configure and customize their signal connections however they like. Whether the need is to provide an I/O for a board design, or simply create a custom cable assembly configuration, Pasternack has the right connector for the job. Pasternack can also expertly build your custom cable assemblies for you and ship same-day.

Electrical Specifications

Description	Minimum	Typical	Maximum	Units
Frequency Range	DC		10	GHz
VSWR			1.25:1	
Insertion Loss			0.158	dB
Operating Voltage (AC)			1,000	Vrms
Impedance		50		Ohms
Dielectric Withstanding Voltage (AC)			2,500	Vrms
Inner Conductor DC Resistance			1.5	mOhms
Outer Conductor DC Resistance			1	mOhms
Insulation Resistance	5,000			MOhms

Mechanical Specifications

Size

Length	1.21 in [30.73 mm]
Width	0.75 in [19.05 mm]

Click the following link (or enter part number in "SEARCH" on website) to obtain additional part information including price, inventory and certifications: N Female Bulkhead Mount Hermetically Sealed Connector Clamp/Solder Attachment for RG401 PE1952

Pasternack Enterprises, Inc. • P.O. Box 16759, Irvine, CA 92623
Phone: (866) 727-8376 or (949) 261-1920 • **Fax:** (949) 261-7451
Sales@Pasternack.com • Techsupport@Pasternack.com

© 2020 Pasternack Enterprises All Rights Reserved



N Female Bulkhead Mount Hermetically Sealed Connector Clamp/Solder Attachment for RG401

RF Connectors
Technical Data Sheet

PE1952

Height	0.75 in [19.05 mm]
Weight	0.09 lbs [40.82 g]
Mating Cycles	500 Cycles
Mating Torque	6 to 10 in-lbs [0.68 to 1.13 Nm]
Cable Retention Force	6.3 lbs 2.86 kg

Material Specifications

Description	Material	Plating
Contact	Beryllium Copper	Gold
Insulation	PTFE	
Body	Brass	Tri-Metal
Gasket	Silicone	

Environmental Specifications

Temperature

Operating Range	-65 to +165 deg C
Humidity	MIL-STD-202, Method106
Thermal Shock	MIL-STD-202, Method107, Condition B
Salt Spray	MIL-STD-202, Method101, Condition B
Hermetic Seal	1*10-6cc/sec helium at 1atm

Compliance Certifications (see product page for current document)

Plotted and Other Data

Notes:

Click the following link (or enter part number in “SEARCH” on website) to obtain additional part information including price, inventory and certifications: N Female Bulkhead Mount Hermetically Sealed Connector Clamp/Solder Attachment for RG401 PE1952

Pasternack Enterprises, Inc. • P.O. Box 16759, Irvine, CA 92623
Phone: (866) 727-8376 or (949) 261-1920 • **Fax:** (949) 261-7451
Sales@Pasternack.com • Techsupport@Pasternack.com

© 2020 Pasternack Enterprises All Rights Reserved

PASTERNACK
an INFINITE brand



N Female Bulkhead Mount Hermetically Sealed Connector Clamp/Solder Attachment for RG401

RF Connectors
Technical Data Sheet

PE1952

N Female Bulkhead Mount Hermetically Sealed Connector Clamp/Solder Attachment for RG401 from Pasternack Enterprises has same day shipment for domestic and International orders. Our RF, microwave and millimeter wave products maintain a 99.4% availability and are part of the broadest selection in the industry.

Click the following link (or enter part number in “SEARCH” on website) to obtain additional part information including price, inventory and certifications: N Female Bulkhead Mount Hermetically Sealed Connector Clamp/Solder Attachment for RG401 PE1952

URL: https://www.pasternack.com/n-female-rg401-connector-pe1952-p.aspx

The information contained in this document is accurate to the best of our knowledge and representative of the part described herein. It may be necessary to make modifications to the part and/or the documentation of the part, in order to implement improvements. Pasternack reserves the right to make such changes as required. Unless otherwise stated, all specifications are nominal. Pasternack does not make any representation or warranty regarding the suitability of the part described herein for any particular purpose, and Pasternack does not assume any liability arising out of the use of any part or documentation.

Pasternack Enterprises, Inc. • P.O. Box 16759, Irvine, CA 92623
Phone: (866) 727-8376 or (949) 261-1920 • **Fax:** (949) 261-7451
Sales@Pasternack.com • Techsupport@Pasternack.com

© 2020 Pasternack Enterprises All Rights Reserved

PE1952 CAD Drawing

N Female Bulkhead Mount Hermetically Sealed Connector
Clamp/Solder Attachment for RG401

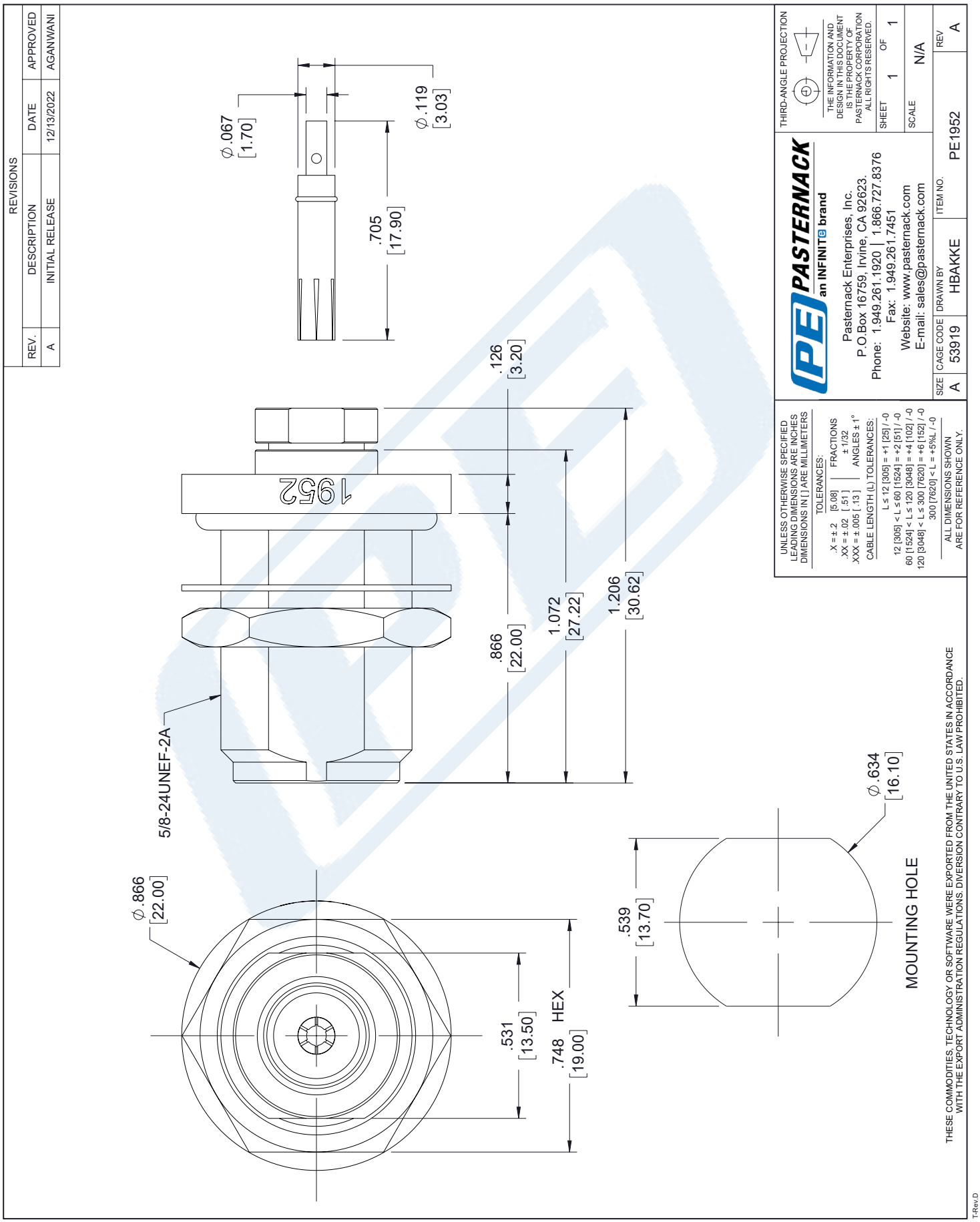

© 2020 Pasternack Enterprises All Rights Reserved