SMA Male Connector Crimp/Solder Attachment for RG174, RG316, RG188, LMR-100, PE-B100, PE-C100, .100 inch

PE4003

Configuration

- SMA Male Connector
- MIL-STD-348A
- 50 Ohms
- Straight Body Geometry
- Connector Interface Types: RG174, RG316, RG188, LMR-100, PE-B100, PE-C100, .100 inch
- 5/16 inch Hex

Features

- Max. Operating Frequency 12.4 GHz
- Excellent VSWR of 1.21:1
- Gold Plated Brass Contact
- 30 µin minimum contact plating

Applications

- General Purpose Test
- Custom Cable Assemblies

Description

Pasternack's PE4003 , SMA, Standard, Connector is part of our full line of RF components available for same-day shipping. Our SMA male connector operates up to a maximum frequency of 12.4 GHz and offers excellent VSWR of 1.21:1.

Our SMA male connector PE4003 datasheet specifications and drawing with dimensions are shown below in this PDF. Pasternack's broad catalog of RF, microwave and millimeter wave connectors allows designers to configure and customize their signal connections however they like. Whether the need is to provide an I/O for a board design, or simply create a custom cable assembly configuration, Pasternack has the right connector for the job. Pasternack can also expertly build your custom cable assemblies for you and ship same-day.

Electrical Specifications

Description	Minimum	Typical	Maximum	Units
Frequency Range	DC		12.4	GHz
VSWR			1.21:1	
Operating Voltage (AC)			335	Vrms
Impedance		50		Ohms

Mechanical Specifications

Size	
Length	0.87 in [22.1 mm]
Width	0.315 in [8.00 mm]
Height	4.2 in [106.68 mm]
Weight	0.012 lbs [5.44 g]
Mating Cycles	500 Cycles
Mating Torque	3 to 5 in-lbs [[0.34 to 0.57 Nm]]

© 2023 Infinite Electronics, Inc. Pasternack is a registered trademark of Infinite Electronics, Inc.
+1 (866) 558-2786 | sales@pasternack.com | pasternack.com

SMA Male Connector Crimp/Solder Attachment for RG174, RG316, RG188, LMR-100, PE-B100, PE-C100, .100 inch

PE4003

Material Specifications

Description	Material	Plating
Contact	Brass	Gold 30 µin minimum
Insulation	PTFE	
Body	Brass	Nickel 100 µin minimum
Coupling Nut	Brass	Nickel 100 µin minimum
Crimp Sleeve	Brass	Nickel

Environmental Specifications

Temperature

Operating Range	-65 to +165 deg C

Compliance Certifications (see product page for current document)

Plotted and Other Data

Notes:

SMA Male Connector Crimp/Solder Attachment for RG174, RG316, RG188, LMR-100, PE-B100, PE-C100, .100 inch from Pasternack Enterprises has same day shipment for domestic and International orders. Our RF, microwave and millimeter wave products maintain a 99.4% availability and are part of the broadest selection in the industry.

Click the following link (or enter part number in "SEARCH" on website) to obtain additional part information including price, inventory and certifications: SMA Male Connector Crimp/Solder Attachment for RG174, RG316, RG188, LMR-100, PE-B100, PE-C100, .100 inch PE4003

URL: https://www.pasternack.com/sma-male-rg174-rg316-lmr-100-pe-b100-pe-c100-connector-pe4003-p.aspx

The information contained within this document is accurate to the best of our knowledge and representative of the part described herein. It may be necessary to make modifications to the part and/or the documentation of the part in order to impliment improvements. Pasternack Enterprises reserves the right to make such changes as required. Unless otherwise stated, all specifications are nominal. Pasternack Enterprises does not make any representation or warranty regarding the suitability of the part described herein for any particular purpose, and Pasternack Enterprises does not assume liability arising out of the use of any part or document.

© 2023 Infinite Electronics, Inc. Pasternack is a registered trademark of Infinite Electronics, Inc.

PE4003 CAD Drawing

SMA Male Connector Crimp/Solder Attachment for RG174, RG316, RG188, LMR-100, PE-B100, PE-C100, .100 inch

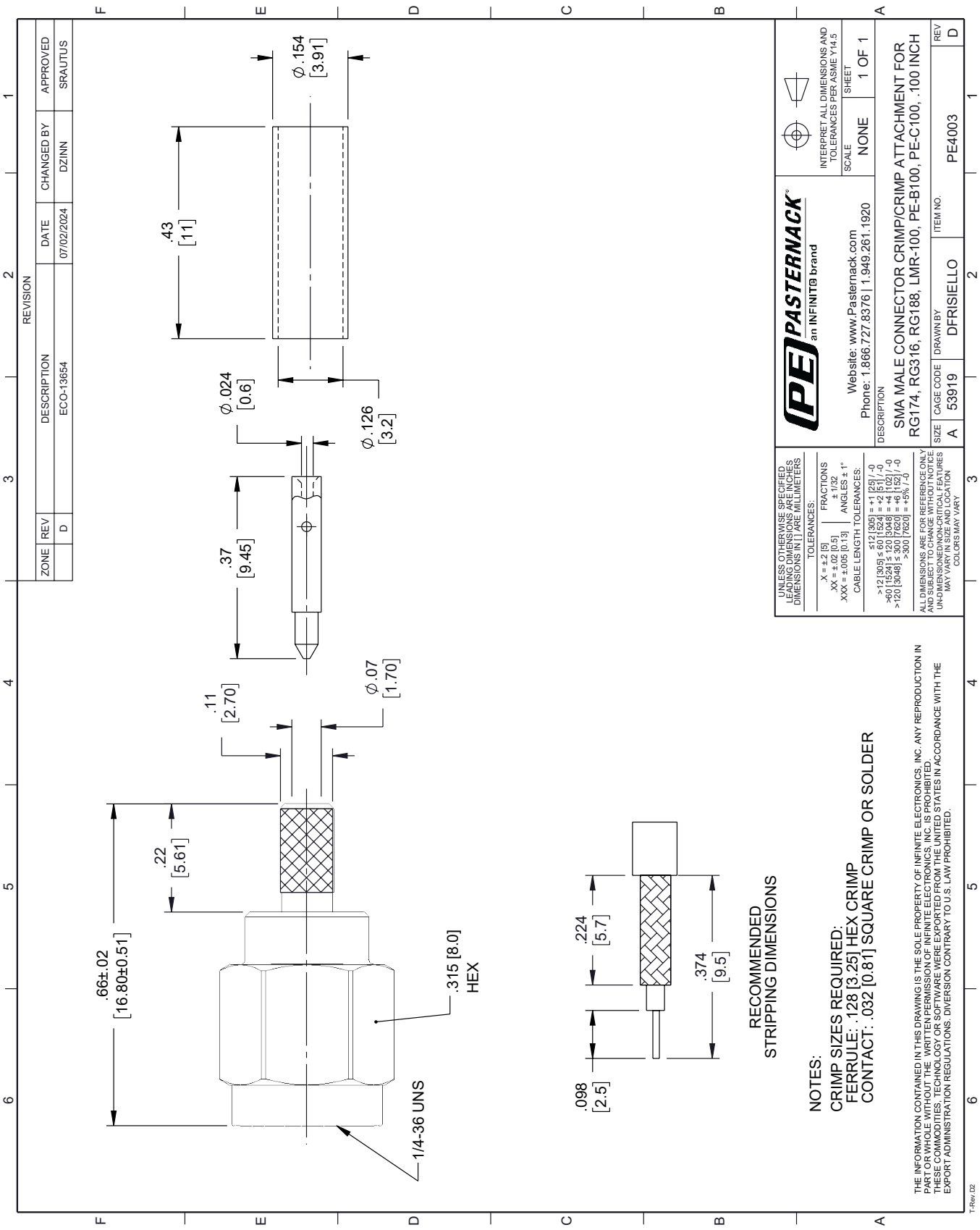

© 2023 Infinite Electronics, Inc. Pasternack is a registered trademark of Infinite Electronics, Inc.

PASTERNACK
an INFINITE brand

SMB Jack Bulkhead Mount Connector Crimp/ Solder Attachment for RG174, RG316, RG188, LMR-100, PE-B100, PE-C100, 0.100 inch

RF Connectors
Technical Data Sheet

PE4097

Configuration

- SMB Jack Connector
- MIL-STD-348A
- 50 Ohms
- Straight Body Geometry
- Connector Interface Types: RG174, RG316, RG188, LMR-100, PE-B100, PE-C100, .100 inch
- Bulkhead

Features

- Max. Operating Frequency 4 GHz
- Good VSWR of 1.3:1
- Gold Plated Brass Contact
- 30 µin minimum contact plating

Applications

- General Purpose Test
- Rack and Panel Mount Applications
- Custom Cable Assemblies

Description

Pasternack's PE4097 SMB jack bulkhead connector with crimp/solder attachment for RG174, RG316, RG188, LMR-100, PE-B100, PE-C100 and .100 inch is part of our full line of RF components available for same-day shipping. Our SMB jack connector operates up to a maximum frequency of 4 GHz and offers good VSWR of 1.3:1. This SMB bulkhead connector allows designers to create external connections on their product enclosures, and can be used in a variety of other rack mount and panel mount applications.

Our SMB jack bulkhead connector PE4097 datasheet specifications and drawing with dimensions are shown below in this PDF. Pasternack's broad catalog of RF, microwave and millimeter wave connectors allows designers to configure and customize their signal connections however they like. Whether the need is to provide an I/O for a board design, or simply create a custom cable assembly configuration, Pasternack has the right connector for the job. Pasternack can also expertly build your custom cable assemblies for you and ship same-day.

Electrical Specifications

Description	Minimum	Typical	Maximum	Units
Frequency Range	DC		4	GHz
VSWR			1.3:1	
Operating Voltage (AC)			335	Vrms

Mechanical Specifications

Size

Length	0.867 in [22.02 mm]
Width/Dia.	0.25 in [6.35 mm]
Height	0 in [0 mm]
Weight	0.005 lbs [2.27 g]

Click the following link (or enter part number in "SEARCH" on website) to obtain additional part information including price, inventory and certifications: SMB Jack Bulkhead Mount Connector Crimp/Solder Attachment for RG174, RG316, RG188, LMR-100, PE-B100, PE-C100, 0.100 inch PE4097

Pasternack Enterprises, Inc. • P.O. Box 16759, Irvine, CA 92623
Phone: (866) 727-8376 or (949) 261-1920 • **Fax:** (949) 261-7451
Sales@Pasternack.com • Techsupport@Pasternack.com

© 2020 Pasternack Enterprises All Rights Reserved

SMB Jack Bulkhead Mount Connector Crimp/ Solder Attachment for RG174, RG316, RG188, LMR-100, PE-B100, PE-C100, 0.100 inch

RF Connectors
Technical Data Sheet

PE4097

Material Specifications

Description	Material	Plating
Contact	Brass	Gold 30 µin minimum
Insulation	PTFE	
Body	Brass	Nickel 100 µin minimum

Environmental Specifications

Temperature

Operating Range -65 to +165 deg C

Compliance Certifications (see product page for current document)

Plotted and Other Data

Notes:

SMB Jack Bulkhead Mount Connector Crimp/Solder Attachment for RG174, RG316, RG188, LMR-100, PE-B100, PE-C100, 0.100 inch from Pasternack Enterprises has same day shipment for domestic and International orders. Our RF, microwave and millimeter wave products maintain a 99.4% availability and are part of the broadest selection in the industry.

Click the following link (or enter part number in “SEARCH” on website) to obtain additional part information including price, inventory and certifications: SMB Jack Bulkhead Mount Connector Crimp/Solder Attachment for RG174, RG316, RG188, LMR-100, PE-B100, PE-C100, 0.100 inch PE4097

URL: https://www.pasternack.com/smb-jack-standard-rg174-rg316-rg188-connector-pe4097-p.aspx

The information contained in this document is accurate to the best of our knowledge and representative of the part described herein. It may be necessary to make modifications to the part and/or the documentation of the part, in order to implement improvements. Pasternack reserves the right to make such changes as required. Unless otherwise stated, all specifications are nominal. Pasternack does not make any representation or warranty regarding the suitability of the part described herein for any particular purpose, and Pasternack does not assume any liability arising out of the use of any part or documentation.

Pasternack Enterprises, Inc. • P.O. Box 16759, Irvine, CA 92623
Phone: (866) 727-8376 or (949) 261-1920 • **Fax:** (949) 261-7451
Sales@Pasternack.com • Techsupport@Pasternack.com

© 2020 Pasternack Enterprises All Rights Reserved

PE4097 CAD Drawing

SMB Jack Bulkhead Mount Connector Crimp/Solder Attachment for
RG174, RG316, RG188, LMR-100, PE-B100, PE-C100, 0.100 inch

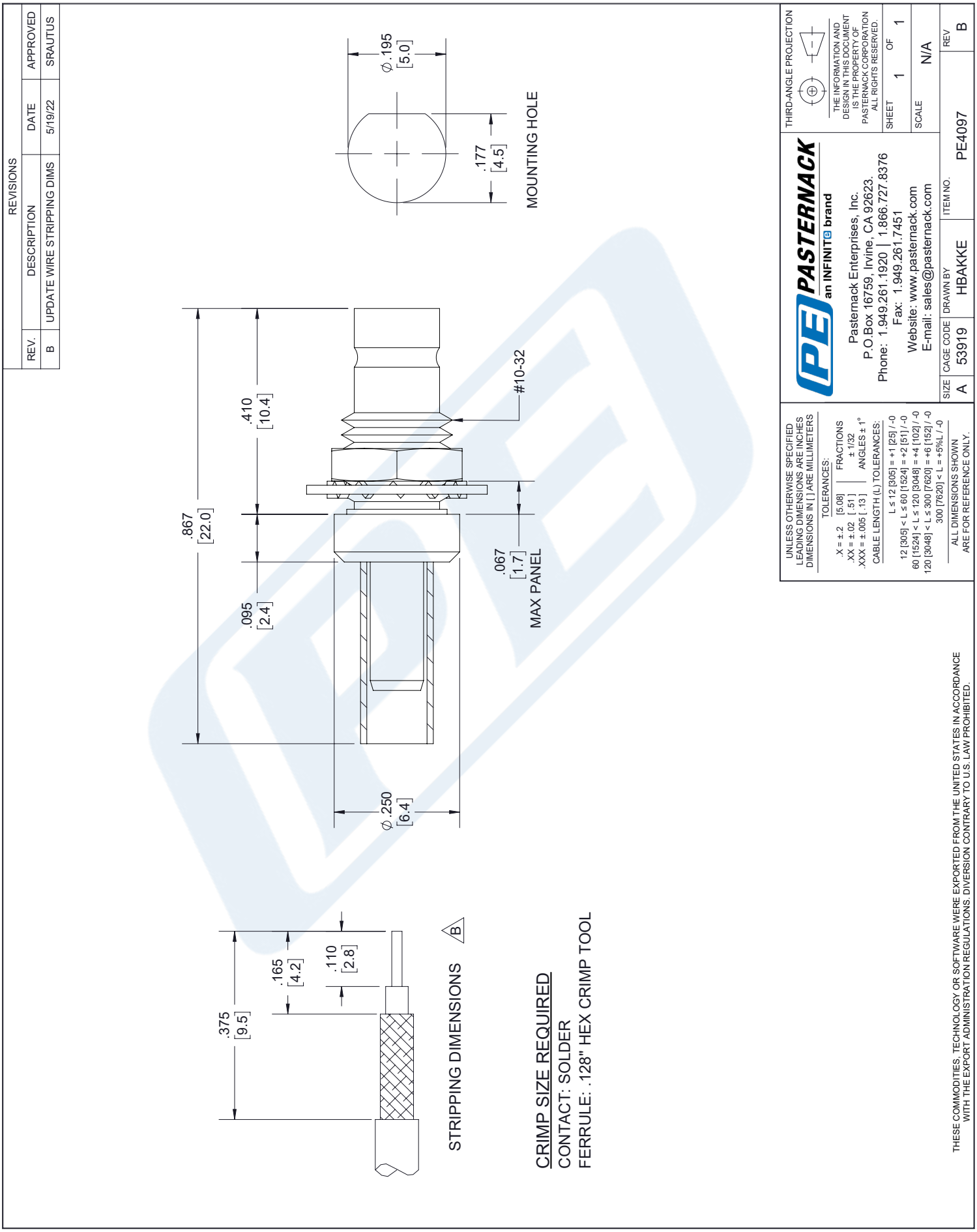

© 2020 Pasternack Enterprises All Rights Reserved

PASTERNACK
an INFINITE brand

Flexible RG174 Coax Cable Single Shielded with Black PVC Jacket

RF Cables
Technical Data Sheet

TIMES MICROWAVE SYSTEMS An Amphenol Company

RG174A/U

Times Microwave Systems Coax Cable Specification

Configuration

- Flexible Cable
- 1 Shield(s)

Electrical Specifications

Description	Minimum	Typical	Maximum	Units
Frequency Range	DC		1,000	MHz
Impedance		50		Ohms
Velocity of Propagation		66		%
Nominal Capacitance		31.08 [101.97]		pF/ft [pF/m]
Power@ 1GHz			17	Watts

Performance by Frequency Band

Description	F1	F2	F3	F4	F5	Units
Frequency	100	400	1,000			MHz
Attenuation, Typ	8.4	19	32			dB/100ft
	27.56	62.34	104.99			dB/100m

Mechanical Specifications

Diameter	0.11 in [2.79 mm}
Weight	0.009 lbs/ft [0.01 kg/m]

Construction Specifications

Description	Material and Plating	Diameter
Inner Conductor	Copper Clad Steel, 7 Strands	0.019 in [0.48 mm]
Conductor Type	Stranded	
Dielectric	PE	0.06 in [1.52 mm]
First Shield	Tinned Copper Braid	0.078 in [1.98 mm]

Click the following link (or enter part number in “SEARCH” on website) to obtain additional part information including price, inventory and certifications: Flexible RG174 Coax Cable Single Shielded with Black PVC Jacket RG174A/U

Pasternack Enterprises, Inc. • P.O. Box 16759, Irvine, CA 92623
Phone: (866) 727-8376 or (949) 261-1920 • **Fax:** (949) 261-7451
Sales@Pasternack.com • Techsupport@Pasternack.com

© 2020 Pasternack Enterprises All Rights Reserved

Flexible RG174 Coax Cable Single Shielded with Black PVC Jacket

Jacket	PVC, Black	0.11 in [2.79 mm]

Environmental Specifications

Temperature

Operating Range	-40 to +80 deg C

Compliance Certifications (see product page for current document)

Plotted and Other Data

Notes:

Flexible RG174 Coax Cable Single Shielded with Black PVC Jacket from Pasternack Enterprises has same day shipment for domestic and International orders. Our RF, microwave and millimeter wave products maintain a 99.4% availability and are part of the broadest selection in the industry.

Click the following link (or enter part number in “SEARCH” on website) to obtain additional part information including price, inventory and certifications: Flexible RG174 Coax Cable Single Shielded with Black PVC Jacket RG174A/U

URL: https://www.pasternack.com/flexible-0.100-rg174-50-ohm-coax-cable-pvc-jacket-rg174a-u-p.aspx

The information contained in this document is accurate to the best of our knowledge and representative of the part described herein. It may be necessary to make modifications to the part and/or the documentation of the part, in order to implement improvements. Pasternack reserves the right to make such changes as required. Unless otherwise stated, all specifications are nominal. Pasternack does not make any representation or warranty regarding the suitability of the part described herein for any particular purpose, and Pasternack does not assume any liability arising out of the use of any part or documentation.

Pasternack Enterprises, Inc. • P.O. Box 16759, Irvine, CA 92623
Phone: (866) 727-8376 or (949) 261-1920 • **Fax:** (949) 261-7451
Sales@Pasternack.com • Techsupport@Pasternack.com

© 2020 Pasternack Enterprises All Rights Reserved

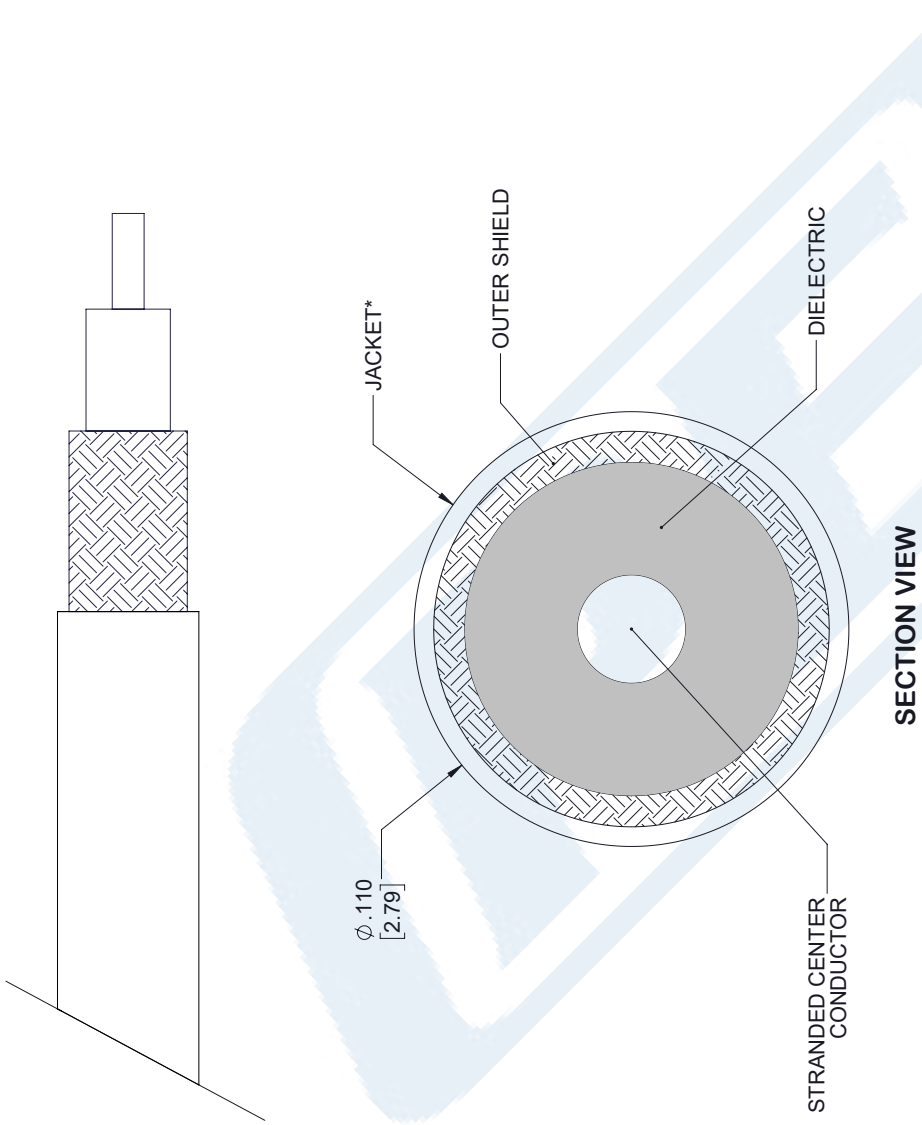

NOTE:
*STANDARD TOLERANCES APPLY ONLY TO DIMENSIONS IN INCHES

STANDARD TOLERANCES	
.X	±0.2
.XX	±0.01
.XXX	±0.005

NOTES:
1. UNLESS OTHERWISE SPECIFIED ALL DIMENSIONS ARE NOMINAL.
2. ALL SPECIFICATIONS ARE SUBJECT TO CHANGE WITHOUT NOTICE AT ANY TIME
3. DIMENSIONS ARE IN INCHES [mm].

DWG TITLE RG174A/U

CAD FILE 05/25/18 | SCALE N/A | SIZE A | 7361

CAGE CODE 53919

PASTERNACK® THE ENGINEER'S RF SOURCE
Pasternack Enterprises, Inc.
P.O. Box 16759 | Irvine | CA | 92623
Phone: (949) 261-1920 | **Fax:** (949) 261-7451
Website: www.pasternack.com | **E-Mail:** sales@pasternack.com

© 2020 Pasternack Enterprises All Rights Reserved