PASTERNACK®
THE ENGINEER'S RF SOURCE

75 Ohm N Female Connector Clamp/Solder Attachment for RG6

Configuration

- N Female Connector
- MIL-STD-348
- 75 Ohms
- Straight Body Geometry
- RG6 Interface Type
- Clamp/Solder Attachment

Features

- Silver Plated Contact
- Contact plating according to QQ-S-365

Applications

- General Purpose Test
- Custom Cable Assemblies

Description

Pasternack's PE4514 75 ohm type N female connector clamp/solder attachment for RG6 is part of our full line of RF components available for same-day shipping.

Our 75 ohm type N female connector PE4514 datasheet specifications and drawing with dimensions are shown below in this PDF. Pasternack's broad catalog of RF, microwave and millimeter wave connectors allows designers to configure and customize their signal connections however they like. Whether the need is to provide an I/O for a board design, or simply create a custom cable assembly configuration, Pasternack has the right connector for the job. Pasternack can also expertly build your custom cable connector assemblies for you and ship same-day.

Mechanical Specifications

Size

Length	1.59 in [40.39 mm]
Width/Dia.	0.75 in [19.05 mm]
Weight	0.082 lbs [37.19 g]

Material Specifications

Description	Material	Plating
Contact		Silver QQ-S-365
Insulation	PTFE	
Body	Brass	Nickel QQ-N-290

Environmental Specifications

Temperature

Operating Range	-65 to +165 deg C

Click the following link (or enter part number in "SEARCH" on website) to obtain additional part information including price, inventory and certifications: 75 Ohm N Female Connector Clamp/Solder Attachment for RG6 PE4514

Pasternack Enterprises, Inc. • P.O. Box 16759, Irvine, CA 92623
Phone: (866) 727-8376 or (949) 261-1920 • **Fax:** (949) 261-7451
Sales@Pasternack.com • Techsupport@Pasternack.com

© 2016 Pasternack Enterprises All Rights Reserved

75 Ohm N Female Connector Clamp/Solder Attachment for RG6

Compliance Certifications (see product page for current document)

Plotted and Other Data

Notes:

75 Ohm N Female Connector Clamp/Solder Attachment for RG6 from Pasternack Enterprises has same day shipment for domestic and International orders. Our RF, microwave and millimeter wave products maintain a 99% availability and are part of the broadest selection in the industry.

Click the following link (or enter part number in "SEARCH" on website) to obtain additional part information including price, inventory and certifications: 75 Ohm N Female Connector Clamp/Solder Attachment for RG6 PE4514

URL: https://www.pasternack.com/n-female-standard-rg6-connector-pe4514-p.aspx

The information contained in this document is accurate to the best of our knowledge and representative of the part described herein. It may be necessary to make modifications to the part and/or the documentation of the part, in order to implement improvements. Pasternack reserves the right to make such changes as required. Unless otherwise stated, all specifications are nominal. Pasternack does not make any representation or warranty regarding the suitability of the part described herein for any particular purpose, and Pasternack does not assume any liability arising out of the use of any part or documentation.

Pasternack Enterprises, Inc. • P.O. Box 16759, Irvine, CA 92623
Phone: (866) 727-8376 or (949) 261-1920 • **Fax:** (949) 261-7451
Sales@Pasternack.com • Techsupport@Pasternack.com

© 2016 Pasternack Enterprises All Rights Reserved

PE4514 CAD Drawing

75 Ohm N Female Connector Clamp/Solder Attachment for RG6

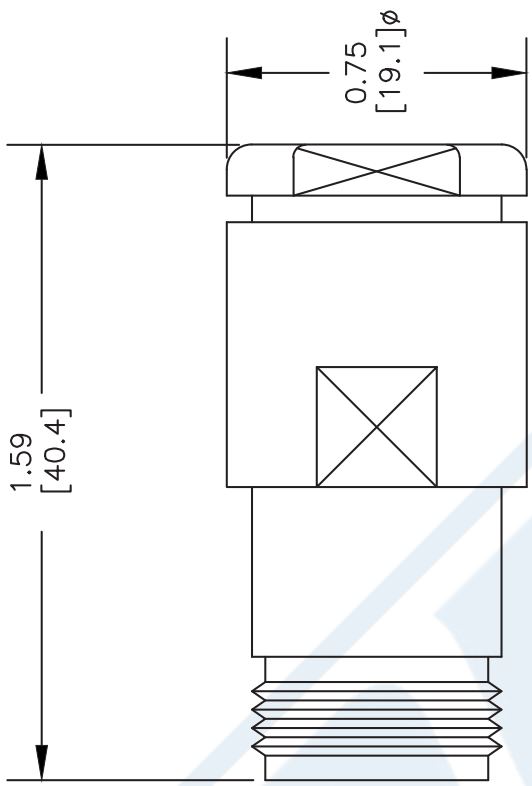

ASSEMBLY PROCEDURES

SLIDE CLAMP NUT (1) & GASKET (2) OVER CABLE. STRIP CABLE AS SHOWN. DO NOT NICK BRAID WHILE CUTTING JACKET. TAPER END OF BRAID TO PERMIT ASSEMBLY OF BRAID CLAMP (3) SLIDE BRAID CLAMP(3) OVER BRAID & SEAT AGAINST CABLE.

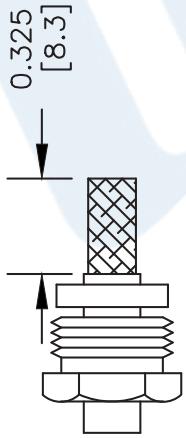

FORM BRAID OVER CLAMP NUT (3). TRIM BRAID BACK TO SHOULDER. CUT DIELECTRIC TO DIMENSION SHOWN. DO NOT NICK CENTER CONDUCTOR. SOLDER CONTACT TO CENTER CONDUCTOR. REMOVE EXCESS SOLDER. DO NOT OVER HEAT DIELECTRIC. INSERT CABLE ASSEMBLY INTO BODY & TIGHTEN.

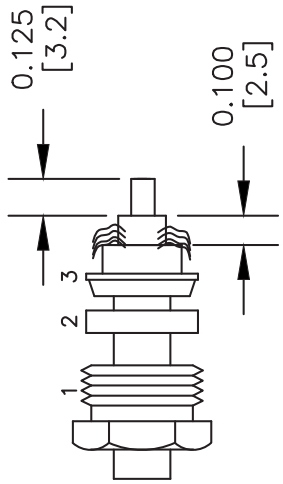

NOTES:
1. UNLESS OTHERWISE SPECIFIED ALL DIMENSIONS ARE NOMINAL.
2. ALL SPECIFICATIONS ARE SUBJECT TO CHANGE WITHOUT NOTICE AT ANY TIME.
3. DIMENSIONS ARE IN INCHES [mm].
4. FITS MIL-C-17 AND EQUIVALENT CABLES.

DWG TITLE
PE4514

FSCM NO. 53919

CAD FILE 052002 | SCALE N/A | SIZE A | XXXX

PASTERNACK®
Pasternack Enterprises, Inc.
P.O. Box 16759 | Irvine | CA | 92623
Phone: (949) 261-1920 | **Fax:** (949) 261-7451
Website: www.pasternack.com | **E-Mail:** sales@pasternack.com

© 2016 Pasternack Enterprises All Rights Reserved

PASTERNACK®
THE ENGINEER'S RF SOURCE

75 Ohm F Male Connector Crimp/Crimp Attachment for RG6

RF Connectors Technical Data Sheet PE44312

Configuration

- F Male Connector
- 75 Ohms
- Straight Body Geometry
- RG6 Interface Type
- Crimp/Crimp Attachment
- 7/16 inch Hex

Features

- Nickel Plated Brass Contact
- 100 µin minimum contact plating

Applications

- General Purpose Test
- Custom Cable Assemblies

Description

Pasternack's PE44312 75 ohm type F male connector crimp/crimp attachment for RG6 is part of our full line of RF components available for same-day shipping.

Our 75 ohm type F male connector PE44312 datasheet specifications and drawing with dimensions are shown below in this PDF. Pasternack's broad catalog of RF, microwave and millimeter wave connectors allows designers to configure and customize their signal connections however they like. Whether the need is to provide an I/O for a board design, or simply create a custom cable assembly configuration, Pasternack has the right connector for the job. Pasternack can also expertly build your custom cable connector assemblies for you and ship same-day.

Mechanical Specifications

Size	
Length	0.779 in [19.79 mm]
Width/Dia.	0.438 in [11.13 mm]
Weight	0.018 lbs [8.16 g]
Mating Torque	12 to 15 in-lbs [1.36 to 1.70 Nm]

Material Specifications

Description	Material	Plating
Contact	Brass	Nickel 100 µin minimum
Body	Brass	Nickel 100 µin minimum
Coupling Nut	Brass	Nickel 100 µin minimum

Click the following link (or enter part number in "SEARCH" on website) to obtain additional part information including price, inventory and certifications: 75 Ohm F Male Connector Crimp/Crimp Attachment for RG6 PE44312

Pasternack Enterprises, Inc. • P.O. Box 16759, Irvine, CA 92623
Phone: (866) 727-8376 or (949) 261-1920 • **Fax:** (949) 261-7451
Sales@Pasternack.com • Techsupport@Pasternack.com

© 2016 Pasternack Enterprises All Rights Reserved

75 Ohm F Male Connector Crimp/Crimp Attachment for RG6

Environmental Specifications

Temperature

Operating Range	-40 to +85 deg C

Compliance Certifications (see product page for current document)

Plotted and Other Data

Notes:

75 Ohm F Male Connector Crimp/Crimp Attachment for RG6 from Pasternack Enterprises has same day shipment for domestic and International orders. Our RF, microwave and millimeter wave products maintain a 99% availability and are part of the broadest selection in the industry.

Click the following link (or enter part number in "SEARCH" on website) to obtain additional part information including price, inventory and certifications: 75 Ohm F Male Connector Crimp/Crimp Attachment for RG6 PE44312

URL: https://www.pasternack.com/f-male-standard-rg6-connector-pe44312-p.aspx

The information contained in this document is accurate to the best of our knowledge and representative of the part described herein. It may be necessary to make modifications to the part and/or the documentation of the part, in order to implement improvements. Pasternack reserves the right to make such changes as required. Unless otherwise stated, all specifications are nominal. Pasternack does not make any representation or warranty regarding the suitability of the part described herein for any particular purpose, and Pasternack does not assume any liability arising out of the use of any part or documentation.

Pasternack Enterprises, Inc. • P.O. Box 16759, Irvine, CA 92623
Phone: (866) 727-8376 or (949) 261-1920 • **Fax:** (949) 261-7451
Sales@Pasternack.com • Techsupport@Pasternack.com

© 2016 Pasternack Enterprises All Rights Reserved

PE44312 CAD Drawing

75 Ohm F Male Connector Crimp/Crimp Attachment for RG6

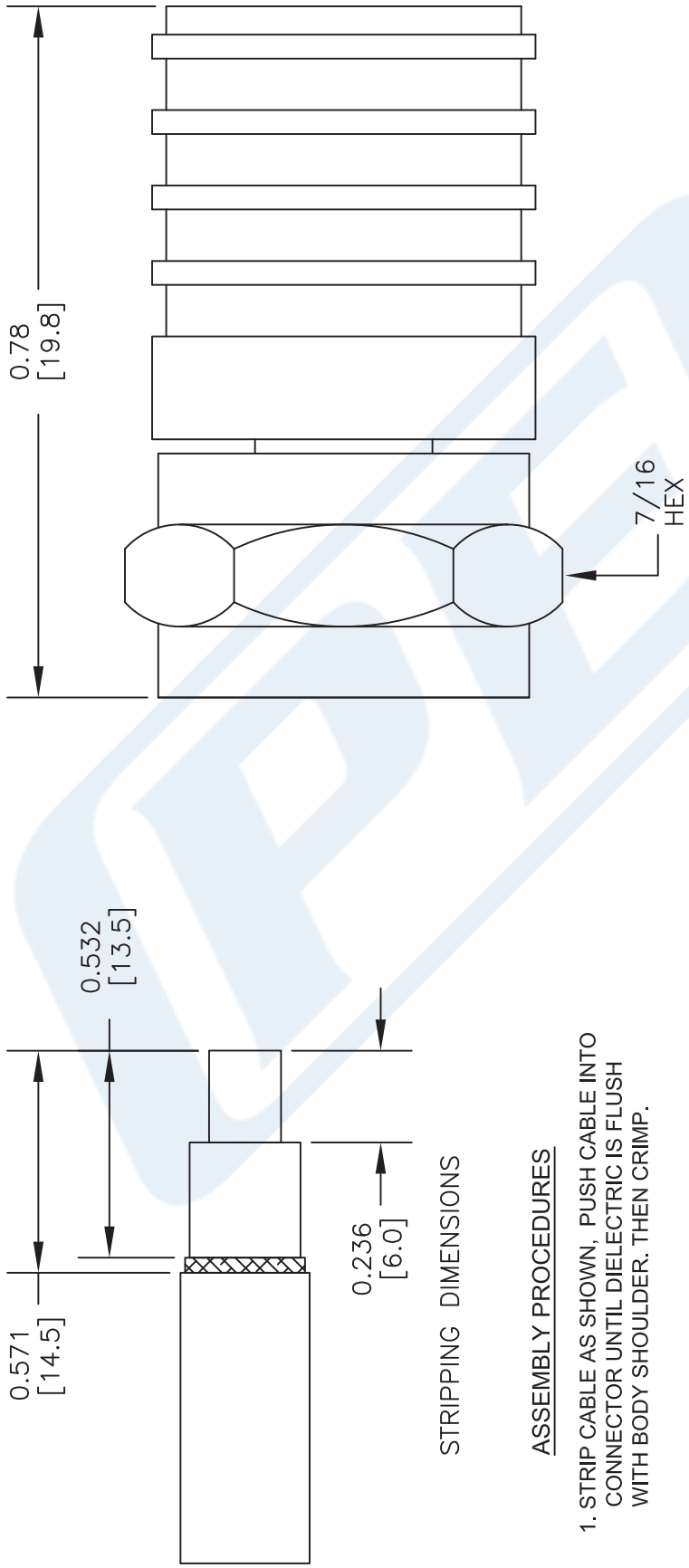

STRIPPING DIMENSIONS

ASSEMBLY PROCEDURES

1. STRIP CABLE AS SHOWN, PUSH CABLE INTO CONNECTOR UNTIL DIELECTRIC IS FLUSH WITH BODY SHOULDER. THEN CRIMP.

CRIMP SIZE REQUIRED

FERRULE: .384" HEX CRIMP TOOL

NOTES:
1. UNLESS OTHERWISE SPECIFIED ALL DIMENSIONS ARE NOMINAL.
2. ALL SPECIFICATIONS ARE SUBJECT TO CHANGE WITHOUT NOTICE AT ANY TIME.
3. DIMENSIONS ARE IN INCHES [mm].
4. FITS MIL-C-17 AND EQUIVALENT CABLES.

DWG TITLE
PE44312

FSCM NO. 53919

CAD FILE 091113 | SCALE N/A | SIZE A | 2233

PASTERNACK®
Pasternack Enterprises, Inc.
P.O. Box 16759 | Irvine | CA | 92623
Phone: (949) 261-1920 | **Fax:** (949) 261-7451
Website: www.pasternack.com | **E-Mail:** sales@pasternack.com

© 2016 Pasternack Enterprises All Rights Reserved

PASTERNACK®
THE ENGINEER'S RF SOURCE

75 Ohm Flexible RG6 Coax Cable Double Shielded with Black PVC (NC) Jacket

Configuration

- Flexible Cable
- 2 Shield(s)

Electrical Specifications

Description	Minimum	Typical	Maximum	Units
Frequency Range	DC		1,000	MHz
Impedance		75		Ohms
Velocity of Propagation		66		%
Shielding Effectiveness	90			dB
Operating Voltage (DC)			2,700	Vdc
Nominal Capacitance		20.6 [67.59]		pF/ft [pF/m]

Performance by Frequency Band

Description	F1	F2	F3	F4	F5	Units
Frequency	10	100	1,000			MHz
Attenuation, Typ	0.08	2.9	11			dB/100ft
	0.26	9.51	36.09			dB/100m

Mechanical Specifications

Diameter	0.332 in [8.43 mm]
Weight	0.085 lbs/ft [0.13 Kg/m]
Min. Bend Radius (Repeated)	3.5 in [88.9 mm]

Construction Specifications

Description	Material and Plating	Diameter
Inner Conductor	Copper Clad Steel, 1 Strands	0.029 in [0.74 mm]
Conductor Type	Solid	
Dielectric	PE	0.185 in [4.7 mm]
First Shield	Silver Plated Copper Braid	

Click the following link (or enter part number in "SEARCH" on website) to obtain additional part information including price, inventory and certifications: 75 Ohm Flexible RG6 Coax Cable Double Shielded with Black PVC (NC) Jacket RG6A/U

Pasternack Enterprises, Inc. • P.O. Box 16759, Irvine, CA 92623
Phone: (866) 727-8376 or (949) 261-1920 • **Fax:** (949) 261-7451
Sales@Pasternack.com • Techsupport@Pasternack.com

© 2017 Pasternack Enterprises All Rights Reserved

75 Ohm Flexible RG6 Coax Cable Double Shielded with Black PVC (NC) Jacket

Second Shield	Copper Braid	0.248 in [6.3 mm]
Jacket	PVC (NC), Black	0.332 in [8.43 mm]

Environmental Specifications

Temperature

Operating Range -40 to +80 deg C

Compliance Certifications (see product page for current document)

Plotted and Other Data

Notes:

75 Ohm Flexible RG6 Coax Cable Double Shielded with Black PVC (NC) Jacket from Pasternack Enterprises has same day shipment for domestic and International orders. Our RF, microwave and millimeter wave products maintain a 99% availability and are part of the broadest selection in the industry.

Click the following link (or enter part number in "SEARCH" on website) to obtain additional part information including price, inventory and certifications: 75 Ohm Flexible RG6 Coax Cable Double Shielded with Black PVC (NC) Jacket RG6A/U

URL: https://www.pasternack.com/flexible-0.332-rg6-75-ohm-coax-cable-pvc-jacket-rg6a-u-p.aspx

The information contained in this document is accurate to the best of our knowledge and representative of the part described herein. It may be necessary to make modifications to the part and/or the documentation of the part, in order to implement improvements. Pasternack reserves the right to make such changes as required. Unless otherwise stated, all specifications are nominal. Pasternack does not make any representation or warranty regarding the suitability of the part described herein for any particular purpose, and Pasternack does not assume any liability arising out of the use of any part or documentation.

Pasternack Enterprises, Inc. • P.O. Box 16759, Irvine, CA 92623
Phone: (866) 727-8376 or (949) 261-1920 • **Fax:** (949) 261-7451
Sales@Pasternack.com • Techsupport@Pasternack.com

© 2017 Pasternack Enterprises All Rights Reserved

RG6A/U CAD Drawing

75 Ohm Flexible RG6 Coax Cable Double Shielded with Black PVC (NC) Jacket

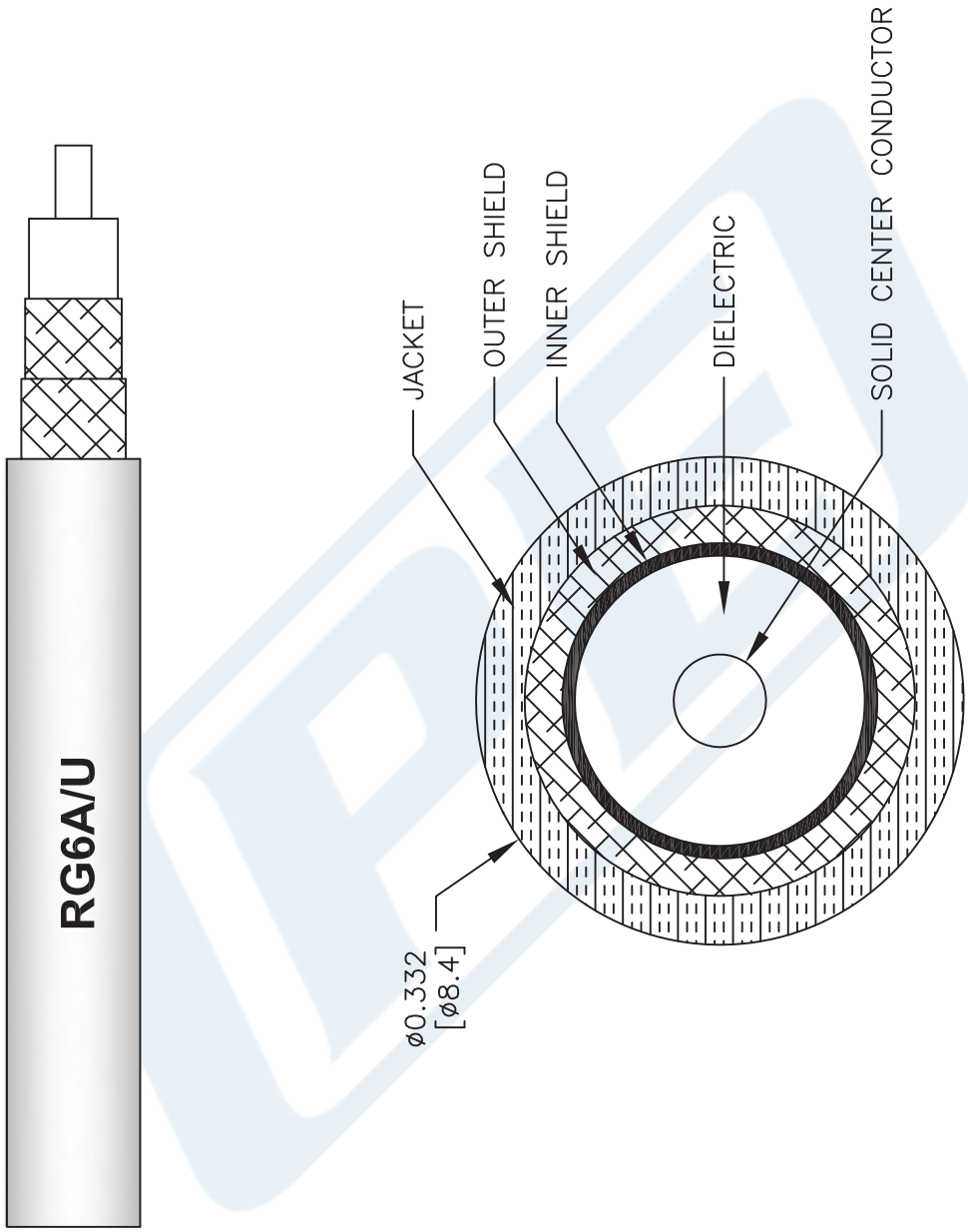

NOTES:
1. UNLESS OTHERWISE SPECIFIED ALL DIMENSIONS ARE NOMINAL.
2. ALL SPECIFICATIONS ARE SUBJECT TO CHANGE WITHOUT NOTICE AT ANY TIME.
3. DIMENSIONS ARE IN INCHES [mm].

DWG TITLE
RG6A/U

FSCM NO. 53919

CAD FILE 111816 | SCALE N/A | SIZE A | 41742

PASTERNACK®
THE ENGINEER'S RF SOURCE
Pasternack Enterprises, Inc.
P.O. Box 16759 | Irvine | CA | 92623
Phone: (949) 261-1920 | **Fax:** (949) 261-7451
Website: www.pasternack.com | **E-Mail:** sales@pasternack.com

© 2017 Pasternack Enterprises All Rights Reserved