PASTERNACK®
THE ENGINEER'S RF SOURCE

MCX Plug Connector Crimp/Solder Attachment for RG178, RG196

RF Connectors Technical Data Sheet PE4552

Configuration

- MCX Plug Connector
- CECC 22220
- 50 Ohms
- Straight Body Geometry
- RG178, RG196 Interface Type
- Crimp/Solder Attachment

Features

- Max. Operating Frequency 6 GHz
- Good VSWR of 1.35:1
- Gold Plated Brass Contact
- 30 µin minimum contact plating

Applications

- General Purpose Test
- Custom Cable Assemblies

Description

Pasternack's PE4552 MCX plug connector with crimp/solder attachment for RG178 and RG196 is part of our full line of RF components available for same-day shipping. Our MCX plug connector operates up to a maximum frequency of 6 GHz and offers good VSWR of 1.35:1.

Our MCX plug connector PE4552 datasheet specifications and drawing with dimensions are shown below in this PDF. Pasternack's broad catalog of RF, microwave and millimeter wave connectors allows designers to configure and customize their signal connections however they like. Whether the need is to provide an I/O for a board design, or simply create a custom cable assembly configuration, Pasternack has the right connector for the job. Pasternack can also expertly build your custom cable assemblies for you and ship same-day.

Electrical Specifications

Description	Minimum	Typical	Maximum	Units
Frequency Range	DC		6	GHz
VSWR			1.35:1	
Insertion Loss			0.4	dB
Operating Voltage (AC)			335	Vrms
Dielectric Withstanding Voltage (AC)			500	Vrms
Inner Conductor DC Resistance			5	mOhms
Outer Conductor DC Resistance			1	mOhms
Insulation Resistance	1,000			MOhms
RF Leakage	60			dB

Click the following link (or enter part number in "SEARCH" on website) to obtain additional part information including price, inventory and certifications: MCX Plug Connector Crimp/Solder Attachment for RG178, RG196 PE4552

Pasternack Enterprises, Inc. • P.O. Box 16759, Irvine, CA 92623
Phone: (866) 727-8376 or (949) 261-1920 • **Fax:** (949) 261-7451
Sales@Pasternack.com • Techsupport@Pasternack.com

© 2016 Pasternack Enterprises All Rights Reserved

MCX Plug Connector Crimp/Solder Attachment for RG178, RG196

Performance by Frequency

Description	F1	F2	F3	F4	F5	Units
Frequency Range	DC to 2	2 to 6				GHz
VSWR, Max	1.22:1	1.35:1				

Mechanical Specifications

Size

Length	0.619 in [15.72 mm]
Width/Dia.	0.195 in [4.95 mm]
Weight	0.005 lbs [2.27 g]
Mating Cycles	500 Cycles

Material Specifications

Description	Material	Plating
Contact	Brass	Gold 30 µin minimum
Insulation	PTFE	
Body	Brass	Nickel 2.5 µin minimum

Environmental Specifications

Temperature

Operating Range	-65 to +165 deg C
Vibration	MIL-STD-202, Method 204, Condition B
Temperature Cycle	MIL-STD-202, Method 107, Condition B
Salt Spray	MIL-STD-202, Method 101, Condition B

Click the following link (or enter part number in "SEARCH" on website) to obtain additional part information including price, inventory and certifications: MCX Plug Connector Crimp/Solder Attachment for RG178, RG196 PE4552

Pasternack Enterprises, Inc. • P.O. Box 16759, Irvine, CA 92623
Phone: (866) 727-8376 or (949) 261-1920 • **Fax:** (949) 261-7451
Sales@Pasternack.com • Techsupport@Pasternack.com

© 2016 Pasternack Enterprises All Rights Reserved

MCX Plug Connector Crimp/Solder Attachment for RG178, RG196

Compliance Certifications (see product page for current document)

Plotted and Other Data

Notes:

MCX Plug Connector Crimp/Solder Attachment for RG178, RG196 from Pasternack Enterprises has same day shipment for domestic and International orders. Our RF, microwave and millimeter wave products maintain a 99% availability and are part of the broadest selection in the industry.

Click the following link (or enter part number in "SEARCH" on website) to obtain additional part information including price, inventory and certifications: MCX Plug Connector Crimp/Solder Attachment for RG178, RG196 PE4552

URL: https://www.pasternack.com/mcx-plug-standard-rg178-rg196-connector-pe4552-p.aspx

The information contained in this document is accurate to the best of our knowledge and representative of the part described herein. It may be necessary to make modifications to the part and/or the documentation of the part, in order to implement improvements. Pasternack reserves the right to make such changes as required. Unless otherwise stated, all specifications are nominal. Pasternack does not make any representation or warranty regarding the suitability of the part described herein for any particular purpose, and Pasternack does not assume any liability arising out of the use of any part or documentation.

Pasternack Enterprises, Inc. • P.O. Box 16759, Irvine, CA 92623
Phone: (866) 727-8376 or (949) 261-1920 • **Fax:** (949) 261-7451
Sales@Pasternack.com • Techsupport@Pasternack.com

© 2016 Pasternack Enterprises All Rights Reserved

PE4552 CAD Drawing

MCX Plug Connector Crimp/Solder Attachment for RG178, RG196

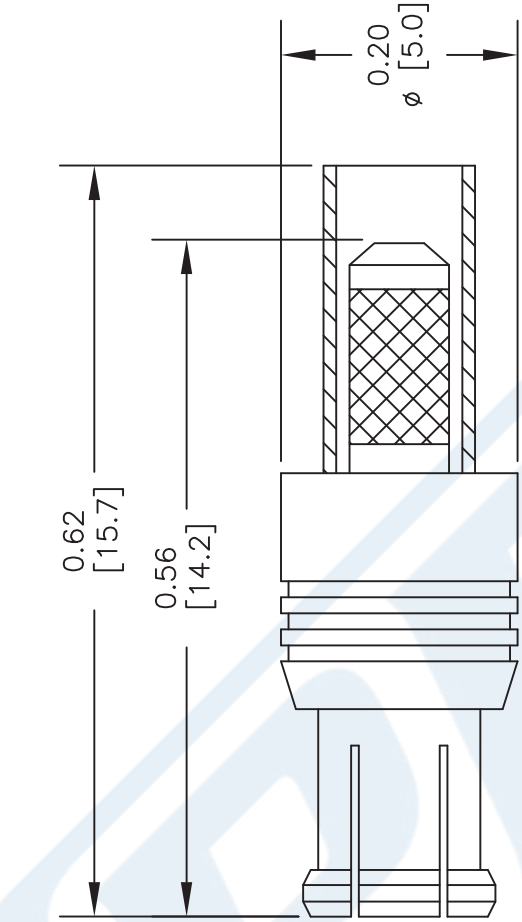

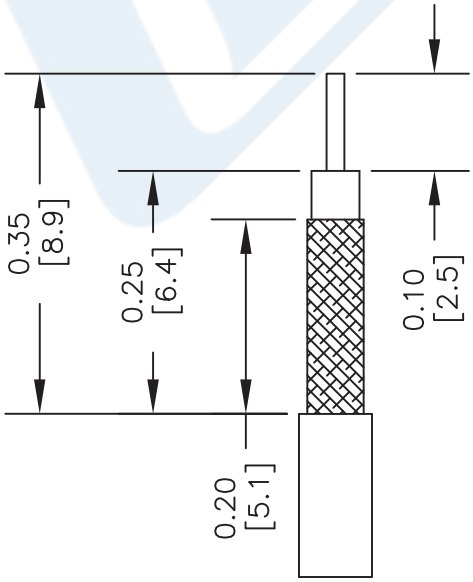

STRIPPING DIMENSIONS

CRIMP SIZE REQUIRED

CONTACT: SOLDER
FERRULE: .100" HEX CRIMP TOOL

STANDARD TOLERANCES	
.X	±0.008
.XX	±0.004
.XXX	±0.002

*STANDARD TOLERANCES APPLY ONLY TO DIMENSIONS IN INCHES

NOTES:
1. UNLESS OTHERWISE SPECIFIED ALL DIMENSIONS ARE NOMINAL.
2. ALL SPECIFICATIONS ARE SUBJECT TO CHANGE WITHOUT NOTICE AT ANY TIME.
3. DIMENSIONS ARE IN INCHES [mm].

DWG TITLE
PE4552

FSCM NO. 53919

CAD FILE 040516 | SCALE N/A | SIZE A | 3045

PASTERNACK®
THE ENGINEER'S RF SOURCE
Pasternack Enterprises, Inc.
P.O. Box 16759 | Irvine | CA | 92623
Phone: (949) 261-1920 | **Fax:** (949) 261-7451
Website: www.pasternack.com | **E-Mail:** sales@pasternack.com

© 2016 Pasternack Enterprises All Rights Reserved

PASTERNACK®
THE ENGINEER'S RF SOURCE

MMCX Plug Connector Crimp/Solder Attachment for RG178, RG196

RF Connectors Technical Data Sheet PE4897

Configuration

- MMCX Plug Connector
- BS EN 122340
- 50 Ohms
- Straight Body Geometry
- RG178, RG196 Interface Type
- Crimp/Solder Attachment

Features

- Max. Operating Frequency 3 GHz
- Excellent VSWR of 1.22:1
- Gold Plated Brass Contact
- 30 µin minimum contact plating

Applications

- General Purpose Test
- Custom Cable Assemblies

Description

Pasternack's PE4897 MMCX plug connector with crimp/solder attachment for RG178 and RG196 is part of our full line of RF components available for same-day shipping. Our MMCX plug connector operates up to a maximum frequency of 3 GHz and offers excellent VSWR of 1.22:1.

Our MMCX plug connector PE4897 datasheet specifications and drawing with dimensions are shown below in this PDF. Pasternack's broad catalog of RF, microwave and millimeter wave connectors allows designers to configure and customize their signal connections however they like. Whether the need is to provide an I/O for a board design, or simply create a custom cable assembly configuration, Pasternack has the right connector for the job. Pasternack can also expertly build your custom cable assemblies for you and ship same-day.

Electrical Specifications

Description	Minimum	Typical	Maximum	Units
Frequency Range	DC		3	GHz
VSWR			1.22:1	
Operating Voltage (AC)			170	Vrms
Dielectric Withstanding Voltage (AC)			500	Vrms

Mechanical Specifications

Size	
Length	0.453 in [11.51 mm]
Width/Dia.	0.138 in [3.51 mm]
Weight	0.003 lbs [1.36 g]

Click the following link (or enter part number in "SEARCH" on website) to obtain additional part information including price, inventory and certifications: MMCX Plug Connector Crimp/Solder Attachment for RG178, RG196 PE4897

Pasternack Enterprises, Inc. • P.O. Box 16759, Irvine, CA 92623
Phone: (866) 727-8376 or (949) 261-1920 • **Fax:** (949) 261-7451
Sales@Pasternack.com • Techsupport@Pasternack.com

© 2016 Pasternack Enterprises All Rights Reserved

MMCX Plug Connector Crimp/Solder Attachment for RG178, RG196

Material Specifications

Description	Material	Plating
Contact	Brass	Gold 30 µin minimum
Insulation	PTFE	
Body	Brass	Gold 3 µin minimum

Environmental Specifications

Temperature

Operating Range -55 to +155 deg C

Compliance Certifications (see product page for current document)

Plotted and Other Data

Notes:

MMCX Plug Connector Crimp/Solder Attachment for RG178, RG196 from Pasternack Enterprises has same day shipment for domestic and International orders. Our RF, microwave and millimeter wave products maintain a 99% availability and are part of the broadest selection in the industry.

Click the following link (or enter part number in "SEARCH" on website) to obtain additional part information including price, inventory and certifications: MMCX Plug Connector Crimp/Solder Attachment for RG178, RG196 PE4897

URL: https://www.pasternack.com/mmcx-plug-standard-rg178-rg196-connector-pe4897-p.aspx

The information contained in this document is accurate to the best of our knowledge and representative of the part described herein. It may be necessary to make modifications to the part and/or the documentation of the part, in order to implement improvements. Pasternack reserves the right to make such changes as required. Unless otherwise stated, all specifications are nominal. Pasternack does not make any representation or warranty regarding the suitability of the part described herein for any particular purpose, and Pasternack does not assume any liability arising out of the use of any part or documentation.

Pasternack Enterprises, Inc. • P.O. Box 16759, Irvine, CA 92623
Phone: (866) 727-8376 or (949) 261-1920 • **Fax:** (949) 261-7451
Sales@Pasternack.com • Techsupport@Pasternack.com

© 2016 Pasternack Enterprises All Rights Reserved

PE4897 CAD Drawing

MMCX Plug Connector Crimp/Solder Attachment for RG178, RG196

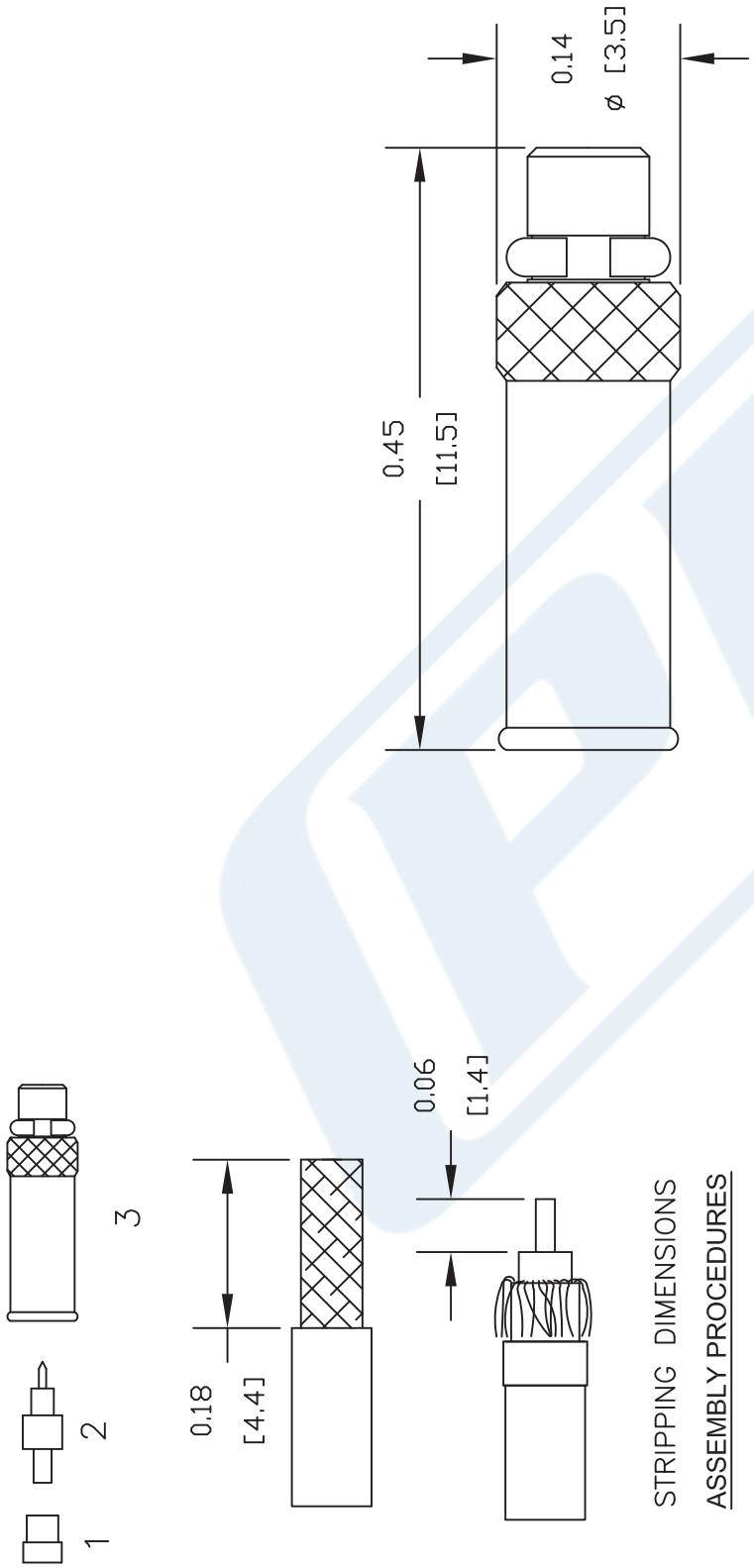

STRIPPING DIMENSIONS

ASSEMBLY PROCEDURES

1. STRIP CABLE AS SHOWN. DO NOT NICK BRAID WHILE CUTTING JACKET.

2. SLIDE INSERT (1) OVER BRAID AND AGAINST THE JACKET, FORM BRAID OVER INSERT (1). TRIM BRAID BACK TO SHOULDER. STRIP DIELECTRIC AND CENTER CONDUCTOR TO DIMENSION SHOWN. TIN CENTER CONDUCTOR.

3. SOLDER CONTACT (2), TO CENTER CONDUCTOR REMOVE EXCESS SOLDER. SLIDE BODY OVER CONTACT AND INSERT (1). THEN CRIMP BODY (3).

CRIMP SIZE REQUIRED

FERRULE: .100" HEX CRIMP TOOL

NOTES:
1. UNLESS OTHERWISE SPECIFIED ALL DIMENSIONS ARE NOMINAL.
2. ALL SPECIFICATIONS ARE SUBJECT TO CHANGE WITHOUT NOTICE AT ANY TIME.
3. DIMENSIONS ARE IN INCHES [mm].
4. FITS MIL-C-17 AND EQUIVALENT CABLES.

DWG TITLE PE4897

REV. C	FSCM NO. 53919	CAD FILE 100509	SCALE N/A	SIZE A	127

PASTERNACK® THE ENGINEER'S RF SOURCE
Pasternack Enterprises, Inc.
P.O. Box 16759 | Irvine | CA | 92623
Phone: (949) 261-1920 | **Fax:** (949) 261-7451
Website: www.pasternack.com | **E-Mail:** sales@pasternack.com

© 2016 Pasternack Enterprises All Rights Reserved

Flexible RG178 Coax Cable Single Shielded with Tan FEP Jacket

Configuration

- Flexible Cable
- 1 Shield(s)

Electrical Specifications

Description	Minimum	Typical	Maximum	Units
Frequency Range	DC		3	GHz
Impedance		50		Ohms
Velocity of Propagation		70		%
Operating Voltage (AC)			1,000	Vrms
Nominal Capacitance		29.4 [96.46]		pF/ft [pF/m]

Performance by Frequency Band

Description	F1	F2	F3	F4	F5	Units
Frequency	0.1	0.4	1	3		GHz
Attenuation, Typ	13.81	27.8	44.41	78.4		dB/100ft
	45.31	91.21	145.7	257.22		dB/100m

Mechanical Specifications

Diameter	0.072 in [1.83 mm]
Weight	0.005 lbs/ft [0.01 Kg/m]
Min. Bend Radius (Repeated)	0.4 in [10.16 mm]

Construction Specifications

Description	Material and Plating	Diameter
Inner Conductor	Copper Clad Steel, Silver, 7 Strands	0.012 in [0.3 mm]
Conductor Type	Stranded	
Dielectric	PTFE	0.034 in [0.86 mm]
First Shield	Silver Plated Copper Braid	0.051 in [1.3 mm]

Click the following link (or enter part number in “SEARCH” on website) to obtain additional part information including price, inventory and certifications: Flexible RG178 Coax Cable Single Shielded with Tan FEP Jacket RG178B/U

Pasternack Enterprises, Inc. • P.O. Box 16759, Irvine, CA 92623
Phone: (866) 727-8376 or (949) 261-1920 • **Fax:** (949) 261-7451
Sales@Pasternack.com • Techsupport@Pasternack.com

© 2017 Pasternack Enterprises All Rights Reserved

Flexible RG178 Coax Cable Single Shielded with Tan FEP Jacket

Jacket	FEP, Tan	0.072 in [1.83 mm]

Environmental Specifications

Temperature

Operating Range	-55 to +200 deg C

Compliance Certifications (see product page for current document)

Plotted and Other Data

Notes:

Flexible RG178 Coax Cable Single Shielded with Tan FEP Jacket from Pasternack Enterprises has same day shipment for domestic and International orders. Our RF, microwave and millimeter wave products maintain a 99.4% availability and are part of the broadest selection in the industry.

Click the following link (or enter part number in "SEARCH" on website) to obtain additional part information including price, inventory and certifications: Flexible RG178 Coax Cable Single Shielded with Tan FEP Jacket RG178B/U

URL: https://www.pasternack.com/flexible-0.075-rg178-50-ohm-coax-cable-fep-jacket-rg178b-u-p.aspx

The information contained in this document is accurate to the best of our knowledge and representative of the part described herein. It may be necessary to make modifications to the part and/or the documentation of the part, in order to implement improvements. Pasternack reserves the right to make such changes as required. Unless otherwise stated, all specifications are nominal. Pasternack does not make any representation or warranty regarding the suitability of the part described herein for any particular purpose, and Pasternack does not assume any liability arising out of the use of any part or documentation.

Pasternack Enterprises, Inc. • P.O. Box 16759, Irvine, CA 92623
Phone: (866) 727-8376 or (949) 261-1920 • **Fax:** (949) 261-7451
Sales@Pasternack.com • Techsupport@Pasternack.com

© 2017 Pasternack Enterprises All Rights Reserved

RG178B/U CAD Drawing

Flexible RG178 Coax Cable Single Shielded with Tan FEP Jacket

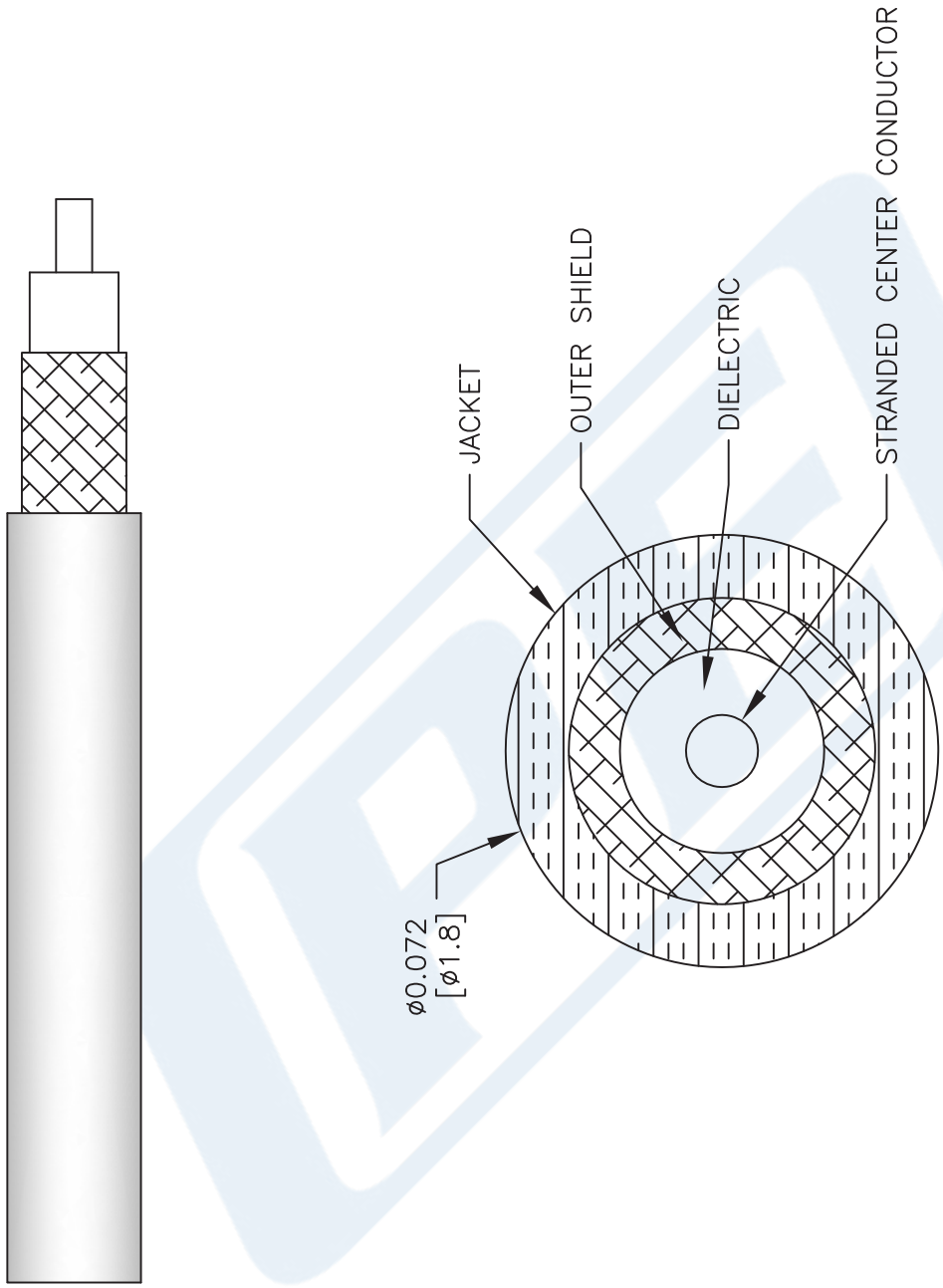

NOTES:
1. UNLESS OTHERWISE SPECIFIED ALL DIMENSIONS ARE NOMINAL.
2. ALL SPECIFICATIONS ARE SUBJECT TO CHANGE WITHOUT NOTICE AT ANY TIME.
3. DIMENSIONS ARE IN INCHES [mm].

DWG TITLE
RG178B/U

CAD FILE 062117 | SCALE N/A | SIZE A | 2233

CAGE CODE 53919

PASTERNACK®
THE ENGINEER'S RF SOURCE
Pasternack Enterprises, Inc.
P.O. Box 16759 | Irvine | CA | 92623
Phone: (949) 261-1920 | **Fax:** (949) 261-7451
Website: www.pasternack.com | **E-Mail:** sales@pasternack.com

© 2017 Pasternack Enterprises All Rights Reserved