| MATERIALS | |
|---|---|
| BODY | BRASS NICKEL PLATED |
| CONTACT | GOLD PLATED |
| INSULATOR | PTFE |
| | |

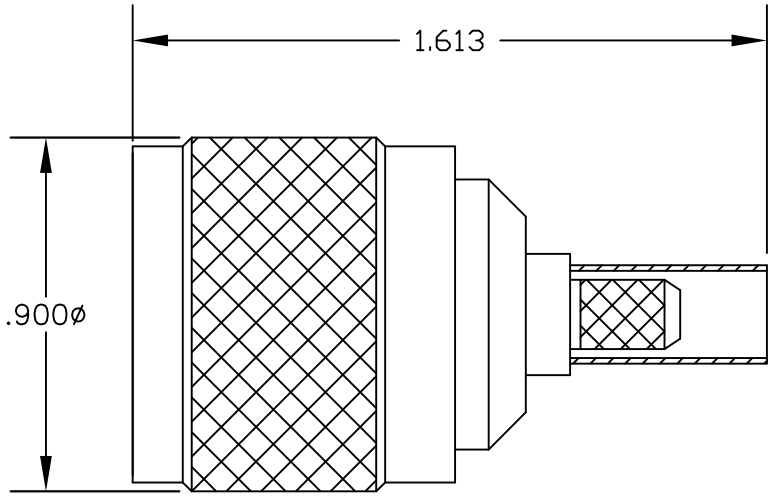


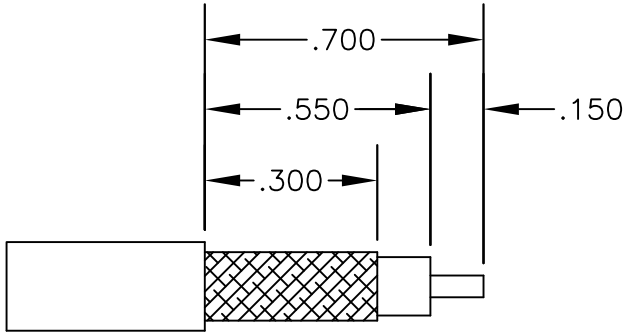


STRIPPING DIMENSIONS

CRIMP SIZES REQUIRED

CONTACT: .100" HEX CRIMP TOOL

FERRULE: .213" HEX CRIMP TOOL


PASTERNACK ENTERPRISES®
ESTABLISHED 1972

PASTERNACK ENTERPRISES, INC.
P.O BOX 16759, IRVINE, CA 92623
PHONE (949) 261-1920 FAX (949) 261-7451

WEB ADDRESS: www.pasternack.com
E-MAIL ADDRESS: sales@pasternack.com


COAXIAL & FIBER OPTICS

| DWG TITLE | DES. | | | |
|---|---|---|---|---|
| PE4478 | HN MALE, CRIMP ATTACHMENT FOR RG58 | | | |
| SIZE A | FSCM NO. 53919 | CAD FILE 051602 | SCALE N/A | 127 |

NOTES:
1. UNLESS OTHERWISE SPECIFIED ALL DIMENSIONS ARE NOMINAL.
2. ALL SPECIFICATIONS ARE SUBJECT TO CHANGE WITHOUT NOTICE AT ANY TIME.

PASTERNACK®
THE ENGINEER'S RF SOURCE

# SHV Jack Bulkhead Connector Clamp/Solder Attachment For RG58, RG55, RG141, RG142, RG223, RG400, .480 inch D Hole



## Configuration

- SHV Jack Connector
- MIL-STD-348
- 50 Ohms
- Straight Body Geometry
- RG58, RG142, RG223, RG400, RG141, RG303, RG55, LMR-400, PE-C195, PE-P195 Interface Type
- Clamp/Solder Attachment
- Bulkhead

## Features

- Silver Plated Brass Contact
- Contact plating according to ASTM-B700

## Applications

- General Purpose Test
- Rack and Panel Mount Applications
- Custom Cable Assemblies

### Description

Pasternack's PE44080 SHV jack bulkhead connector with clamp/solder attachment for RG58, RG142, RG223, RG400, RG141, RG303, RG55, LMR-400, PE-C195 and PE-P195 (.480 inch D hole) is part of our full line of RF components available for same-day shipping. This SHV bulkhead connector allows designers to create external connections on their product enclosures, and can be used in a variety of other rack mount and panel mount applications.

Our SHV jack bulkhead connector PE44080 datasheet specifications and drawing with dimensions are shown below in this PDF. Pasternack's broad catalog of RF, microwave and millimeter wave connectors allows designers to configure and customize their signal connections however they like. Whether the need is to provide an I/O for a board design, or simply create a custom cable assembly configuration, Pasternack has the right connector for the job. Pasternack can also expertly build your custom cable assemblies for you and ship same-day.

### Electrical Specifications

| Description | Minimum | Typical | Maximum | Units |
|---|---|---|---|---|
| Operating Voltage (AC) | | | 3,500 | Vrms |
| Dielectric Withstanding Voltage (AC) | | | 5,000 | Vrms |

### Mechanical Specifications

| | |
|---|---|
| **Size** | |
| Length | 1.83 in [46.48 mm] |
| Width/Dia. | 0.687 in [17.45 mm] |
| Weight | 0.069 lbs [31.3 g] |

Click the following link (or enter part number in "SEARCH" on website) to obtain additional part information including price, inventory and certifications: SHV Jack Bulkhead Connector Clamp/Solder Attachment For RG58, RG55, RG141, RG142, RG223, RG400, .480 inch D Hole PE44080

Pasternack Enterprises, Inc. • P.O. Box 16759, Irvine, CA 92623
**Phone:** (866) 727-8376 or (949) 261-1920 • **Fax:** (949) 261-7451
Sales@Pasternack.com • Techsupport@Pasternack.com

© 2017 Pasternack Enterprises All Rights Reserved

# SHV Jack Bulkhead Connector Clamp/Solder Attachment For RG58, RG55, RG141, RG142, RG223, RG400, .480 inch D Hole



**Material Specifications**

| Description | Material | Plating |
|---|---|---|
| Contact | Brass | Silver<br>ASTM-B700 |
| Insulation | PTFE | |
| Body | Brass | Nickel<br>ASTM-B689 |

## Environmental Specifications

**Temperature**

Operating Range -65 to +165 deg C

## Compliance Certifications (see product page for current document)

## Plotted and Other Data

Notes:

**Assembly Instruction**

SHV Jack Bulkhead Connector Clamp/Solder Attachment For RG58, RG55, RG141, RG142, RG223, RG400, .480 inch D Hole from Pasternack Enterprises has same day shipment for domestic and International orders. Our RF, microwave and millimeter wave products maintain a 99.4% availability and are part of the broadest selection in the industry.

Click the following link (or enter part number in "SEARCH" on website) to obtain additional part information including price, inventory and certifications: SHV Jack Bulkhead Connector Clamp/Solder Attachment For RG58, RG55, RG141, RG142, RG223, RG400, .480 inch D Hole PE44080

URL: https://www.pasternack.com/shv-jack-standard-rg58-rg55-rg141-rg142-rg223-rg400-connector-pe44080-p.aspx

The information contained in this document is accurate to the best of our knowledge and representative of the part described herein. It may be necessary to make modifications to the part and/or the documentation of the part, in order to implement improvements. Pasternack reserves the right to make such changes as required. Unless otherwise stated, all specifications are nominal. Pasternack does not make any representation or warranty regarding the suitability of the part described herein for any particular purpose, and Pasternack does not assume any liability arising out of the use of any part or documentation.

Pasternack Enterprises, Inc. • P.O. Box 16759, Irvine, CA 92623
**Phone:** (866) 727-8376 or (949) 261-1920 • **Fax:** (949) 261-7451
Sales@Pasternack.com • Techsupport@Pasternack.com

© 2017 Pasternack Enterprises All Rights Reserved

# PE44080 CAD Drawing

SHV Jack Bulkhead Connector Clamp/Solder Attachment For RG58, RG55, RG141, RG142, RG223, RG400, .480 inch D Hole

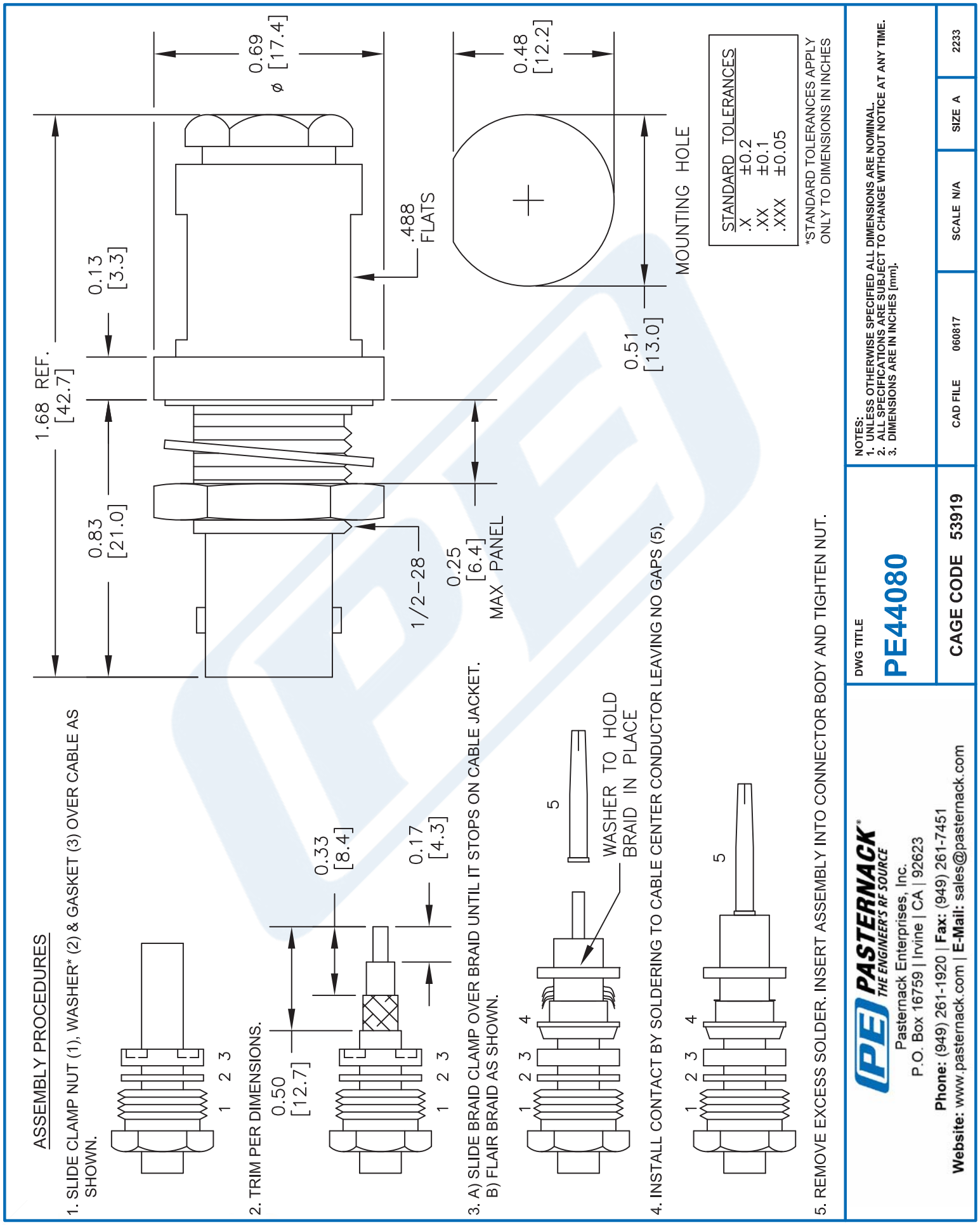


© 2017 Pasternack Enterprises All Rights Reserved

# Flexible RG58 Coax Cable Single Shielded with Black PVC (NC) Jacket



## Configuration

- Flexible Cable
- 1 Shield(s)

### Electrical Specifications

| Description | Minimum | Typical | Maximum | Units |
|---|---|---|---|---|
| Frequency Range | DC | | 5 | GHz |
| Impedance | | 50 | | Ohms |
| Velocity of Propagation | | 65.9 | | % |
| Operating Voltage (AC) | | | 1,900 | Vrms |
| Nominal Capacitance | | 30.8 [101.05] | | pF/ft [pF/m] |

#### Performance by Frequency Band

| Description | F1 | F2 | F3 | F4 | F5 | Units |
|---|---|---|---|---|---|---|
| Frequency | 0.01 | 0.1 | 1 | 5 | | GHz |
| Attenuation, Typ | 1.4 | 4.9 | 20 | 60 | | dB/100ft |
| | 4.59 | 16.08 | 65.62 | 196.85 | | dB/100m |
| Input Power (CW), Max | | | 44 | | | Watts |

### Mechanical Specifications

| | |
|---|---|
| Diameter | 0.195 in [4.95 mm] |
| Weight | 0.025 lbs/ft [0.04 Kg/m] |
| Min. Bend Radius (Installation) | 0.98 in [24.89 mm] |
| Min. Bend Radius (Repeated) | 1.96 in [49.78 mm] |

#### Construction Specifications

| Description | Material and Plating | Diameter |
|---|---|---|
| Inner Conductor | Copper, Tin, 19 Strands | 0.036 in [0.91 mm] |
| Conductor Type | Stranded | |
| Dielectric | PE | 0.116 in [2.95 mm] |

Click the following link (or enter part number in “SEARCH” on website) to obtain additional part information including price, inventory and certifications: Flexible RG58 Coax Cable Single Shielded with Black PVC (NC) Jacket RG58C/U

Pasternack Enterprises, Inc. • P.O. Box 16759, Irvine, CA 92623
**Phone:** (866) 727-8376 or (949) 261-1920 • **Fax:** (949) 261-7451
Sales@Pasternack.com • Techsupport@Pasternack.com

© 2017 Pasternack Enterprises All Rights Reserved

# Flexible RG58 Coax Cable Single Shielded with Black PVC (NC) Jacket



| | | |
|---|---|---|
| First Shield | Tinned Copper Braid | 0.138 in [3.51 mm] |
| Jacket | PVC (NC), Black | 0.195 in [4.95 mm] |

## Environmental Specifications

**Temperature**

| | |
|---|---|
| Operating Range | -40 to +80 deg C |

## Compliance Certifications (see product page for current document)

## Plotted and Other Data

Notes:

Flexible RG58 Coax Cable Single Shielded with Black PVC (NC) Jacket from Pasternack Enterprises has same day shipment for domestic and International orders. Our RF, microwave and millimeter wave products maintain a 99.4% availability and are part of the broadest selection in the industry.

Click the following link (or enter part number in "SEARCH" on website) to obtain additional part information including price, inventory and certifications: Flexible RG58 Coax Cable Single Shielded with Black PVC (NC) Jacket RG58C/U

URL: https://www.pasternack.com/flexible-0.195-rg58-50-ohm-coax-cable-pvc-jacket-rg58c-u-p.aspx

The information contained in this document is accurate to the best of our knowledge and representative of the part described herein. It may be necessary to make modifications to the part and/or the documentation of the part, in order to implement improvements. Pasternack reserves the right to make such changes as required. Unless otherwise stated, all specifications are nominal. Pasternack does not make any representation or warranty regarding the suitability of the part described herein for any particular purpose, and Pasternack does not assume any liability arising out of the use of any part or documentation.

Pasternack Enterprises, Inc. • P.O. Box 16759, Irvine, CA 92623
**Phone:** (866) 727-8376 or (949) 261-1920 • **Fax:** (949) 261-7451
Sales@Pasternack.com • Techsupport@Pasternack.com

© 2017 Pasternack Enterprises All Rights Reserved

# RG58C/U CAD Drawing

Flexible RG58 Coax Cable Single Shielded with Black PVC (NC) Jacket

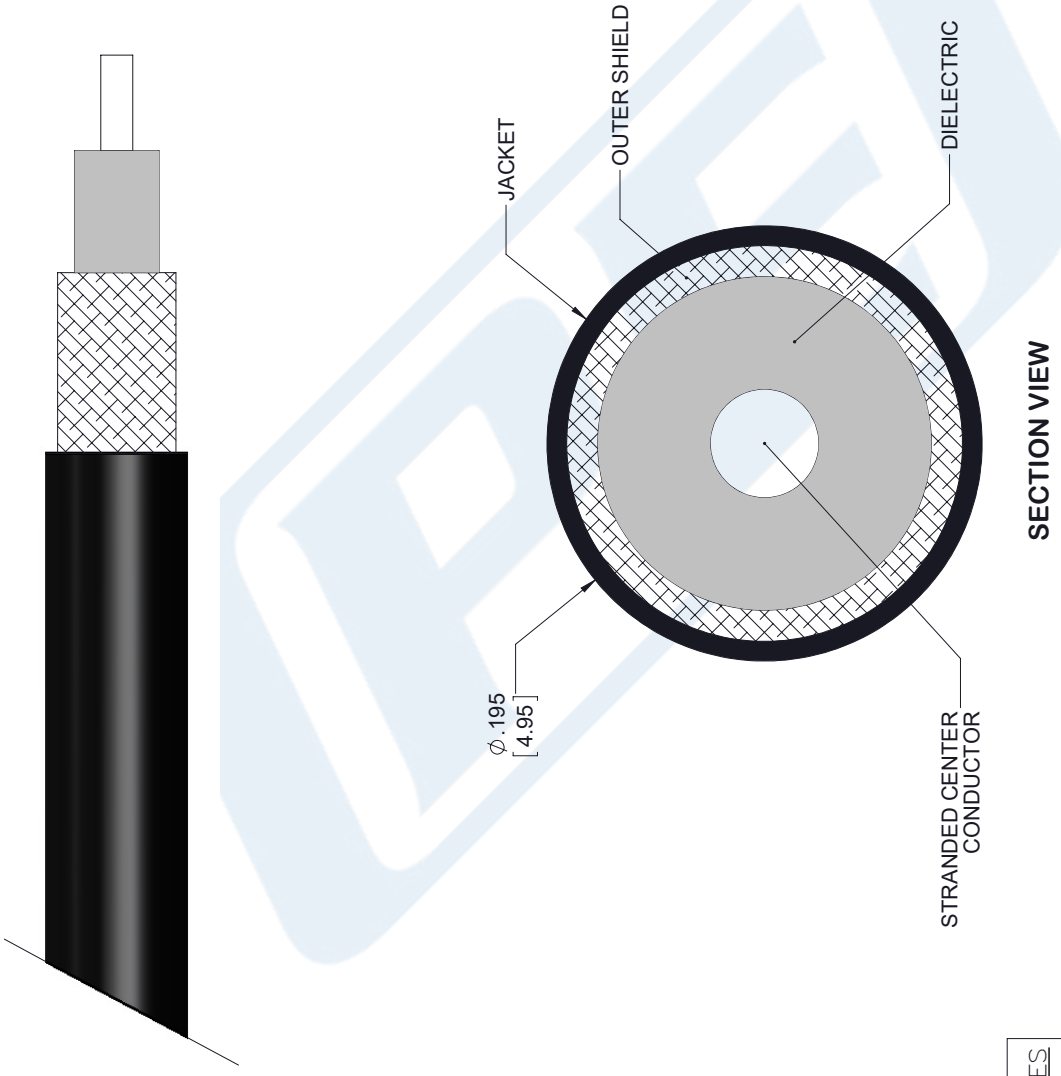


| STANDARD TOLERANCES | |
|---|---|
| .X | ±0.2 |
| .XX | ±0.01 |
| .XXX | ±0.005 |

*STANDARD TOLERANCES APPLY ONLY TO DIMENSIONS IN INCHES

NOTES:
1. UNLESS OTHERWISE SPECIFIED ALL DIMENSIONS ARE NOMINAL.
2. ALL SPECIFICATIONS ARE SUBJECT TO CHANGE WITHOUT NOTICE AT ANY TIME
3. DIMENSIONS ARE IN INCHES [mm].

DWG TITLE RG58C/U

CAD FILE 091817 | SCALE N/A | SIZE A | 7361

CAGE CODE 53919

PASTERNACK®
THE ENGINEER'S RF SOURCE
Pasternack Enterprises, Inc.
P.O. Box 16759 | Irvine | CA | 92623
**Phone:** (949) 261-1920 | **Fax:** (949) 261-7451
**Website:** www.pasternack.com | **E-Mail:** sales@pasternack.com

© 2017 Pasternack Enterprises All Rights Reserved