BNC Male Right Angle Connector Crimp/Solder Attachment for PE-C240, RG8X, 0.240 inch, LMR-240, LMR-240-DB, LMR-240-UF, B7808A

RF Connectors Technical Data Sheet PE44641

Configuration

- BNC Male Connector
- 50 Ohms
- Right Angle Body Geometry
- PE-C240, RG8X, 0.240 inch, LMR-240, LMR-240-DB, LMR-240-UF, B7808A Interface Type
- Crimp/Solder Attachment

Features

- Max. Operating Frequency 4 GHz
- Gold Plated Brass Contact

Applications

- General Purpose Test
- Custom Cable Assemblies

Description

Pasternack's PE44641 BNC male right angle connector with crimp/solder attachment for PE-C240, RG8X, 0.240 inch, LMR-240, LMR-240-DB, LMR-240-UF and B7808A is part of our full line of RF components available for same-day shipping. Our BNC male connector operates up to a maximum frequency of 4 GHz. Its right angle body geometry allows for easier connections in tight spaces.

Our BNC male right angle connector PE44641 datasheet specifications and drawing with dimensions are shown below in this PDF. Pasternack's broad catalog of RF, microwave and millimeter wave connectors allows designers to configure and customize their signal connections however they like. Whether the need is to provide an I/O for a board design, or simply create a custom cable assembly configuration, Pasternack has the right connector for the job. Pasternack can also expertly build your custom cable assemblies for you and ship same-day.

Electrical Specifications

Description	Minimum	Typical	Maximum	Units
Frequency Range	DC		4	GHz

Mechanical Specifications

Size

Length	1.103 in [28.02 mm]
Width/Dia.	0.571 in [14.50 mm]
Height	1.052 in [26.72 mm]
Weight	0.047 lbs [21.32 g]

Click the following link (or enter part number in "SEARCH" on website) to obtain additional part information including price, inventory and certifications: BNC Male Right Angle Connector Crimp/Solder Attachment for PE-C240, RG8X, 0.240 inch, LMR-240, LMR-240-DB, LMR-240-UF, B7808A PE44641

Pasternack Enterprises, Inc. • P.O. Box 16759, Irvine, CA 92623
Phone: (866) 727-8376 or (949) 261-1920 • **Fax:** (949) 261-7451
Sales@Pasternack.com • Techsupport@Pasternack.com

© 2016 Pasternack Enterprises All Rights Reserved

BNC Male Right Angle Connector Crimp/Solder Attachment for PE-C240, RG8X, 0.240 inch, LMR-240, LMR-240-DB, LMR-240-UF, B7808A

Material Specifications

Description	Material	Plating
Contact	Brass	Gold
Insulation	PTFE	
Body	Brass	Nickel
Coupling Nut	Brass	Nickel

Environmental Specifications

Temperature

Operating Range -40 to +85 deg C

Compliance Certifications (see product page for current document)

Plotted and Other Data

Notes:

BNC Male Right Angle Connector Crimp/Solder Attachment for PE-C240, RG8X, 0.240 inch, LMR-240, LMR-240-DB, LMR-240-UF, B7808A from Pasternack Enterprises has same day shipment for domestic and International orders. Our RF, microwave and millimeter wave products maintain a 99% availability and are part of the broadest selection in the industry.

Click the following link (or enter part number in "SEARCH" on website) to obtain additional part information including price, inventory and certifications: BNC Male Right Angle Connector Crimp/Solder Attachment for PE-C240, RG8X, 0.240 inch, LMR-240, LMR-240-DB, LMR-240-UF, B7808A PE44641

URL: https://www.pasternack.com/bnc-male-standard-rg8x-pe-c240-0.240-connector-pe44641-p.aspx

The information contained in this document is accurate to the best of our knowledge and representative of the part described herein. It may be necessary to make modifications to the part and/or the documentation of the part, in order to implement improvements. Pasternack reserves the right to make such changes as required. Unless otherwise stated, all specifications are nominal. Pasternack does not make any representation or warranty regarding the suitability of the part described herein for any particular purpose, and Pasternack does not assume any liability arising out of the use of any part or documentation.

Pasternack Enterprises, Inc. • P.O. Box 16759, Irvine, CA 92623
Phone: (866) 727-8376 or (949) 261-1920 • **Fax:** (949) 261-7451
Sales@Pasternack.com • Techsupport@Pasternack.com

© 2016 Pasternack Enterprises All Rights Reserved

PE44641 CAD Drawing

BNC Male Right Angle Connector Crimp/Solder Attachment for PE-C240, RG8X, 0.240 inch, LMR-240, LMR-240-DB, LMR-240-UF, B7808A

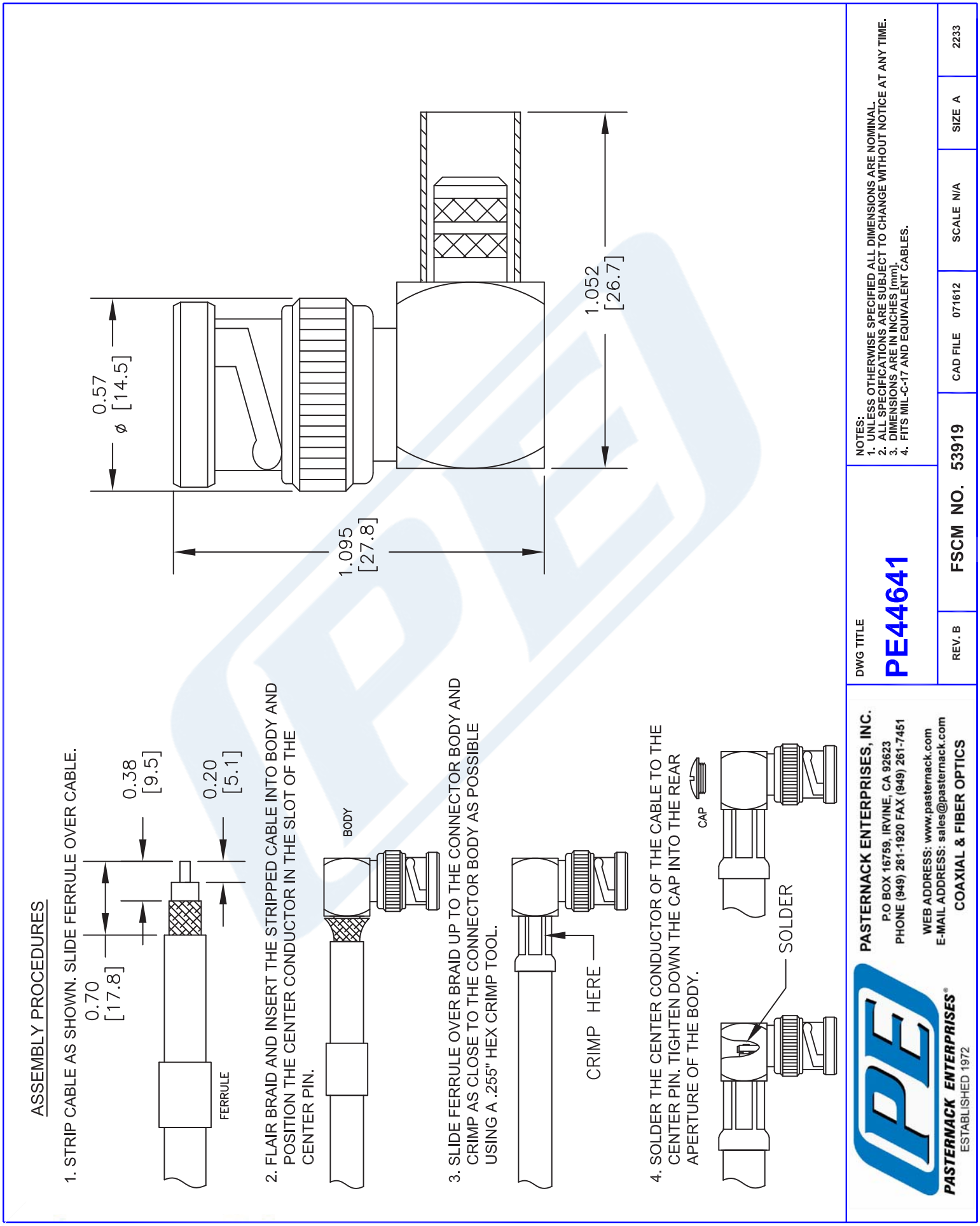

© 2016 Pasternack Enterprises All Rights Reserved

PASTERNACK®
THE ENGINEER'S RF SOURCE

SMA Male Connector Crimp/Solder Attachment for PE-C240, RG8X, 0.240 inch, LMR-240, LMR-240-DB, LMR-240-UF, B7808A

Configuration

- SMA Male Connector
- 50 Ohms
- Straight Body Geometry
- PE-C240, RG8X, 0.240 inch, LMR-240, LMR-240-DB, LMR-240-UF, B7808A Interface Type
- Crimp/Solder Attachment
- 5/16 inch Hex

Features

- Max. Operating Frequency 12.4 GHz
- Gold Plated Brass Contact

Applications

- General Purpose Test
- Custom Cable Assemblies

Description

Pasternack's PE44637 SMA male connector with crimp/solder attachment for PE-C240, RG8X, 0.240 inch, LMR-240, LMR-240-DB, LMR-240-UF and B7808A is part of our full line of RF components available for same-day shipping. Our SMA male connector operates up to a maximum frequency of 12.4 GHz.

Our SMA male connector PE44637 datasheet specifications and drawing with dimensions are shown below in this PDF. Pasternack's broad catalog of RF, microwave and millimeter wave connectors allows designers to configure and customize their signal connections however they like. Whether the need is to provide an I/O for a board design, or simply create a custom cable assembly configuration, Pasternack has the right connector for the job. Pasternack can also expertly build your custom cable assemblies for you and ship same-day.

Electrical Specifications

Description	Minimum	Typical	Maximum	Units
Frequency Range	DC		12.4	GHz
Operating Voltage (AC)			333	Vrms
Dielectric Withstanding Voltage (AC)			1,000	Vrms

Mechanical Specifications

Size	
Length	0.969 in [24.61 mm]
Width/Dia.	0.312 in [7.92 mm]
Weight	0.014 lbs [6.35 g]
Mating Cycles	500 Cycles
Mating Torque	3 to 5 in-lbs [0.34 to 0.57 Nm]

Click the following link (or enter part number in "SEARCH" on website) to obtain additional part information including price, inventory and certifications: SMA Male Connector Crimp/Solder Attachment for PE-C240, RG8X, 0.240 inch, LMR-240, LMR-240-DB, LMR-240-UF, B7808A PE44637

Pasternack Enterprises, Inc. • P.O. Box 16759, Irvine, CA 92623
Phone: (866) 727-8376 or (949) 261-1920 • **Fax:** (949) 261-7451
Sales@Pasternack.com • Techsupport@Pasternack.com

© 2016 Pasternack Enterprises All Rights Reserved

SMA Male Connector Crimp/Solder Attachment for PE-C240, RG8X, 0.240 inch, LMR-240, LMR-240-DB, LMR-240-UF, B7808A

Material Specifications

Description	Material	Plating
Contact	Brass	Gold
Insulation	PTFE	
Body	Brass	Gold
Coupling Nut	Brass	Gold

Environmental Specifications

Temperature

Operating Range -65 to +165 deg C

Compliance Certifications (see product page for current document)

Plotted and Other Data

Notes:

SMA Male Connector Crimp/Solder Attachment for PE-C240, RG8X, 0.240 inch, LMR-240, LMR-240-DB, LMR-240-UF, B7808A from Pasternack Enterprises has same day shipment for domestic and International orders. Our RF, microwave and millimeter wave products maintain a 99% availability and are part of the broadest selection in the industry.

Click the following link (or enter part number in "SEARCH" on website) to obtain additional part information including price, inventory and certifications: SMA Male Connector Crimp/Solder Attachment for PE-C240, RG8X, 0.240 inch, LMR-240, LMR-240-DB, LMR-240-UF, B7808A PE44637

URL: https://www.pasternack.com/sma-male-standard-rg8x-pe-c240-0.240-connector-pe44637-p.aspx

The information contained in this document is accurate to the best of our knowledge and representative of the part described herein. It may be necessary to make modifications to the part and/or the documentation of the part, in order to implement improvements. Pasternack reserves the right to make such changes as required. Unless otherwise stated, all specifications are nominal. Pasternack does not make any representation or warranty regarding the suitability of the part described herein for any particular purpose, and Pasternack does not assume any liability arising out of the use of any part or documentation.

Pasternack Enterprises, Inc. • P.O. Box 16759, Irvine, CA 92623
Phone: (866) 727-8376 or (949) 261-1920 • **Fax:** (949) 261-7451
Sales@Pasternack.com • Techsupport@Pasternack.com

© 2016 Pasternack Enterprises All Rights Reserved

PE44637 CAD Drawing

SMA Male Connector Crimp/Solder Attachment for PE-C240, RG8X, 0.240 inch, LMR-240, LMR-240-DB, LMR-240-UF, B7808A

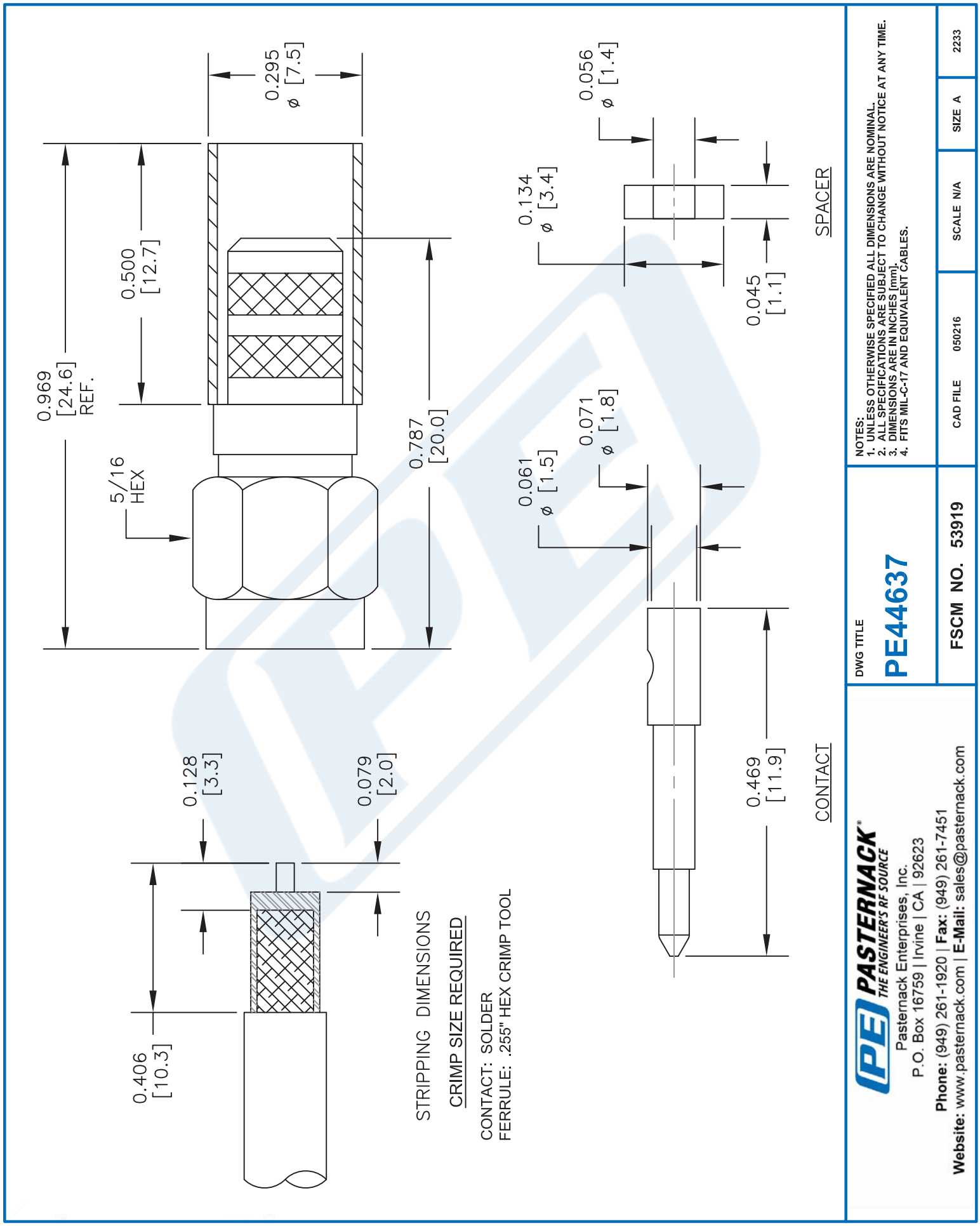

© 2016 Pasternack Enterprises All Rights Reserved

TIMES MICROWAVE SYSTEMS

LMR®-240
Flexible Low Loss Communications Coax

Ideal for...

- Jumper Assemblies in Wireless Communications Systems
- Short Antenna Feeder runs (e.g. WLL, GPS, LMR, Mobile Antennas)
- Any application (e.g. WLL, GPS, LMR, WLAN, WISP, WiMax, SCADA, Mobile Antennas) requiring an easily routed, low loss RF cable

• **LMR®** standard is a UV Resistant Polyethylene jacketed cable designed for 20-year service outdoor use. The bending and handling characteristics are significantly better than air-dielectric and corrugated hard-line cables.

• **LMR®- DB** is identical to standard LMR plus has the advantage of being watertight. The addition of waterproofing compound in and around the foil/braid insures continuous reliable service should the jacket be inadvertently damaged during installation or in the future.

• **LMR®- FR** is a non-halogen (non-toxic), low smoke, fire retardant cable designed for in-building runs that can be routed anywhere except air handling plenums. LMR-FR is UL/NEC & CSA rated 'CMR' and 'FT4' respectively, meets FAA FAR25 requirements and is MSHA-P for mining applications.

• **LMR®- FR-PVC** is a general-purpose indoor cable and has a UL/NEC & CSA rating of 'CMR' and 'FT4' respectively. It is less expensive than LMR-FR, however it emits toxic fumes (HCL) and greater smoke density when burned.

• **LMR®- PVC** is designed for low loss general-purpose applications and is somewhat more flexible than the standard polyethylene jacketed LMR.

• **LMR®- PVC-W** is a white-jacketed version of LMR-PVC for marine and other applications where color compatibility is desired.

• **LMR®- MA** is a flexible cable designed specifically for mobile antenna applications. It has a PVC jacket and un-bonded aluminum tape to facilitate end stripping with automated equipment.

• **Flexibility** and bendability are hallmarks of the LMR-240 cable design. The flexible outer conductor enables the tightest bend radius available for any cable of similar size and performance.

• **Low Loss** is another hallmark feature of LMR-240. Size for size LMR has the lowest loss of any flexible cable and comparable loss to semirigid hard-line cables.

• **RF Shielding** is 50 dB greater than typical single shielded coax (40 dB). The multi-ply bonded foil outer conductor is rated conservatively at > 90 dB (i.e. >180 dB between two adjacent cables).

• **Weatherability**: LMR-240 cables designed for outdoor exposure incorporate the best materials for UV resistance and have life expectancy in excess of 20 years.

• **Connectors**: A wide variety of connectors are available for LMR-240 cable, including all common interface types, reverse polarity, and a choice of solder or non-solder center pins. Most LMR connectors employ crimp outer attachment using standard hex crimp sizes.

• **Cable Assemblies**: All LMR-240 cable types are available as pre-terminated cable assemblies. Refer to the section on FlexTech for further details.

Part Description

Part Number	Application	Jacket	Color	Stock Code
LMR-240	Outdoor	PE	Black	54021
LMR-240-DB	Outdoor/Watertight	PE	Black	54090
LMR-240-FR	Indoor/Outdoor Riser CMR	FRPE	Black	54029
LMR-240-FR-PVC	Indoor/Outdoor Riser CMR	FRPVC	Black	54214
LMR-240-PVC	General Purpose	PVC	Black	54140
LMR-240-PVC-W	General Purpose	PVC	White	54202
LMR-240-MA	Indoor & Mobile Antenna	PVC	Black	54046

Construction Specifications

Description	Material	In.	(mm)
Inner Conductor	Solid BC	0.056	(1.42)
Dielectric	Foam PE	0.150	(3.81)
Outer Conductor	Aluminum Tape	0.155	(3.94)
Overall Braid	Tinned Copper	0.178	(4.52)
Jacket	(see table above)	0.240	(6.10)

Mechanical Specifications

Performance Property	Units	US	(metric)
Bend Radius: installation	in. (mm)	0.75	(19.1)
Bend Radius: repeated	in. (mm)	2.5	(63.5)
Bending Moment	ft-lb (N-m)	0.25	(0.34)
Weight	lb/ft (kg/m)	0.034	(0.05)
Tensile Strength	lb (kg)	80	(36.3)
Flat Plate Crush	lb/in. (kg/mm)	20	(0.36)

Environmental Specifications

Performance Property	°F	°C
Installation Temperature Range	-40/+185	-40/+85
Storage Temperature Range	-94/+185	-70/+85
Operating Temperature Range	-40/+185	-40/+85

Electrical Specifications

Performance Property	Units	US	(metric)
Velocity of Propagation	%	84	
Dielectric Constant	NA	1.42	
Time Delay	nS/ft (nS/m)	1.21	(3.97)
Impedance	ohms	50	
Capacitance	pF/ft (pF/m)	24.2	(79.4)
Inductance	uH/ft (uH/m)	0.060	(0.20)
Shielding Effectiveness	dB	>90	
DC Resistance			
Inner Conductor	ohms/1000ft (/km)	3.2	(10.5)
Outer Conductor	ohms/1000ft (/km)	3.89	(12.8)
Voltage Withstand	Volts DC	1500	
Jacket Spark	Volts RMS	5000	
Peak Power	kW	5.6	

Attenuation vs. Frequency (typical)

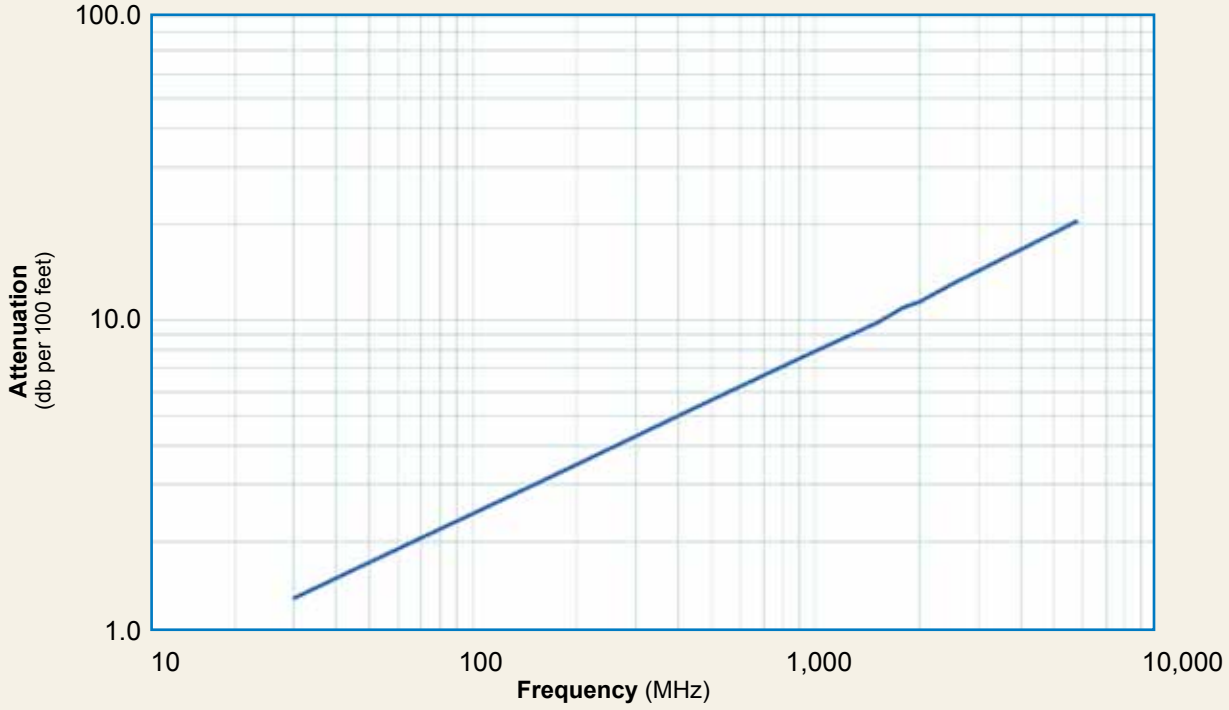

Frequency (MHz)	30	50	150	220	450	900	1500	1800	2000	2500	5800
Attenuation dB/100 ft	1.3	1.7	3.0	3.7	5.3	7.6	9.9	10.9	11.5	12.9	20.4
Attenuation dB/100 m	4.4	5.7	9.9	12.0	17.3	24.8	32.4	35.6	37.7	42.4	66.8
Avg. Power kW	1.49	1.15	0.66	0.54	0.38	0.26	0.20	0.18	0.17	0.15	0.10

Calculate Attenuation =

$(0.242080) \cdot \sqrt{FMHz} + (0.000330) \cdot FMHz$ (interactive calculator available at http://www.timesmicrowave.com/cable_calculators)

Attenuation:

VSWR=1.0 ; Ambient = +25°C (77°F)

Power: VSWR=1.0; Ambient = +40°C; Inner Conductor = 100°C (212°F); Sea Level; dry air; atmospheric pressure; no solar loading

TIMES MICROWAVE SYSTEMS

LMR®-240
Flexible Low Loss Communications Coax

Connectors

Interface	Description	Part Number	Stock Code	VSWR** Freq. (GHz)	Coupling Nut	Inner Contact Attach	Outer Contact Attach	Finish* Body /Pin	Length in	Length (mm)	Width in	Width (mm)	Weight lb	Weight (g)
F Male	Straight Plug	TC-240-FM	3190-924	<1.25:1 (2.5)	Knurl	Solder	Crimp	N/G	1.1	(28)	0.45	(11.4)	0.014	(6.4)
N Male	Straight Plug	EZ-240-NMH-D	3190-1127	<1.25:1 (2.5)	Hex/Knurl	Spring Finger	Crimp	A/G	1.5	(38.1)	0.78	(19.8)	0.086	(39.0)
N Male	Right Angle	TC-240-NM-RA	3190-2426	<1.35:1 (6)	Hex	Solder	Crimp	A/G	1.3	(32.4)	1.22	(31.0)	0.092	(41.7)
N Male	Right Angle	TC-240-NMH-RA-D	3190-2426	<1.35:1 (6)	Hex/Knurl	Solder	Crimp	A/G	1.2	(32.4)	1.22	(31.0)	0.091	(41.7)
N Male	Straight Plug	TC-240-NMH-D	3190-382#	<1.25:1 (2.5)	Hex/Knurl	Solder	Crimp	N/S	1.5	(38)	0.75	(19.1)	0.086	(39.0)
N Male	Straight Plug	TC-240-NMC	3190-244	<1.25:1 (2.5)	Knurl	Solder	Clamp	S/G	1.5	(38)	0.75	(19.1)	0.082	(37.2)
1.0/2.3 DIN	Straight Plug	EZ-240-1023M	3190-2512	<1.35:1 (2.5)	knurl	Spring Finger	Crimp	N/G	1.1	(228.5)	0.33	(8.5)	0.014	(6.63)
N Female	Bulkhead Jack	TC-240-NF-BH	3190-419	<1.25:1 (2.5)	NA	Solder	Crimp	A/G	1.7	(44)	0.88	(22.2)	0.115	(52.2)
N Female	Panel Mount	TC-240-NF-BHF(A)	3190-866#	<1.25:1 (2.5)	NA	Solder	Crimp	A/G	1.7	(44)	0.88	(22.2)	0.115	(52.2)
BNC Male	Straight Plug	TC-240-BMC	3190-242	<1.25:1 (2.5)	Knurl	Solder	Clamp	S/G	1.7	(43)	0.56	(14.2)	0.040	(18.1)
BNC Male	Straight Plug	TC-240-BM(A)	3190-867	<1.25:1 (2.5)	Knurl	Solder	Crimp	A/G	1.7	(43)	0.5 6	(14.2)	0.043	(19.5)
TNC Male	Straight Plug	EZ-240-TM	3190-1128	<1.25:1 (2.5)	Knurl	Spring Finger	Crimp	N/G	1.4	(34.3)	0.59	(15.0)	0.043	(19.5)
TNC Male	Straight Plug	TC-240-TM	3190-275	<1.25:1 (2.5)	Knurl	Solder	Crimp	N/G	1.7	(43)	0.59	(15.0)	0.043	(19.5)
TNC Male	Right Angle	TC-240-TM-RA	3190-604	<1.35:1 (2.5)	Knurl	Solder	Crimp	N/G	1.3	(33)	0.57	(14.5)	0.055	(24.9)
TNC Male	Reverse Polarity	EZ-240-TM-RP	3190-970	<1.25:1 (2.5)	Knurl	Spring Finger	Crimp	A/G	1.4	(36)	0.59	(15.0)	0.043	(19.5)
QMA Male	Straight Plug	EZ-240-QM	3190-1533	<1.25: (6)	Knurl	Spring Finger	Crimp	N/G	1.2	(30.0)	0.41	(10.5)	0.014	(6.35)
QMA Male	Right Angle	EZ-240-QM-RA	3190-1539	<1.25: (<6)	Knurl	Spring Finger	Crimp	N/G	0.8	(20.3)	0.65	(16.5)	0.019	(8.62)
SMA Male	Straight Plug	EZ-240-SM	3190-1530	<1:25: (6)	Hex	Spring Finger	Crimp	N/G	1.0	(25.4)	0.32	(8.1)	0.016	(7.26)
SMA Male	Straight Plug	TC-240-SM	3190-380#	<1.25:1 (10)	Hex	Solder	Crimp	SS/G	1.0	(25)	0.32	(8.1)	0.016	(7.3)
SMA Male	Right Angle	TC-240-SM-RA	3190-381#	<1.35:1 (6)	Hex	Solder	Crimp	SS/G	0.8	(20)	0.65	(16.5)	0.019	(8.6)
SMA Male	Reverse Polarity	TC-240-SM-RP	3190-326	<1.25:1 (2.5)	Hex	Solder	Crimp	SS/G	1.0	(25)	0.32	(8.1)	0.016	(7.3)
SMA Female	Bulkhead Jack	TC-240-SF-BH	3190-824#	<1.25:1 (2.5)	NA	Solder	Crimp	SS/G	1.1	(29)	0.31	(7.9)	0.019	(8.6)
Mini-UHF	Straight Plug	TC-240-MUHF	3190-445	<1.25:1 (2.5)	Knurl	Solder	Crimp	N/G	1.1	(28)	0.45	(11.4)	0.014	(6.4)

* Finish metals: N=Nickel, S=Silver, G=Gold, SS=Stainless Steel, A=Alballoy **VSWR spec based on 3 foot cable with a connector pair #Available in bulk pack

TC-240-SM-RA

TC-240-SM-RP

TC-240-SF-BH

TC-240-MUHF

EZ-240-QM

EZ-240-QM-RA

EZ-240-SM

TC-240-NF-BHF (A)

GK-S240TT

Hardware Accessories

Type	Part Number	Stock Code	Description
Ground Kit	GK-S240TT	GK-S240TT	Standard Ground Kit (each)

CT-240/200/195/100

CCT-01

RB-CST

DBT-U

CST-240

Install Tools

Type	Part Number	Stock Code	Description
Crimp Tool	CT-240/200/195/100	3190-667	Crimp tool for LMR-100, 195, 200 and 240 connectors
Strip Tool	CST-240	3192-070	Strip tool
Deburr Tool	DBT-U	3192-001	Removes center conductor rough edges
Cutting Tool	CCT-01	3190-1544	Cable end flush cut tool
Replacement Blade	RB-01	3190-1609	Replacement blade for cutting tool
Replacement	RB-CST	3192-086	Replacement blade kit for all CST strip tools