PASTERNACK
an INFINITE brand

SMA Male Right Angle to SMA Female Bulkhead Low Loss Cable 36 Inch Length Using PE-C100 Coax

RF Cable Assemblies Technical Data Sheet PE3C7571-36

Configuration

- Connector 1: SMA Male Right Angle
- Connector 2: SMA Female Bulkhead
- Cable Type: PE-C100-LSZH

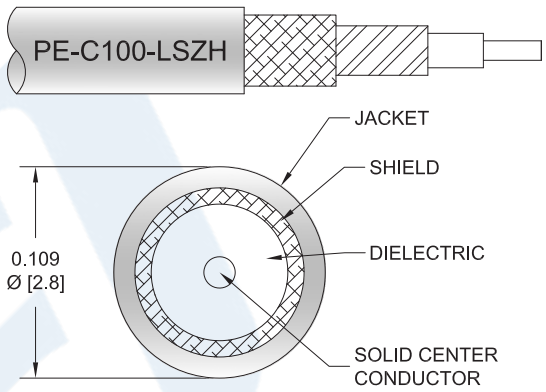

Features

- Max Frequency 5.8 GHz
- Shielding Effectivity > 90 dB
- 66% Phase Velocity
- Double Shielded
- PVC Jacket

Applications

- General Purpose
- Laboratory Use

Description

Pasternack's PE3C7571-36 SMA male right angle to SMA female bulkhead 36 inch cable using PE-C100 coax is part of our full line of RF components available for same-day shipping. Pasternack's flexible RF cable assemblies are ideal for applications where tight bends and flexure are required. This Pasternack SMA to SMA cable assembly has a male to female gender configuration with 50 ohm flexible PE-C100-LSZH coax. The PE3C7571-36 SMA male to SMA female cable assembly operates to 5.8 GHz. The right angle SMA interface on the PE-C100-LSZH cable allows for easier connections in tight spaces. Our RF cable assembly with SMA bulkhead interface allows designers to create external connections on their product enclosures, and can be used in a variety of other rack mount and panel mount applications. The double shielding of this Pasternack cable assembly provides excellent shielding effectiveness of better than 90 dB.

Custom versions of most RF cable assemblies can be built and shipped same day. Custom cable assembly lengths can be obtained by specifying the desired length on the web site at time of order or by contacting a sales representative. Other available RF cable assembly value added services include connector orientation or clocking, heat shrink booting and custom labeling. RF testing can also be performed to document the electrical performance of your cable assembly.

Click the following link (or enter part number in "SEARCH" on website) to obtain additional part information including price, inventory and certifications: SMA Male Right Angle to SMA Female Bulkhead Low Loss Cable 36 Inch Length Using PE-C100 Coax PE3C7571-36

Pasternack Enterprises, Inc. • P.O. Box 16759, Irvine, CA 92623
Phone: (866) 727-8376 or (949) 261-1920 • **Fax:** (949) 261-7451
Sales@Pasternack.com • Techsupport@Pasternack.com

© 2020 Pasternack Enterprises All Rights Reserved

SMA Male Right Angle to SMA Female Bulkhead Low Loss Cable 36 Inch Length Using PE-C100 Coax

RF Cable Assemblies Technical Data Sheet PE3C7571-36

Electrical Specifications

Description	Minimum	Typical	Maximum	Units
Frequency Range	DC		5.8	GHz
VSWR			1.45:1	
Velocity of Propagation		66		%
RF Shielding	90			dB
Capacitance		30.8 [101.05]		pF/ft [pF/m]
Jacket Spark			2,000	Vrms

Specifications by Frequency

Description	F1	F2	F3	F4	F5	Units
Frequency	0.25	0.5	1	2.5	5.8	GHz
Insertion Loss (Max.)	0.66	0.81	1.02	1.53	2.28	dB

Electrical Specification Notes:
The Insertion Loss data above is based on the performance specifications of the coax cable and connectors used in this assembly. The Insertion Loss includes an estimated insertion loss of 0.1 dB for the straight connector and 0.2 dB for the right angle connector.

Mechanical Specifications

Cable Assembly

Length*	36 in [914.4 mm]
Diameter	0.689 in [17.5 mm]

Cable

Cable Type	PE-C100-LSZH
Impedance	50 Ohms
Inner Conductor Type	Solid
Inner Conductor Material and Plating	Copper Clad Steel
Dielectric Type	PE
Number of Shields	2
Shield Layer 1	Aluminum Tape
Shield Layer 2	Tinned Copper Braid
Jacket Material	PVC, Black
Jacket Diameter	0.11 in [2.79 mm]
One Time Minimum Bend Radius	0.25 in [6.35 mm]
Repeated Minimum Bend Radius	1 in [25.4 mm]

Click the following link (or enter part number in “SEARCH” on website) to obtain additional part information including price, inventory and certifications: SMA Male Right Angle to SMA Female Bulkhead Low Loss Cable 36 Inch Length Using PE-C100 Coax PE3C7571-36

Pasternack Enterprises, Inc. • P.O. Box 16759, Irvine, CA 92623
Phone: (866) 727-8376 or (949) 261-1920 • **Fax:** (949) 261-7451
Sales@Pasternack.com • Techsupport@Pasternack.com

© 2020 Pasternack Enterprises All Rights Reserved

SMA Male Right Angle to SMA Female Bulkhead Low Loss Cable 36 Inch Length Using PE-C100 Coax

Connectors

Description	Connector 1	Connector 2
Type	SMA Male Right Angle	SMA Female Bulkhead
Impedance	50 Ohms	50 Ohms
Contact Material and Plating	Brass, Gold	Beryllium Copper, Gold
Dielectric Type	Teflon	PTFE
Outer Conductor Material and Plating		Brass, Gold
Body Material and Plating	Brass, Gold	Brass, Gold
Coupling Nut Material and Plating	Brass, Gold	
Hex Size	5/16 in	
Torque	5 in-lbs [0.57 Nm]	

Compliance Certifications (see product page for current document)

Plotted and Other Data

Notes:

Click the following link (or enter part number in “SEARCH” on website) to obtain additional part information including price, inventory and certifications: SMA Male Right Angle to SMA Female Bulkhead Low Loss Cable 36 Inch Length Using PE-C100 Coax PE3C7571-36

Pasternack Enterprises, Inc. • P.O. Box 16759, Irvine, CA 92623
Phone: (866) 727-8376 or (949) 261-1920 • **Fax:** (949) 261-7451
Sales@Pasternack.com • Techsupport@Pasternack.com

© 2020 Pasternack Enterprises All Rights Reserved

SMA Male Right Angle to SMA Female Bulkhead Low Loss Cable 36 Inch Length Using PE-C100 Coax

How to Order

Part Number Configuration: **PE3C7571 - xx uu**

- **uu** — Unit of Measure:
  - cm = Centimeters
  - <blank> = Inches
- **xx** — Length
- **PE3C7571** — Base Number

Example: PE3C7571-12 = 12 inches long cable
PE3C7571-100cm = 100 cm long cable

SMA Male Right Angle to SMA Female Bulkhead Low Loss Cable 36 Inch Length Using PE-C100 Coax from Pasternack Enterprises has same day shipment for domestic and International orders. Our RF, microwave and millimeter wave products maintain a 99.4% availability and are part of the broadest selection in the industry.

Click the following link (or enter part number in “SEARCH” on website) to obtain additional part information including price, inventory and certifications: SMA Male Right Angle to SMA Female Bulkhead Low Loss Cable 36 Inch Length Using PE-C100 Coax PE3C7571-36

URL: https://www.pasternack.com/sma-male-sma-female-pe-c100-cable-assembly-pe3c7571-36-p.aspx

The information contained in this document is accurate to the best of our knowledge and representative of the part described herein. It may be necessary to make modifications to the part and/or the documentation of the part, in order to implement improvements. Pasternack reserves the right to make such changes as required. Unless otherwise stated, all specifications are nominal. Pasternack does not make any representation or warranty regarding the suitability of the part described herein for any particular purpose, and Pasternack does not assume any liability arising out of the use of any part or documentation.

Pasternack Enterprises, Inc. • P.O. Box 16759, Irvine, CA 92623
Phone: (866) 727-8376 or (949) 261-1920 • **Fax:** (949) 261-7451
Sales@Pasternack.com • Techsupport@Pasternack.com

© 2020 Pasternack Enterprises All Rights Reserved

PE3C7571-36 CAD Drawing

SMA Male Right Angle to SMA Female Bulkhead Low Loss
Cable 36 Inch Length Using PE-C100 Coax

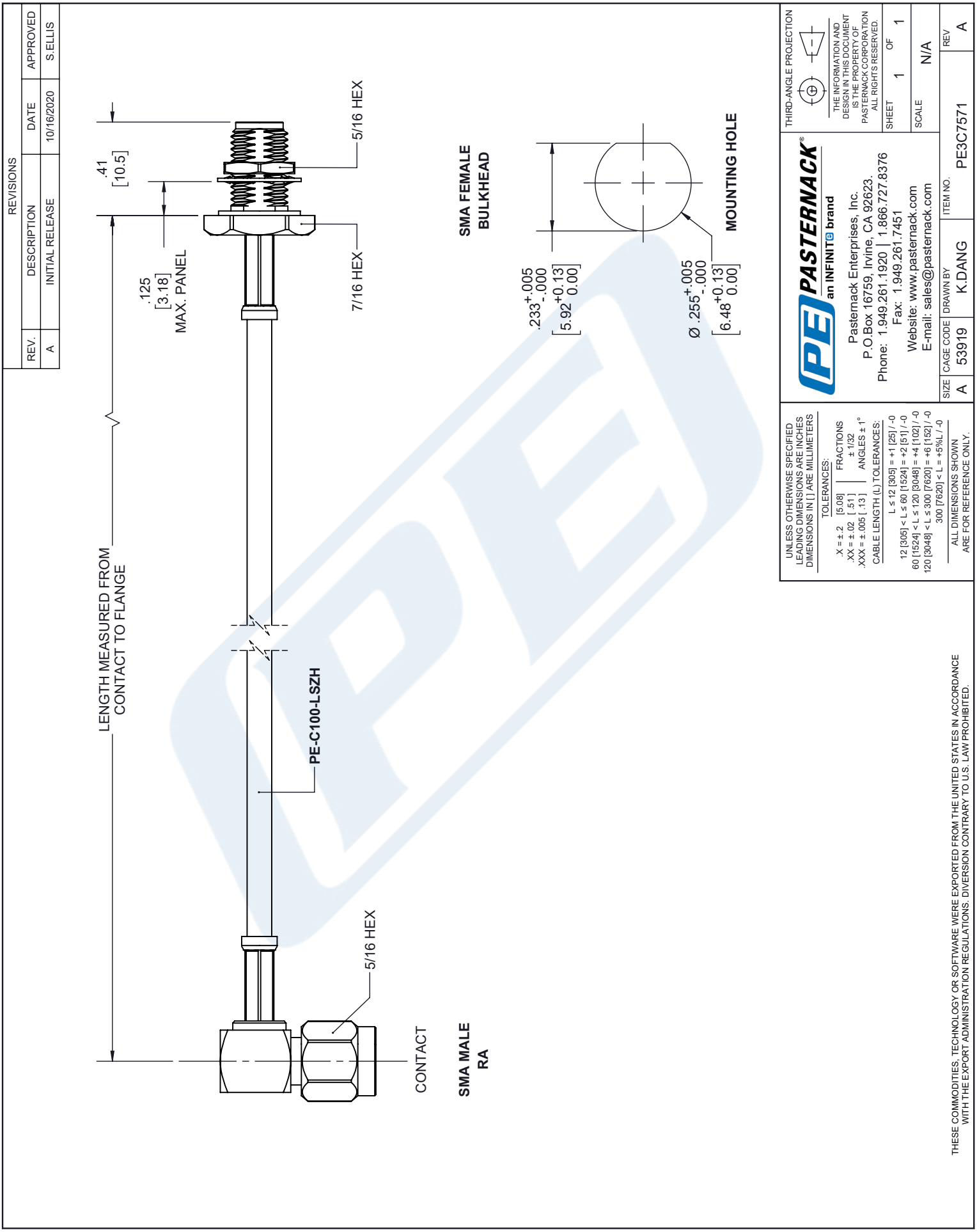

© 2020 Pasternack Enterprises All Rights Reserved