4.3-10 Male Right Angle to N Female Bulkhead Low PIM Cable 36 Inch Length Using TFT-5G-402 Coax Using Times Microwave Components

PE3C8316-36

Configuration

- Connector 1: 4.3-10 Male Right Angle
- Connector 2: N Female Bulkhead
- Cable Type: TFT-5G-402
- Coax Flex Type: Flexible

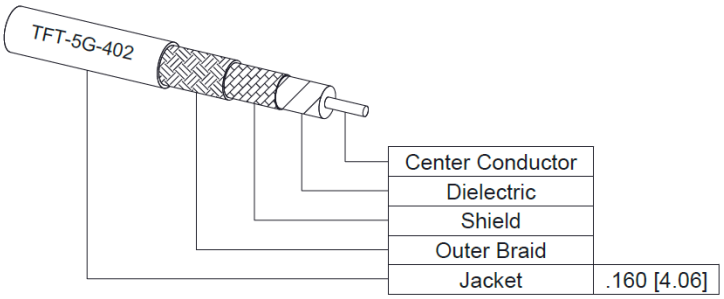

Features

- Max Frequency 5.8 GHz
- Low PIM: -160 dBc Max
- Shielding Effectivity > 80 dB
- 76% Phase Velocity
- Double Shielded
- FEP Jacket

Applications

- General Purpose
- Laboratory Use
- Low PIM Applications
- Indoor and Outdoor Use
- Plenum Rated Applications

Description

Pasternack's PE3C8316-36 4.3-10 male right angle to type N female bulkhead 36 inch cable using TFT-5G-402 coax is part of our full line of RF components available for same-day shipping. Pasternack's flexible RF cable assemblies are ideal for applications where tight bends and flexure are required. This Pasternack 4.3-10 to type N cable assembly has a male to female gender configuration with 50 ohm flexible TFT-5G-402 coax. The PE3C8316-36 4.3-10 male to type N female cable assembly operates to 5.8 GHz. Our low PIM design also offers excellent passive intermodulation performance with PIM levels better than -160 dBc. The right angle 4.3-10 interface on the TFT-5G-402 cable allows for easier connections in tight spaces. Our RF cable assembly with type N bulkhead interface allows designers to create external connections on their product enclosures, and can be used in a variety of other rack mount and panel mount applications. The double shielding of this Pasternack cable assembly provides excellent shielding effectiveness of better than 80 dB.

Custom versions of most RF cable assemblies can be built and shipped same day. Custom cable assembly lengths can be obtained by specifying the desired length on the web site at time of order or by contacting a sales representative. Other available RF cable assembly value added services include connector orientation or clocking, heat shrink booting and custom labeling. RF testing can also be performed to document the electrical performance of your cable assembly.

Electrical Specifications

Description	Minimum	Typical	Maximum	Units
Frequency Range	DC		5.8	GHz
VSWR			1.4:1	
Velocity of Propagation		76		%
RF Shielding	80			dB
Passive Intermodulation IM3 (2x43dBm Tones) at 850 MHz or 1900 MHz			-160	dBc

© 2023 Infinite Electronics, Inc. Pasternack is a registered trademark of Infinite Electronics, Inc.
+1 (866) 558-2786 | sales@pasternack.com | pasternack.com

4.3-10 Male Right Angle to N Female Bulkhead Low PIM Cable 36 Inch Length Using TFT-5G-402 Coax Using Times Microwave Components

PE3C8316-36

Electrical Specifications

Description	Minimum	Typical	Maximum	Units
Capacitance		26.7 [87.6]		pF/ft [pF/m]

Specifications by Frequency

Description	F1	F2	F3	F4	F5	Units
Frequency	0.25	0.5	1	2.5	5.8	GHz
Insertion Loss (Typ.)	0.33	0.42	0.56	0.83	1.23	dB

Electrical Specification Notes:
The Insertion Loss data above is based on the performance specifications of the coax and connectors used in this assembly. The Insertion Loss includes an estimated insertion loss of 0.1*SQRT(FGHz) dB for the right angle connector and 0.1 dB for the straight connector.

Mechanical Specifications

Cable Assembly

Length	36 in [914.4 mm]
Width/Diameter	0.86 in [21.84 mm]
Weight	lbs [0 g]

Cable

Cable Type	TFT-5G-402
Impedance	50 Ohms
Inner Conductor Type	Solid
Inner Conductor Material and Plating	Copper
Dielectric Type	PTFE
Number of Shields	2
Jacket Material	FEP, Blue
Jacket Diameter	0.16 in [4.06 mm]
One Time Minimum Bend Radius	0.75 in [19.05 mm]

© 2023 Infinite Electronics, Inc. Pasternack is a registered trademark of Infinite Electronics, Inc.

4.3-10 Male Right Angle to N Female Bulkhead Low PIM Cable 36 Inch Length Using TFT-5G-402 Coax Using Times Microwave Components

PE3C8316-36

Connectors

Description	Connector 1	Connector 2
Type	4.3-10 Male Right Angle	N Female Bulkhead
Impedance	50 Ohms	50 Ohms
Configuration	Right Angle	Straight
Mating Cycles	500	
Contact Material and Plating	Brass, Silver	Brass, Silver
Contact Plating Specification	200 µin	5 µm
Dielectric Type	PTFE	PTFE
Outer Conductor Material and Plating		Brass, Tri-Metal
Outer Conductor Plating Specification		3 µm
Body Material and Plating	Brass, Tri-Metal	Brass, Tri-Metal
Body Plating Specification	80 µin	3 µm
Coupling Nut Material and Plating	Brass, Tri-Metal	
Coupling Nut Plating Specification	80 µin	
Torque	44 in-lbs 4.97 Nm	10 in-lbs 1.13 Nm

Environmental Specifications

Operating Range Temperature -40 to +85 deg C

Compliance Certifications (see product page for current document)

Plotted and Other Data

Notes:

© 2023 Infinite Electronics, Inc. Pasternack is a registered trademark of Infinite Electronics, Inc.
+1 (866) 558-2786 | sales@pasternack.com | pasternack.com

4.3-10 Male Right Angle to N Female Bulkhead Low PIM Cable 36 Inch Length Using TFT-5G-402 Coax Using Times Microwave Components

PE3C8316-36

Typical Performance Data

How to Order

Part Number Configuration: **PE3C8316 - xx uu**

- **uu** — Unit of Measure:
  - cm = Centimeters
  - <blank> = Inches
- **xx** — Length
- **PE3C8316** — Base Number

Example: PE3C8316-12 = 12 inches long cable
PE3C8316-100cm = 100 cm long cable

4.3-10 Male Right Angle to N Female Bulkhead Low PIM Cable 36 Inch Length Using TFT-5G-402 Coax Using Times Microwave Components from Pasternack Enterprises has same day shipment for domestic and International orders. Our RF, microwave and millimeter wave products maintain a 99.4% availability and are part of the broadest selection in the industry.

Click the following link (or enter part number in "SEARCH" on website) to obtain additional part information including price, inventory and certifications: 4.3-10 Male Right Angle to N Female Bulkhead Low PIM Cable 36 Inch Length Using TFT-5G-402 Coax Using Times Microwave Components PE3C8316-36

URL: https://www.pasternack.com/4.3-10-male-right-angle-to-n-female-bulkhead-low-pim-cable-36-inch-length-using-tft-5g-402-pe3c8316-36.html

The information contained within this document is accurate to the best of our knowledge and representative of the part described herein. It may be necessary to make modifications to the part and/or the documentation of the part in order to impliment improvements. Pasternack Enterprises reserves the right to make such changes as required. Unless otherwise stated, all specifications are nominal. Pasternack Enterprises does not make any representation or warranty regarding the suitability of the part described herein for any particular purpose, and Pasternack Enterprises does not assume liability arising out of the use of any part or document.

© 2023 Infinite Electronics, Inc. Pasternack is a registered trademark of Infinite Electronics, Inc.

PE3C8316-36 CAD Drawing

4.3-10 Male Right Angle to N Female Bulkhead Low PIM Cable 36 Inch Length
Using TFT-5G-402 Coax Using Times Microwave Components

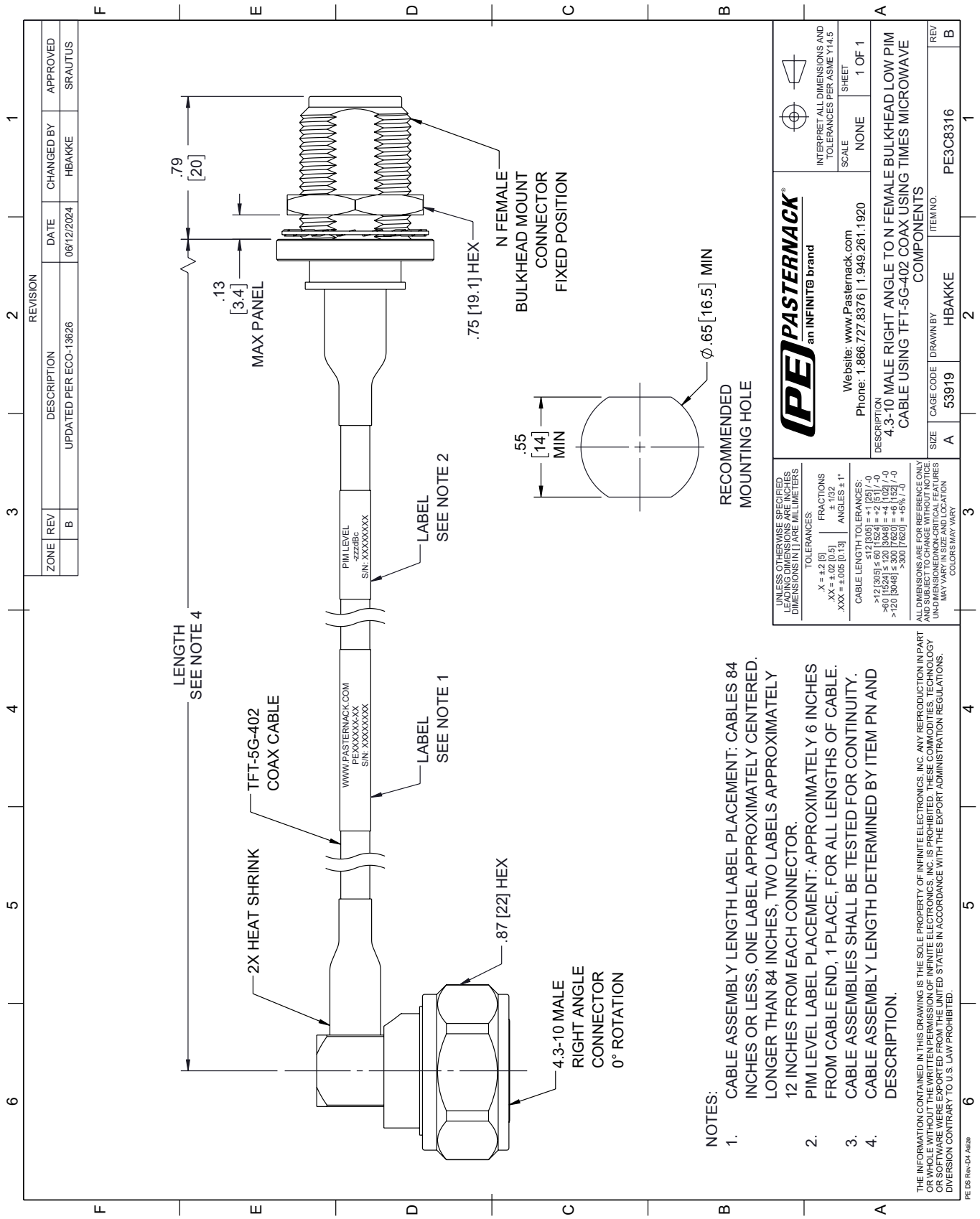

© 2023 Infinite Electronics, Inc. Pasternack is a registered trademark of Infinite Electronics, Inc.