PASTERNACK
an INFINITE brand

Outdoor Rated 7/16 DIN Male to N Female Bulkhead Low PIM Cable 48 Inch Length Using SPO-250 Coax Using Times Microwave Parts

RF Cable Assemblies Technical Data Sheet PE3C8503-48

Configuration

- Connector 1: 7/16 DIN Male
- Connector 2: N Female Bulkhead
- Cable Type: SPO-250

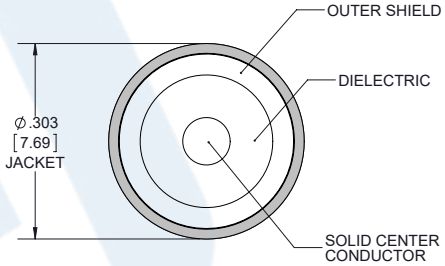

Features

- Max Frequency 5.8 GHz
- Low PIM: -160 dBc Max
- 83% Phase Velocity
- PE Jacket
- 100% Tested with PIM Test Results Marked on Cable
- Lightweight and Extremely Flexible
- Low Loss with Excellent VSWR
- IP67 (when mated)
- Using Times Microwave Components

Applications

- General Purpose
- Laboratory Use
- Low PIM Applications
- Outdoor Rated Applications
- Distributed Antenna Systems (DAS)
- Multi-Carrier Communication Systems
- PIM Testing

Description

Pasternack's PE3C8503-48 7/16 DIN male to type N female bulkhead 48 inch cable using SPO-250 coax is part of our full line of RF components available for same-day shipping. Pasternack's corrugated RF cable assemblies are ideal for applications where durability and high power are needed. This Pasternack 7/16 DIN to type N cable assembly has a male to female gender configuration with 50 ohm corrugated SPO-250 coax. The PE3C8503-48 7/16 DIN male to type N female cable assembly operates to 5.8 GHz. Our low PIM design also offers excellent passive intermodulation performance with PIM levels better than -160 dBc. Our RF cable assembly with type N bulkhead interface allows designers to create external connections on their product enclosures, and can be used in a variety of other rack mount and panel mount applications.

Custom versions of most RF cable assemblies can be built and shipped same day. Custom cable assembly lengths can be obtained by specifying the desired length on the web site at time of order or by contacting a sales representative. Other available RF cable assembly value added services include connector orientation or clocking, heat shrink booting and custom labeling. RF testing can also be performed to document the electrical performance of your cable assembly.

Electrical Specifications

Description	Minimum	Typical	Maximum	Units
Frequency Range	DC		5.8	GHz
VSWR			1.4:1	
Velocity of Propagation		83		%
Passive Intermodulation			-160	dBc

Click the following link (or enter part number in "SEARCH" on website) to obtain additional part information including price, inventory and certifications: Outdoor Rated 7/16 DIN Male to N Female Bulkhead Low PIM Cable 48 Inch Length Using SPO-250 Coax Using Times Microwave Parts PE3C8503-48

Pasternack Enterprises, Inc. • P.O. Box 16759, Irvine, CA 92623
Phone: (866) 727-8376 or (949) 261-1920 • **Fax:** (949) 261-7451
Sales@Pasternack.com • Techsupport@Pasternack.com

© 2020 Pasternack Enterprises All Rights Reserved

Outdoor Rated 7/16 DIN Male to N Female Bulkhead Low PIM Cable 48 Inch Length Using SPO-250 Coax Using Times Microwave Parts

Capacitance	24 [78.74]	pF/ft [pF/m]
Inductance	0.054 [0.18]	uH/ft [uH/m]

Specifications by Frequency

Description	F1	F2	F3	F4	F5	Units
Frequency	0.25	0.5	1	2.5	5.8	GHz
Insertion Loss (Typ.)	0.22	0.32	0.45	0.73	1.15	dB

Electrical Specification Notes:
The Insertion Loss data above is based on the performance specifications of the coax and connectors used in this assembly. The Insertion Loss includes an estimated insertion loss of 0.1*SQRT(FGHz) dB per connector.

Mechanical Specifications

Cable Assembly

Length*	48 in [121.92 cm]
Diameter	0 in [0 mm]

Cable

Cable Type	SPO-250
Impedance	50 Ohms
Inner Conductor Type	Solid
Inner Conductor Material and Plating	Copper Clad Aluminum
Dielectric Type	Foam PE
Number of Shields	1
Outer Conductor Material and Plating	Copper
Jacket Material	PE, Black
Jacket Diameter	0.303 in [7.7 mm]
One Time Minimum Bend Radius	1.25 in [31.75 mm]
Bending Moment	0.5 lbs-ft [0.68 N-m]

Click the following link (or enter part number in “SEARCH” on website) to obtain additional part information including price, inventory and certifications: Outdoor Rated 7/16 DIN Male to N Female Bulkhead Low PIM Cable 48 Inch Length Using SPO-250 Coax Using Times Microwave Parts PE3C8503-48

Pasternack Enterprises, Inc. • P.O. Box 16759, Irvine, CA 92623
Phone: (866) 727-8376 or (949) 261-1920 • **Fax:** (949) 261-7451
Sales@Pasternack.com • Techsupport@Pasternack.com

© 2020 Pasternack Enterprises All Rights Reserved

Outdoor Rated 7/16 DIN Male to N Female Bulkhead Low PIM Cable 48 Inch Length Using SPO-250 Coax Using Times Microwave Parts

Connectors

Description	Connector 1	Connector 2
Type	7/16 DIN Male	N Female Bulkhead
Impedance	50 Ohms	50 Ohms
Contact Material and Plating	Brass, Silver	Phosphor Bronze, Silver
Contact Plating Specification	196 µin	196 µin
Dielectric Type	PTFE	PTFE
Outer Conductor Material and Plating		Brass, Tri-Metal
Outer Conductor Plating Specification		118 µin
Body Material and Plating	Brass, Tri-Metal	Brass, Tri-Metal
Body Plating Specification	118 µin	118 µin
Coupling Nut Material and Plating	Brass, Nickel	
Coupling Nut Plating Specification	118 µin	
Torque		6 in-lbs [0.68 Nm]

Environmental Specifications

Temperature

Operating Range -40 to +85 deg C

Compliance Certifications (see product page for current document)

Plotted and Other Data

Notes:

Click the following link (or enter part number in “SEARCH” on website) to obtain additional part information including price, inventory and certifications: Outdoor Rated 7/16 DIN Male to N Female Bulkhead Low PIM Cable 48 Inch Length Using SPO-250 Coax Using Times Microwave Parts PE3C8503-48

Pasternack Enterprises, Inc. • P.O. Box 16759, Irvine, CA 92623
Phone: (866) 727-8376 or (949) 261-1920 • **Fax:** (949) 261-7451
Sales@Pasternack.com • Techsupport@Pasternack.com

© 2020 Pasternack Enterprises All Rights Reserved

Outdoor Rated 7/16 DIN Male to N Female Bulkhead Low PIM Cable 48 Inch Length Using SPO-250 Coax Using Times Microwave Parts

How to Order

Part Number Configuration: **PE3C8503 - xx uu**

- uu: Unit of Measure: cm = Centimeters; <blank> = Inches
- xx: Length
- PE3C8503: Base Number

Example: PE3C8503-12 = 12 inches long cable
PE3C8503-100cm = 100 cm long cable

Outdoor Rated 7/16 DIN Male to N Female Bulkhead Low PIM Cable 48 Inch Length Using SPO-250 Coax Using Times Microwave Parts from Pasternack Enterprises has same day shipment for domestic and International orders. Our RF, microwave and millimeter wave products maintain a 99.4% availability and are part of the broadest selection in the industry.

Click the following link (or enter part number in “SEARCH” on website) to obtain additional part information including price, inventory and certifications: Outdoor Rated 7/16 DIN Male to N Female Bulkhead Low PIM Cable 48 Inch Length Using SPO-250 Coax Using Times Microwave Parts PE3C8503-48

URL: https://www.pasternack.com/7-16-din-male-n-female-spo250-cable-assembly-pe3c8503-48-p.aspx

The information contained in this document is accurate to the best of our knowledge and representative of the part described herein. It may be necessary to make modifications to the part and/or the documentation of the part, in order to implement improvements. Pasternack reserves the right to make such changes as required. Unless otherwise stated, all specifications are nominal. Pasternack does not make any representation or warranty regarding the suitability of the part described herein for any particular purpose, and Pasternack does not assume any liability arising out of the use of any part or documentation.

Pasternack Enterprises, Inc. • P.O. Box 16759, Irvine, CA 92623
Phone: (866) 727-8376 or (949) 261-1920 • **Fax:** (949) 261-7451
Sales@Pasternack.com • Techsupport@Pasternack.com

© 2020 Pasternack Enterprises All Rights Reserved

PE3C8503-48 CAD Drawing
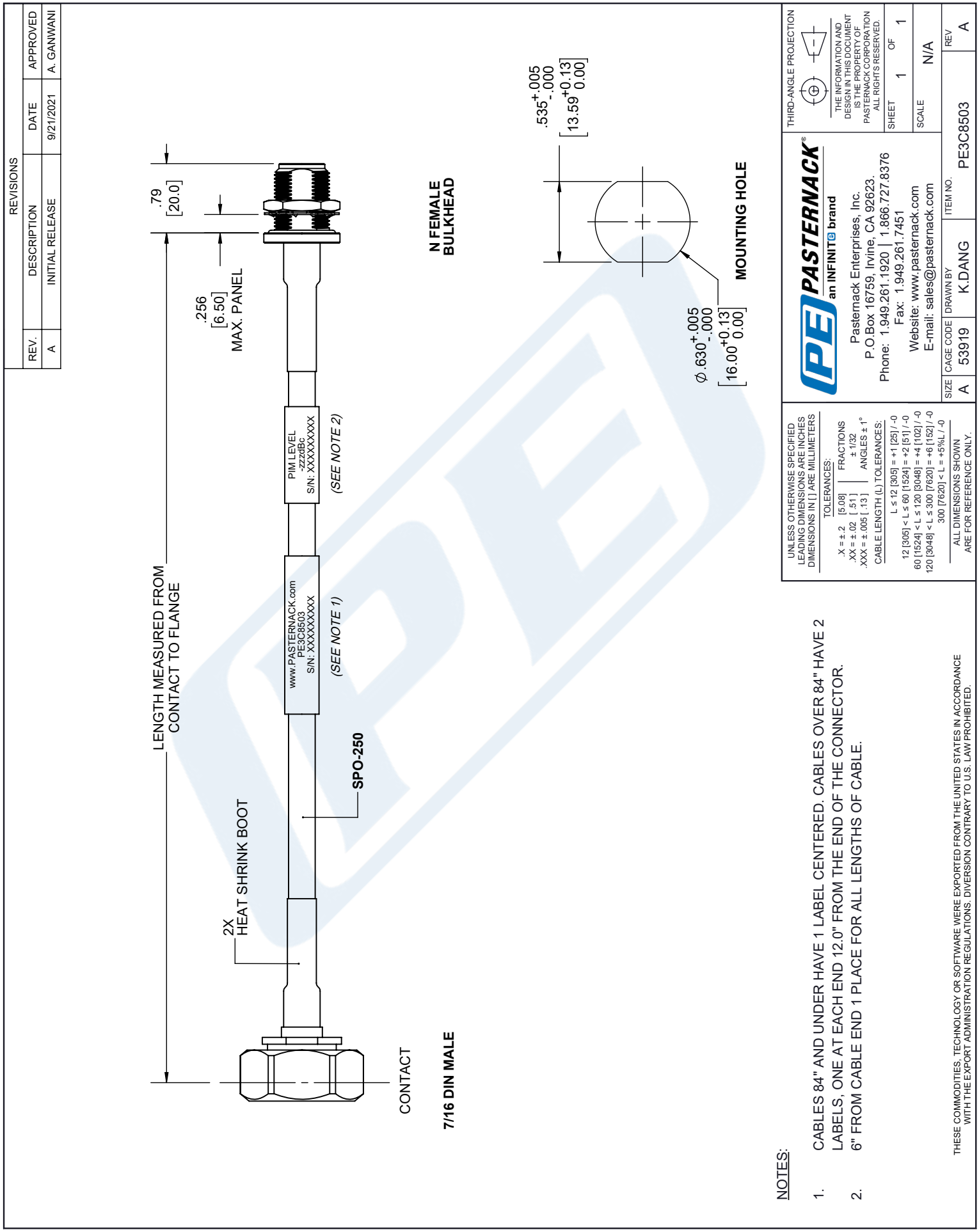
Outdoor Rated 7/16 DIN Male to N Female Bulkhead Low PIM Cable
48 Inch Length Using SPO-250 Coax Using Times Microwave Parts