PASTERNACK®
THE ENGINEER'S RF SOURCE

SMA Male Connector Crimp/Solder Attachment for PE-C400, PE-B400, PE-B405, LMR-400, LMR-400-DB, LMR-400-UF, 0.400 inch

RF Connectors Technical Data Sheet PE44668

Configuration

- SMA Male Connector
- 50 Ohms
- Straight Body Geometry
- PE-C400, PE-B400, PE-B405, LMR-400, LMR-400-DB, LMR-400-UF, 0.400 inch Interface Type
- Crimp/Solder Attachment
- 5/16 inch Hex

Features

- Max. Operating Frequency 12.4 GHz
- Gold Plated Brass Contact

Applications

- General Purpose Test
- Custom Cable Assemblies

Description

Pasternack's PE44668 SMA male connector with crimp/solder attachment for PE-C400, PE-B400, PE-B405, LMR-400, LMR-400-DB, LMR-400-UF and 0.400 inch is part of our full line of RF components available for same-day shipping. Our SMA male connector operates up to a maximum frequency of 12.4 GHz.

Our SMA male connector PE44668 datasheet specifications and drawing with dimensions are shown below in this PDF. Pasternack's broad catalog of RF, microwave and millimeter wave connectors allows designers to configure and customize their signal connections however they like. Whether the need is to provide an I/O for a board design, or simply create a custom cable assembly configuration, Pasternack has the right connector for the job. Pasternack can also expertly build your custom cable assemblies for you and ship same-day.

Electrical Specifications

Description	Minimum	Typical	Maximum	Units
Frequency Range	DC		12.4	GHz

Mechanical Specifications

Size	
Length	1.74 in [44.2 mm]
Width/Dia.	0.705 in [17.91 mm]
Weight	0.07 lbs [31.75 g]
Mating Torque	3 to 5 in-lbs [0.34 to 0.57 Nm]

Click the following link (or enter part number in "SEARCH" on website) to obtain additional part information including price, inventory and certifications: SMA Male Connector Crimp/Solder Attachment for PE-C400, PE-B400, PE-B405, LMR-400, LMR-400-DB, LMR-400-UF, 0.400 inch PE44668

Pasternack Enterprises, Inc. • P.O. Box 16759, Irvine, CA 92623
Phone: (866) 727-8376 or (949) 261-1920 • **Fax:** (949) 261-7451
Sales@Pasternack.com • Techsupport@Pasternack.com

© 2016 Pasternack Enterprises All Rights Reserved

SMA Male Connector Crimp/Solder Attachment for PE-C400, PE-B400, PE-B405, LMR-400, LMR-400-DB, LMR-400-UF, 0.400 inch

Material Specifications

Description	Material	Plating
Contact	Brass	Gold
Insulation	PTFE	
Body	Brass	Gold
Coupling Nut	Brass	Gold

Environmental Specifications

Temperature

Operating Range -65 to +165 deg C

Compliance Certifications (see product page for current document)

Plotted and Other Data

Notes:

SMA Male Connector Crimp/Solder Attachment for PE-C400, PE-B400, PE-B405, LMR-400, LMR-400-DB, LMR-400-UF, 0.400 inch from Pasternack Enterprises has same day shipment for domestic and International orders. Our RF, microwave and millimeter wave products maintain a 99% availability and are part of the broadest selection in the industry.

Click the following link (or enter part number in "SEARCH" on website) to obtain additional part information including price, inventory and certifications: SMA Male Connector Crimp/Solder Attachment for PE-C400, PE-B400, PE-B405, LMR-400, LMR-400-DB, LMR-400-UF, 0.400 inch PE44668

URL: https://www.pasternack.com/sma-male-standard-pe-c400-0.400-connector-pe44668-p.aspx

The information contained in this document is accurate to the best of our knowledge and representative of the part described herein. It may be necessary to make modifications to the part and/or the documentation of the part, in order to implement improvements. Pasternack reserves the right to make such changes as required. Unless otherwise stated, all specifications are nominal. Pasternack does not make any representation or warranty regarding the suitability of the part described herein for any particular purpose, and Pasternack does not assume any liability arising out of the use of any part or documentation.

Pasternack Enterprises, Inc. • P.O. Box 16759, Irvine, CA 92623
Phone: (866) 727-8376 or (949) 261-1920 • **Fax:** (949) 261-7451
Sales@Pasternack.com • Techsupport@Pasternack.com

© 2016 Pasternack Enterprises All Rights Reserved

PE44668 CAD Drawing

SMA Male Connector Crimp/Solder Attachment for PE-C400, PE-B400, PE-B405, LMR-400, LMR-400-DB, LMR-400-UF, 0.400 inch

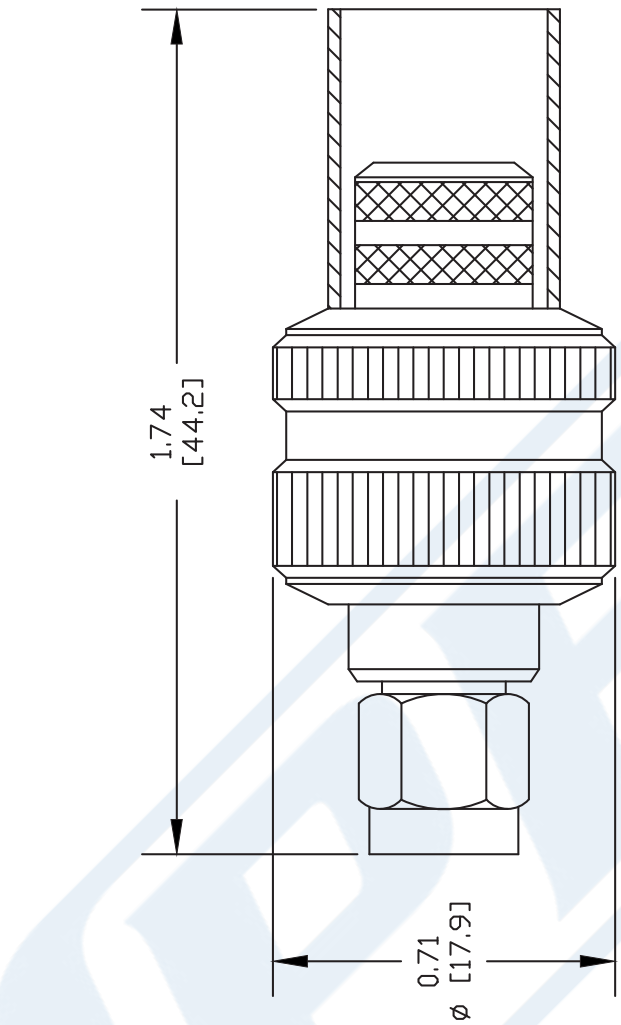

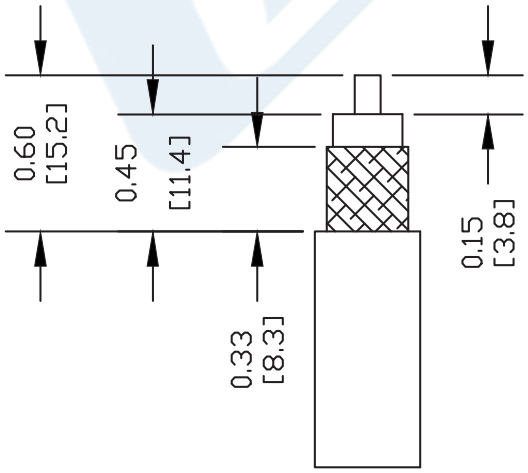

STRIPPING DIMENSIONS

CRIMP SIZE REQUIRED

CONTACT: SOLDER
FERRULE: .429" HEX CRIMP TOOL

NOTES:
1. UNLESS OTHERWISE SPECIFIED ALL DIMENSIONS ARE NOMINAL.
2. ALL SPECIFICATIONS ARE SUBJECT TO CHANGE WITHOUT NOTICE AT ANY TIME.
3. DIMENSIONS ARE IN INCHES [mm].
4. FITS MIL-C-17 AND EQUIVALENT CABLES.

DWG TITLE **PE44668**

REV. - | FSCM NO. 53919 | CAD FILE 102009 | SCALE N/A | SIZE A | 147

PASTERNACK®
Pasternack Enterprises, Inc.
P.O. Box 16759 | Irvine | CA | 92623
Phone: (949) 261-1920 | **Fax:** (949) 261-7451
Website: www.pasternack.com | **E-Mail:** sales@pasternack.com

© 2016 Pasternack Enterprises All Rights Reserved

UHF Male Connector Crimp/Solder Attachment for PE-B400, PE-B405, PE-C400, LMR-400, 0.400 inch

RF Connectors Technical Data Sheet PE44054

Configuration

- UHF Male Connector
- 50 Ohms
- Straight Body Geometry
- PE-B400, PE-B405, PE-C400, LMR-400, 0.400 inch Interface Type
- Crimp/Solder Attachment

Features

- Gold Plated Contact

Applications

- General Purpose Test
- Custom Cable Assemblies

Description

Pasternack's PE44054 UHF male connector with crimp/solder attachment for PE-B400, PE-B405, PE-C400, LMR-400 and 0.400 inch is part of our full line of RF components available for same-day shipping.

Our UHF male connector PE44054 datasheet specifications and drawing with dimensions are shown below in this PDF. Pasternack's broad catalog of RF, microwave and millimeter wave connectors allows designers to configure and customize their signal connections however they like. Whether the need is to provide an I/O for a board design, or simply create a custom cable assembly configuration, Pasternack has the right connector for the job. Pasternack can also expertly build your custom cable assemblies for you and ship same-day.

Mechanical Specifications

Size

Length	1.35 in [34.29 mm]
Width/Dia.	0.7 in [17.78 mm]
Weight	0.041 lbs [18.6 g]

Material Specifications

Description	Material	Plating
Contact		Gold
Insulation	PTFE	
Body	Brass	Nickel
Coupling Nut	Brass	Nickel

Click the following link (or enter part number in "SEARCH" on website) to obtain additional part information including price, inventory and certifications: UHF Male Connector Crimp/Solder Attachment for PE-B400, PE-B405, PE-C400, LMR-400, 0.400 inch PE44054

Pasternack Enterprises, Inc. • P.O. Box 16759, Irvine, CA 92623
Phone: (866) 727-8376 or (949) 261-1920 • **Fax:** (949) 261-7451
Sales@Pasternack.com • Techsupport@Pasternack.com

© 2016 Pasternack Enterprises All Rights Reserved

UHF Male Connector Crimp/Solder Attachment for PE-B400, PE-B405, PE-C400, LMR-400, 0.400 inch

Compliance Certifications (see product page for current document)

Plotted and Other Data

Notes:

UHF Male Connector Crimp/Solder Attachment for PE-B400, PE-B405, PE-C400, LMR-400, 0.400 inch from Pasternack Enterprises has same day shipment for domestic and International orders. Our RF, microwave and millimeter wave products maintain a 99% availability and are part of the broadest selection in the industry.

Click the following link (or enter part number in "SEARCH" on website) to obtain additional part information including price, inventory and certifications: UHF Male Connector Crimp/Solder Attachment for PE-B400, PE-B405, PE-C400, LMR-400, 0.400 inch PE44054

URL: https://www.pasternack.com/uhf-male-pe-b400-pe-b405-lmr-400-uf-connector-pe44054-p.aspx

The information contained in this document is accurate to the best of our knowledge and representative of the part described herein. It may be necessary to make modifications to the part and/or the documentation of the part, in order to implement improvements. Pasternack reserves the right to make such changes as required. Unless otherwise stated, all specifications are nominal. Pasternack does not make any representation or warranty regarding the suitability of the part described herein for any particular purpose, and Pasternack does not assume any liability arising out of the use of any part or documentation.

Pasternack Enterprises, Inc. • P.O. Box 16759, Irvine, CA 92623
Phone: (866) 727-8376 or (949) 261-1920 • **Fax:** (949) 261-7451
Sales@Pasternack.com • Techsupport@Pasternack.com

© 2016 Pasternack Enterprises All Rights Reserved

PE44054 CAD Drawing

UHF Male Connector Crimp/Solder Attachment for PE-B400, PE-B405, PE-C400, LMR-400, 0.400 inch

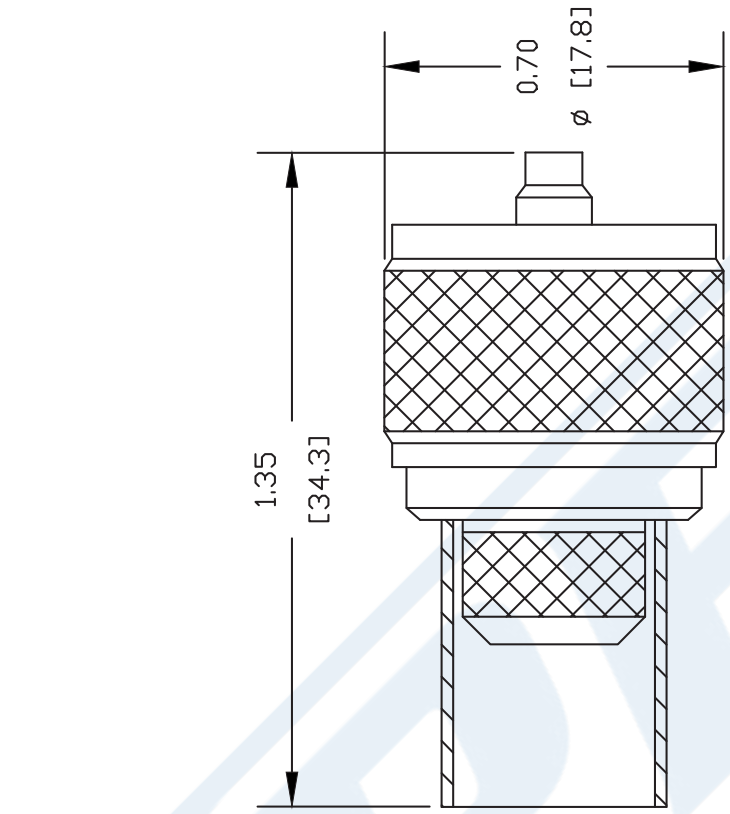

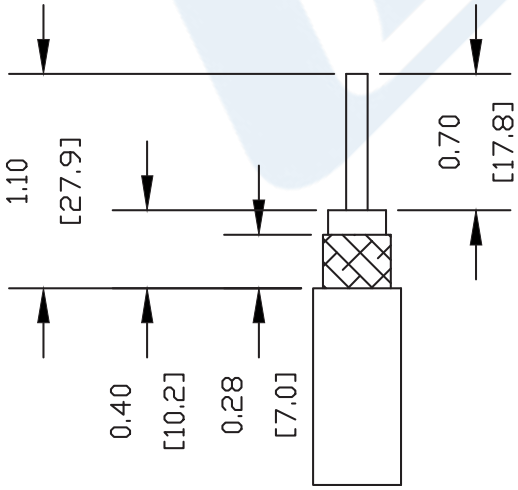

STRIPPING DIMENSIONS

CRIMP SIZE REQUIRED

CONTACT: SOLDER
FERRULE: .429" HEX CRIMP TOOL

NOTES:
1. UNLESS OTHERWISE SPECIFIED ALL DIMENSIONS ARE NOMINAL.
2. ALL SPECIFICATIONS ARE SUBJECT TO CHANGE WITHOUT NOTICE AT ANY TIME.
3. DIMENSIONS ARE IN INCHES [mm].
4. FITS MIL-C-17 AND EQUIVALENT CABLES.

DWG TITLE **PE44054**

REV. A | FSCM NO. 53919 | CAD FILE 050609 | SCALE N/A | SIZE A | 127

PASTERNACK®
Pasternack Enterprises, Inc.
P.O. Box 16759 | Irvine | CA | 92623
Phone: (949) 261-1920 | **Fax:** (949) 261-7451
Website: www.pasternack.com | **E-Mail:** sales@pasternack.com

© 2016 Pasternack Enterprises All Rights Reserved

PASTERNACK®
www.pasternack.com

Flexible RG8 Type with Foam Dielectric Coax Cable Double Shielded with Black PVC Jacket

TECHNICAL DATA SHEET PE-B400

Flexible RG8 Type with Foam Dielectric Coax Cable Double Shielded with Black PVC Jacket

Configuration

Inner Conductor Material and Plating	Copper
Dielectric Type	PE (F)
Shield Materials	Aluminum Tape, Tinned Copper Braid
Jacket Material and Color	PVC, Black

Electrical Specifications

Impedance, Ohms	50
Maximum Operating Frequency, GHz	4
Capacitance, pF/ft [pF/m]	26 [85.3]
Maximum Operating Voltage, Volts	600

Electrical Specifications by Frequency

Frequency 1

Frequency, MHz	10
Attenuation, dB/100ft [dB/100m]	0.5 [1.64]
Power Handling, KWatts	3

Frequency 2

Frequency, MHz	400
Attenuation, dB/100ft [dB/100m]	3.5 [11.48]
Power Handling, Watts	325

Frequency 3

Frequency, MHz	700
Attenuation, dB/100ft [dB/100m]	5 [16.4]
Power Handling, Watts	225

Frequency 4

Frequency, MHz	1000
Attenuation, dB/100ft [dB/100m]	6 [19.69]
Power Handling, Watts	190

Frequency 5

Frequency, GHz	4
Attenuation, dB/100ft [dB/100m]	13 [42.65]
Power Handling, Watts	65

Mechanical Specifications

Temperature

Operating Range, deg C	-40 to +80

Click the following link (or enter part number in “SEARCH” on website) to obtain additional part information including price, inventory and certifications: Flexible RG8 Type with Foam Dielectric Coax Cable Double Shielded with Black PVC Jacket PE-B400

The information contained in this document is accurate to the best of our knowledge and representative of the part described herein. It may be necessary to make modifications to the part and/or the documentation of the part, in order to implement improvements. Pasternack reserves the right to make such changes as required. Unless otherwise stated, all specifications are nominal.

Pasternack Enterprises, Inc. • P.O. Box 16759, Irvine, CA 92623
Phone: (866) 727-8376 or (949) 261-1920 • **Fax:** (949) 261-7451
Sales@Pasternack.com • Techsupport@Pasternack.com

© 2013 Pasternack Enterprises All Rights Reserved

PASTERNACK®
www.pasternack.com

Flexible RG8 Type with Foam Dielectric Coax Cable Double Shielded with Black PVC Jacket

TECHNICAL DATA SHEET PE-B400

Inner Conductor	
Number of Strands	1
Material	Copper
Diameter, in [mm]	0.103 [2.62]
Dielectric:	
Type	PE (F)
Diameter, in [mm]	0.285 [7.24]
Shield:	
Number of	2
Material 1	Aluminum Tape
Material 2	Tinned Copper Braid
Jacket:	
Material	PVC
Diameter, in [mm]	0.403 [10.24]
Color	Black
Weight, lbs/ft [Kg/m]	0.112 [0.17]

Compliance Certifications (visit www.Pasternack.com for current document)

Plotted and Other Data

Notes:	Values at 25 °C, sea level

Flexible RG8 Type with Foam Dielectric Coax Cable Double Shielded with Black PVC Jacket from Pasternack Enterprises has same day shipment for domestic and International orders. Our RF, microwave and fiber optic products maintain a 99% availability and are part of the broadest selection in the industry.

Click the following link (or enter part number in “SEARCH” on website) to obtain additional part information including price, inventory and certifications: Flexible RG8 Type with Foam Dielectric Coax Cable Double Shielded with Black PVC Jacket PE-B400

URL: http://www.pasternack.com/flexible-0.403-rg8-type-50-ohm-coax-cable-pvc-jacket-pe-b400-p.aspx

The information contained in this document is accurate to the best of our knowledge and representative of the part described herein. It may be necessary to make modifications to the part and/or the documentation of the part, in order to implement improvements. Pasternack reserves the right to make such changes as required. Unless otherwise stated, all specifications are nominal.

Pasternack Enterprises, Inc. • P.O. Box 16759, Irvine, CA 92623
Phone: (866) 727-8376 or (949) 261-1920 • **Fax:** (949) 261-7451
Sales@Pasternack.com • Techsupport@Pasternack.com

© 2013 Pasternack Enterprises All Rights Reserved

PE-B400 CAD Drawing

Flexible RG8 Type with Foam Dielectric Coax Cable
Double Shielded with Black PVC Jacket

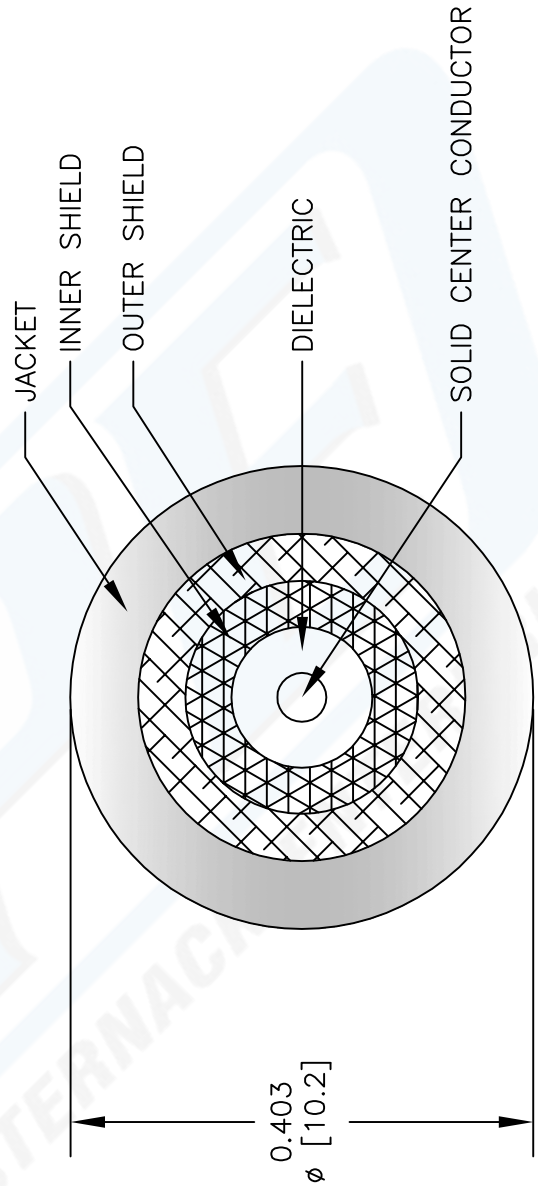

NOTES:
1. UNLESS OTHERWISE SPECIFIED ALL DIMENSIONS ARE NOMINAL.
2. ALL SPECIFICATIONS ARE SUBJECT TO CHANGE WITHOUT NOTICE AT ANY TIME.
3. DIMENSIONS ARE IN INCHES [mm].

DWG TITLE
PE-B400

CAD FILE 040113-A | SCALE N/A | SIZE A | 127

FSCM NO. 53919

PASTERNACK®
Pasternack Enterprises, Inc.
P.O. Box 16759 | Irvine | CA | 92623
Phone: (949) 261-1920 | **Fax:** (949) 261-7451
Website: www.pasternack.com | **E-Mail:** sales@pasternack.com

© 2013 Pasternack Enterprises All Rights Reserved