10-32 Male Right Angle Connector Crimp/Solder Attachment for RG174, RG316, RG188, PE-B100, PE-C100, 0.100 inch, LMR-100

RF Connectors Technical Data Sheet PE44355

Configuration

- 10-32 Male Connector
- MIL-C-39012
- 50 Ohms
- Right Angle Body Geometry
- RG174, RG316, RG188, PE-B100, PE-C100, 0.100 inch, LMR-100 Interface Type
- Crimp/Solder Attachment

Features

- Gold Plated Contact
- Contact plating according to MIL-G-45204

Applications

- General Purpose Test
- Custom Cable Assemblies

Description

Pasternack's PE44355 10-32 male right angle connector with crimp/solder attachment for RG174, RG316, RG188, PE-B100, PE-C100, 0.100 inch and LMR-100 is part of our full line of RF components available for same-day shipping. Its right angle body geometry allows for easier connections in tight spaces.

Our 10-32 male right angle connector PE44355 datasheet specifications and drawing with dimensions are shown below in this PDF. Pasternack's broad catalog of RF, microwave and millimeter wave connectors allows designers to configure and customize their signal connections however they like. Whether the need is to provide an I/O for a board design, or simply create a custom cable assembly configuration, Pasternack has the right connector for the job. Pasternack can also expertly build your custom cable assemblies for you and ship same-day.

Mechanical Specifications

Size	
Length	0.655 in [16.64 mm]
Width/Dia.	0.25 in [6.35 mm]
Height	0.53 in [13.46 mm]
Weight	0.009 lbs [4.08 g]

Click the following link (or enter part number in "SEARCH" on website) to obtain additional part information including price, inventory and certifications: 10-32 Male Right Angle Connector Crimp/Solder Attachment for RG174, RG316, RG188, PE-B100, PE-C100, 0.100 inch, LMR-100 PE44355

Pasternack Enterprises, Inc. • P.O. Box 16759, Irvine, CA 92623
Phone: (866) 727-8376 or (949) 261-1920 • **Fax:** (949) 261-7451
Sales@Pasternack.com • Techsupport@Pasternack.com

© 2016 Pasternack Enterprises All Rights Reserved

10-32 Male Right Angle Connector Crimp/Solder Attachment for RG174, RG316, RG188, PE-B100, PE-C100, 0.100 inch, LMR-100

Material Specifications

Description	Material	Plating
Contact		Gold MIL-G-45204
Insulation	PTFE	
Body	Brass	Nickel QQ-N-290
Coupling Nut	Brass	Nickel QQ-N-290

Compliance Certifications (see product page for current document)

Plotted and Other Data

Notes:

10-32 Male Right Angle Connector Crimp/Solder Attachment for RG174, RG316, RG188, PE-B100, PE-C100, 0.100 inch, LMR-100 from Pasternack Enterprises has same day shipment for domestic and International orders. Our RF, microwave and millimeter wave products maintain a 99% availability and are part of the broadest selection in the industry.

Click the following link (or enter part number in "SEARCH" on website) to obtain additional part information including price, inventory and certifications: 10-32 Male Right Angle Connector Crimp/Solder Attachment for RG174, RG316, RG188, PE-B100, PE-C100, 0.100 inch, LMR-100 PE44355

URL: https://www.pasternack.com/10-32-male-standard-rg174-rg316-rg188-connector-pe44355-p.aspx

The information contained in this document is accurate to the best of our knowledge and representative of the part described herein. It may be necessary to make modifications to the part and/or the documentation of the part, in order to implement improvements. Pasternack reserves the right to make such changes as required. Unless otherwise stated, all specifications are nominal. Pasternack does not make any representation or warranty regarding the suitability of the part described herein for any particular purpose, and Pasternack does not assume any liability arising out of the use of any part or documentation.

Pasternack Enterprises, Inc. • P.O. Box 16759, Irvine, CA 92623
Phone: (866) 727-8376 or (949) 261-1920 • **Fax:** (949) 261-7451
Sales@Pasternack.com • Techsupport@Pasternack.com

© 2016 Pasternack Enterprises All Rights Reserved

PE44355 CAD Drawing

10-32 Male Right Angle Connector Crimp/Solder Attachment for RG174, RG316, RG188, PE-B100, PE-C100, 0.100 inch, LMR-100

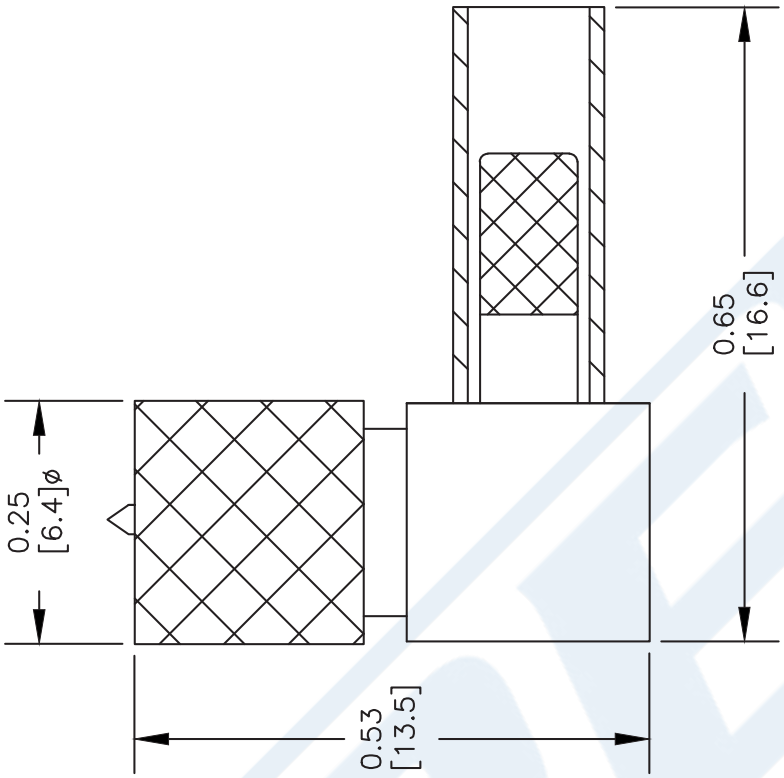

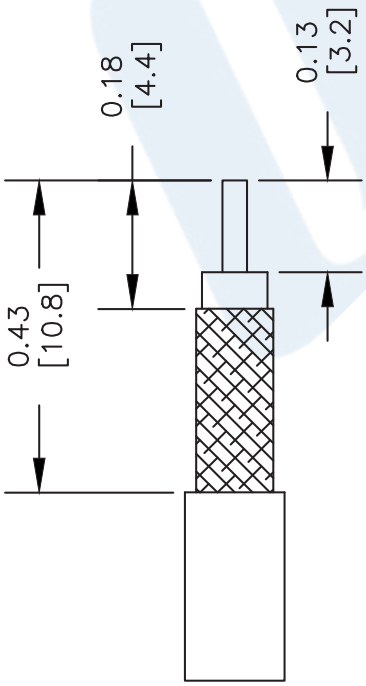

STRIPPING DIMENSIONS

ASSEMBLY PROCEDURES

1. STRIP CABLE AS SHOWN & SLIDE FERRULE OVER CABLE.
2. INSTALL CABLE INTO BODY OF CONNECTOR AND SOFT SOLDER CENTER CONDUCTOR IN PLACE.
3. CRIMP FERRULE & PRESS CAP DOWN.

CRIMP SIZE REQUIRED

FERRULE: .128" HEX CRIMP TOOL

NOTES:
1. UNLESS OTHERWISE SPECIFIED ALL DIMENSIONS ARE NOMINAL.
2. ALL SPECIFICATIONS ARE SUBJECT TO CHANGE WITHOUT NOTICE AT ANY TIME.
3. DIMENSIONS ARE IN INCHES [mm].
4. FITS MIL-C-17 AND EQUIVALENT CABLES.

DWG TITLE PE44355

FSCM NO. 53919

CAD FILE 090903 | SCALE N/A | SIZE A | XXXX

PASTERNACK®
Pasternack Enterprises, Inc.
P.O. Box 16759 | Irvine | CA | 92623
Phone: (949) 261-1920 | **Fax:** (949) 261-7451
Website: www.pasternack.com | **E-Mail:** sales@pasternack.com

© 2016 Pasternack Enterprises All Rights Reserved

SMB Plug Connector Crimp/Solder Attachment for RG174, RG316, RG188, LMR-100, PE-B100, PE-C100, 0.100 inch

RF Connectors Technical Data Sheet PE4046

Configuration

- SMB Plug Connector
- MIL-STD-348A
- 50 Ohms
- Straight Body Geometry
- RG174, RG316, RG188, LMR-100, PE-B100, PE-C100, 0.100 inch Interface Type
- Crimp/Solder Attachment

Features

- Max. Operating Frequency 3 GHz
- Good VSWR of 1.37:1
- Gold Plated Beryllium Copper Contact
- 30 µin minimum contact plating

Applications

- General Purpose Test
- Custom Cable Assemblies

Description

Pasternack's PE4046 SMB plug connector with crimp/solder attachment for RG174, RG316, RG188, LMR-100, PE-B100, PE-C100 and 0.100 inch is part of our full line of RF components available for same-day shipping. Our SMB plug connector operates up to a maximum frequency of 3 GHz and offers good VSWR of 1.37:1.

Our SMB plug connector PE4046 datasheet specifications and drawing with dimensions are shown below in this PDF. Pasternack's broad catalog of RF, microwave and millimeter wave connectors allows designers to configure and customize their signal connections however they like. Whether the need is to provide an I/O for a board design, or simply create a custom cable assembly configuration, Pasternack has the right connector for the job. Pasternack can also expertly build your custom cable assemblies for you and ship same-day.

Electrical Specifications

Description	Minimum	Typical	Maximum	Units
Frequency Range	DC		3	GHz
VSWR			1.37:1	
Operating Voltage (AC)			335	Vrms

Mechanical Specifications

Size

Length	0.85 in [21.59 mm]
Width/Dia.	0.256 in [6.50 mm]
Weight	0.012 lbs [5.44 g]

Click the following link (or enter part number in "SEARCH" on website) to obtain additional part information including price, inventory and certifications: SMB Plug Connector Crimp/Solder Attachment for RG174, RG316, RG188, LMR-100, PE-B100, PE-C100, 0.100 inch PE4046

Pasternack Enterprises, Inc. • P.O. Box 16759, Irvine, CA 92623
Phone: (866) 727-8376 or (949) 261-1920 • **Fax:** (949) 261-7451
Sales@Pasternack.com • Techsupport@Pasternack.com

© 2016 Pasternack Enterprises All Rights Reserved

SMB Plug Connector Crimp/Solder Attachment for RG174, RG316, RG188, LMR-100, PE-B100, PE-C100, 0.100 inch

Material Specifications

Description	Material	Plating
Contact	Beryllium Copper	Gold 30 µin minimum
Insulation	PTFE	
Body	Brass	Nickel 100 µin minimum
Coupling Nut	Brass	Nickel 100 µin minimum
Crimp Sleeve	Brass	Nickel

Environmental Specifications

Temperature

Operating Range -65 to +165 deg C

Compliance Certifications (see product page for current document)

Plotted and Other Data

Notes:

SMB Plug Connector Crimp/Solder Attachment for RG174, RG316, RG188, LMR-100, PE-B100, PE-C100, 0.100 inch from Pasternack Enterprises has same day shipment for domestic and International orders. Our RF, microwave and millimeter wave products maintain a 99% availability and are part of the broadest selection in the industry.

Click the following link (or enter part number in "SEARCH" on website) to obtain additional part information including price, inventory and certifications: SMB Plug Connector Crimp/Solder Attachment for RG174, RG316, RG188, LMR-100, PE-B100, PE-C100, 0.100 inch PE4046

URL: https://www.pasternack.com/smb-plug-standard-rg174-rg316-rg188-connector-pe4046-p.aspx

The information contained in this document is accurate to the best of our knowledge and representative of the part described herein. It may be necessary to make modifications to the part and/or the documentation of the part, in order to implement improvements. Pasternack reserves the right to make such changes as required. Unless otherwise stated, all specifications are nominal. Pasternack does not make any representation or warranty regarding the suitability of the part described herein for any particular purpose, and Pasternack does not assume any liability arising out of the use of any part or documentation.

Pasternack Enterprises, Inc. • P.O. Box 16759, Irvine, CA 92623
Phone: (866) 727-8376 or (949) 261-1920 • **Fax:** (949) 261-7451
Sales@Pasternack.com • Techsupport@Pasternack.com

© 2016 Pasternack Enterprises All Rights Reserved

PE4046 CAD Drawing

SMB Plug Connector Crimp/Solder Attachment for RG174, RG316, RG188, LMR-100, PE-B100, PE-C100, 0.100 inch

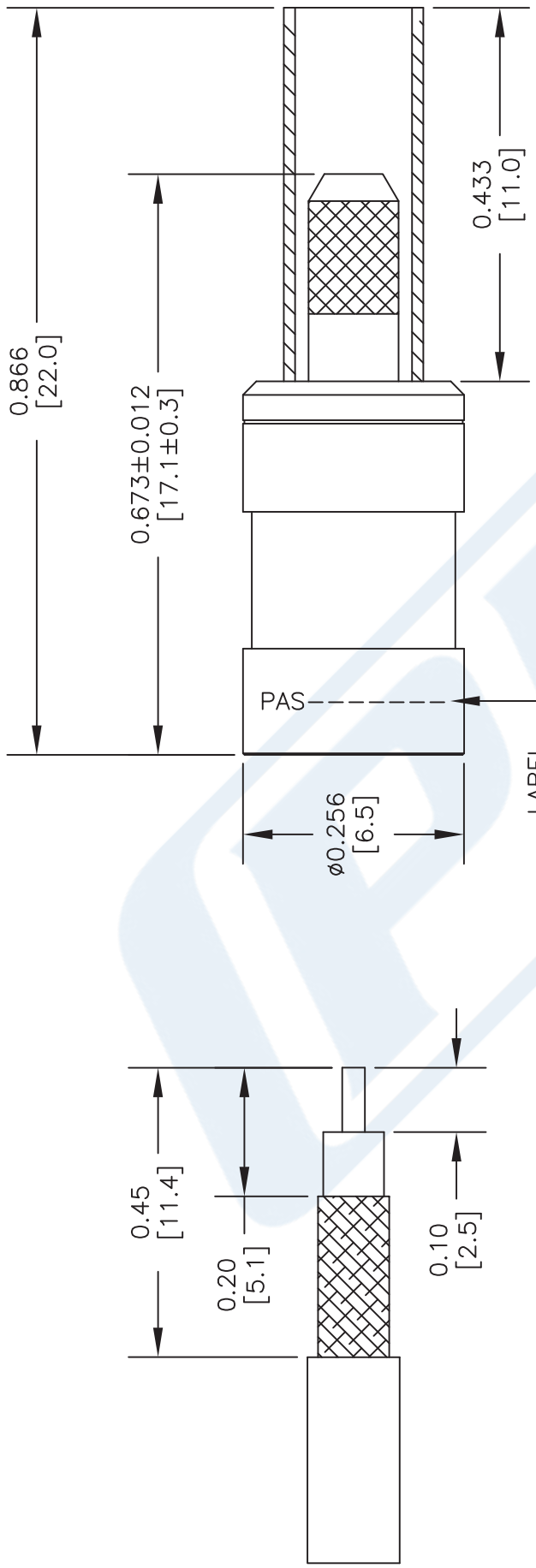

STRIPPING DIMENSIONS

CRIMP SIZE REQUIRED

CONTACT: SOLDER
FERRULE: .128" HEX CRIMP TOOL

STANDARD TOLERANCES	
.X	±0.2
.XX	±0.1
.XXX	±0.05

*STANDARD TOLERANCES APPLY ONLY TO DIMENSIONS IN INCHES

NOTES:
1. UNLESS OTHERWISE SPECIFIED ALL DIMENSIONS ARE NOMINAL.
2. ALL SPECIFICATIONS ARE SUBJECT TO CHANGE WITHOUT NOTICE AT ANY TIME.
3. DIMENSIONS ARE IN INCHES [mm].

DWG TITLE
PE4046

FSCM NO. 53919

CAD FILE 042516 | SCALE N/A | SIZE A | 3045

PASTERNACK®
THE ENGINEER'S RF SOURCE
Pasternack Enterprises, Inc.
P.O. Box 16759 | Irvine | CA | 92623
Phone: (949) 261-1920 | **Fax:** (949) 261-7451
Website: www.pasternack.com | **E-Mail:** sales@pasternack.com

© 2016 Pasternack Enterprises All Rights Reserved

TIMES MICROWAVE SYSTEMS

LMR®-100A
Flexible Low Loss Communications Coax

Ideal for...

- Drop-in Replacement for RG-316/RG-174 (uses standard connectors)
- Jumper Assemblies in Wireless Communications Systems
- Short Antenna Feeder runs
- Any application (e.g. WLL, GPS, LMR, WLAN, WISP, WiMax, SCADA, Mobile Antennas) requiring an easily routed, low loss RF cable

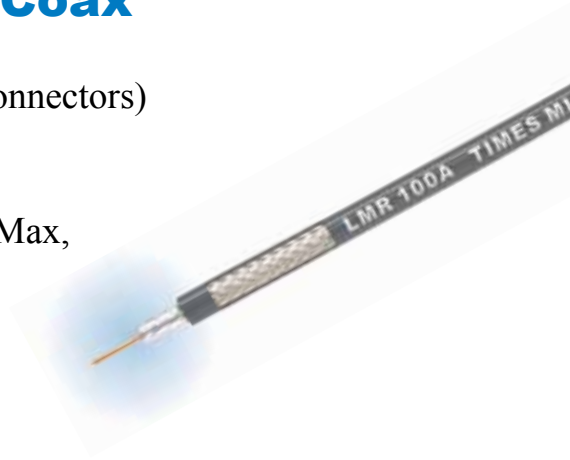

- **LMR®- PVC** is designed for low loss general-purpose indoor/outdoor applications and is somewhat more flexible than the standard polyethylene jacketed LMR.
- **LMR®- PVC-W** is a white-jacketed version of LMR-PVC for marine and other indoor/outdoor applications where color compatibility is desired.
- **Flexibility** and bendability are hallmarks of the LMR-100A cable design. The flexible outer conductor enables the tightest bend radius available for any cable of similar size and performance.
- **Low Loss** is another hallmark feature of LMR-100A. Size for size LMR has the lowest loss of any flexible cable and comparable loss to semirigid hard-line cables.
- **RF Shielding** is 50 dB greater than typical single shielded coax (40 dB). The multi-ply bonded foil outer conductor is rated conservatively at > 90 dB (i.e. >180 dB between two adjacent cables).
- **Weatherability**: LMR-100A cables designed for outdoor exposure incorporate the best materials for UV resistance and have life expectancy in excess of 20 years.
- **Connectors**: A wide variety of connectors are available for LMR-100A cable, including all common interface types, reverse polarity, and a choice of solder or non-solder center pins. Most LMR connectors employ crimp outer attachment using standard hex crimp sizes.
- **Cable Assemblies**: All LMR-100A cable types are available as pre-terminated cable assemblies. Refer to the section on FlexTech for further details.

Construction Specifications

Description	Material	In.	(mm)
Inner Conductor	Solid BCCS	0.018	(0.46)
Dielectric	Solid PE	0.060	(1.52)
Outer Conductor	Aluminum Tape	0.065	(1.65)
Overall Braid	Tinned Copper	0.083	(2.11)
Jacket	(see table above)	0.110	(2.79)

Mechanical Specifications

Performance Property	Units	US	(metric)
Bend Radius: installation	in. (mm)	0.25	(6.4)
Bend Radius: repeated	in. (mm)	1	(25.4)
Bending Moment	ft-lb (N-m)	0.1	(0.014)
Weight	lb/ft (kg/m)	0.0092	(.014)
Tensile Strength	lb (kg)	15	(6.8)
Flat Plate Crush	lb/in. (kg/mm)	10	(0.18)

Environmental Specifications

Performance Property	°F	°C
Installation Temperature Range	-40/+185	-40/+85
Storage Temperature Range	-94/+185	-70/+85
Operating Temperature Range	-40/+185	-40/+85

Electrical Specifications

Performance Property	Units	US	(metric)
Velocity of Propagation	%	66	
Dielectric Constant	NA	2.30	
Time Delay	nS/ft (nS/m)	1.54	(5.05)
Impedance	ohms	50	
Capacitance	pF/ft (pF/m)	30.8	(101.1)
Inductance	uH/ft (uH/m)	0.077	(0.25)
Shielding Effectiveness	dB	>90	
DC Resistance			
Inner Conductor	ohms/1000ft (/km)	81.0	(266)
Outer Conductor	ohms/1000ft (/km)	9.5	(31.2)
Voltage Withstand	Volts DC	500	
Jacket Spark	Volts RMS	2000	
Peak Power	kW	0.6	

Part Description

Part Number	Application	Jacket	Color	Stock Code
LMR-100A-FR	Indoor/Outdoor Riser CMR	FRPE	Black	54037
LMR-100A-PVC	Indoor/Outdoor	PVC	Black	54119
LMR-100A-PVC-W	Indoor/Outdoor	PVC	White	54200

PVC = Poly Vinyl Chloride; MTO = Made to Order

Attenuation vs. Frequency (typical)

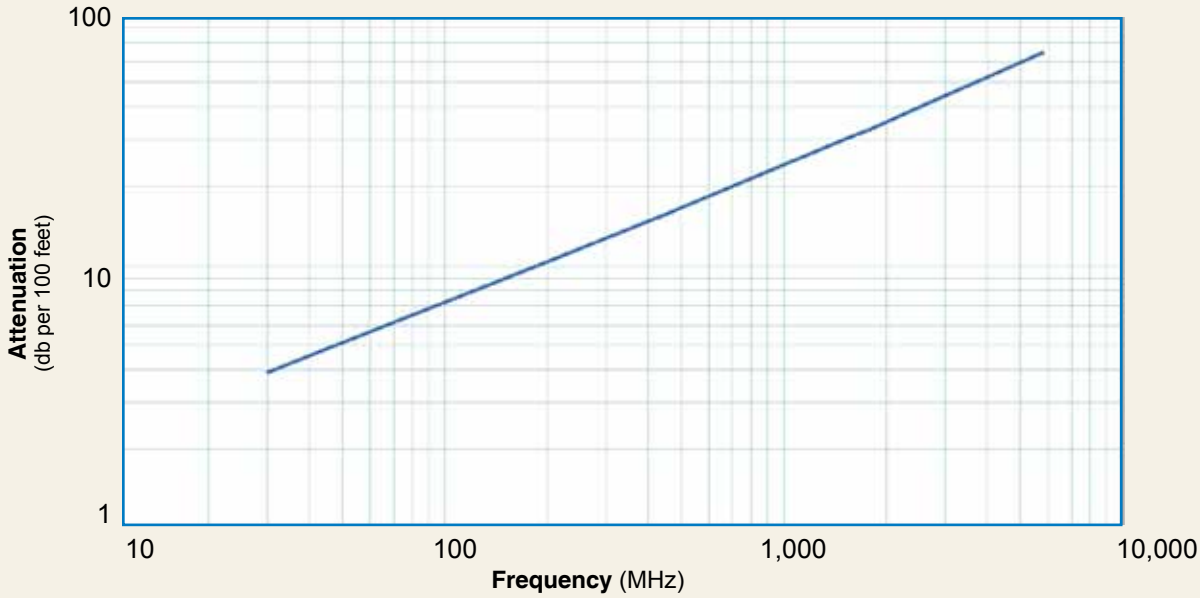

Frequency (MHz)	30	50	150	220	450	900	1500	1800	2000	2500	5800
Attenuation dB/100 ft	3.9	5.1	8.9	10.9	15.8	22.8	30.1	33.2	35.2	39.8	64.1
Attenuation dB/100 m	12.9	16.7	29.4	35.8	51.9	74.9	98.7	109.0	115.5	130.6	210.3
Avg. Power kW	0.230	0.180	0.100	0.083	0.057	0.039	0.029	0.027	0.025	0.022	0.013

Calculate Attenuation = (0.709140) • $\sqrt{\text{FMHz}}$ + (0.001740) • FMHz (interactive calculator available at http://www.timesmicrowave/telecom)
Attenuation: VSWR=1.0 ; Ambient = +25°C (77°F) **Power:** VSWR=1.0; Ambient = +40°C; Inner Conductor = 100°C (212°F);
Sea Level; dry air; atmospheric pressure; no solar loading

TC-100-SM

TC-100-TM

Connectors

Interface	Description	Part Number	Stock Code	VSWR ** Freq.	(GHz)	Coupling Nut	Inner Contact Attach	Outer Contact Attach	Finish* Body /Pin	Length in	(mm)	Width in	(mm)	Weight lb	(g)
SMA male	Straight Plug	TC-100-SM	3190-1551	<1.25:1	(<3)	Hex	Solder	Crimp	SS/G	1.0	(25.4)	0.32	(8.1)	0.015	(6.8)
TNC male	Straight Plug	TC-100-TM	3190-1552	<1.25:1	(<3)	Knurl	Solder	Crimp	S/G	1.4	(35.6)	0.59	(15.0)	0.045	(20.4)

* Finish metals: N=Nickel, S=Silver, G=Gold, SS=Stainless Steel, A=Alballoy **VSWR spec based on 3 foot cable with a connector pair

CT-240/200/195/100

Install Tools

Type	Part Number	Stock Code	Description
Crimp Tool	CT-240/200/195/100	3190-667	Crimp tool for LMR-100, 195, 200 and 240 connectors
Cutting Tool	CCT-01	3190-1544	Cable end flush cut tool
Replacement Blade	RB-01	3190-1609	Replacement blade for cutting tool

CCT-01