7/16 DIN Male Connector Crimp/Non-Solder Contact Attachment for PE-C400, PE-B400, PE-B405, LMR-400, LMR-400-DB, LMR-400-UF, 0.400 inch

RF Connectors Technical Data Sheet PE44538

Configuration

- 7/16 DIN Male Connector
- 50 Ohms
- Straight Body Geometry
- PE-C400, PE-B400, PE-B405, LMR-400, LMR-400-DB, LMR-400-UF, 0.400 inch Interface Type
- Crimp/Non-Solder Contact Attachment
- 1 1/4 inch Hex

Features

- Max. Operating Frequency 7.5 GHz
- Silver Plated Brass Contact

Applications

- General Purpose Test
- Custom Cable Assemblies

Description

Pasternack's PE44538 7/16 DIN male connector with crimp/non-solder contact attachment for PE-C400, PE-B400, PE-B405, LMR-400, LMR-400-DB, LMR-400-UF and 0.400 inch is part of our full line of RF components available for same-day shipping. Our 7/16 DIN male connector operates up to a maximum frequency of 7.5 GHz.

Our 7/16 DIN male connector PE44538 datasheet specifications and drawing with dimensions are shown below in this PDF. Pasternack's broad catalog of RF, microwave and millimeter wave connectors allows designers to configure and customize their signal connections however they like. Whether the need is to provide an I/O for a board design, or simply create a custom cable assembly configuration, Pasternack has the right connector for the job. Pasternack can also expertly build your custom cable assemblies for you and ship same-day.

Electrical Specifications

Description	Minimum	Typical	Maximum	Units
Frequency Range	DC		7.5	GHz

Mechanical Specifications

Size

Length	1.89 in [48.01 mm]
Width/Dia.	1.25 in [31.75 mm]
Weight	0.225 lbs [102.06 g]

Click the following link (or enter part number in "SEARCH" on website) to obtain additional part information including price, inventory and certifications: 7/16 DIN Male Connector Crimp/Non-Solder Contact Attachment for PE-C400, PE-B400, PE-B405, LMR-400, LMR-400-DB, LMR-400-UF, 0.400 inch PE44538

Pasternack Enterprises, Inc. • P.O. Box 16759, Irvine, CA 92623
Phone: (866) 727-8376 or (949) 261-1920 • **Fax:** (949) 261-7451
Sales@Pasternack.com • Techsupport@Pasternack.com

© 2016 Pasternack Enterprises All Rights Reserved

7/16 DIN Male Connector Crimp/Non-Solder Contact Attachment for PE-C400, PE-B400, PE-B405, LMR-400, LMR-400-DB, LMR-400-UF, 0.400 inch

Material Specifications

Description	Material	Plating
Contact	Brass	Silver
Insulation	PTFE	
Body	Brass	Tri-Metal
Coupling Nut	Brass	Tri-Metal

Environmental Specifications

Temperature

Operating Range -65 to +165 deg C

Compliance Certifications (see product page for current document)

Plotted and Other Data

Notes:

7/16 DIN Male Connector Crimp/Non-Solder Contact Attachment for PE-C400, PE-B400, PE-B405, LMR-400, LMR-400-DB, LMR-400-UF, 0.400 inch from Pasternack Enterprises has same day shipment for domestic and International orders. Our RF, microwave and millimeter wave products maintain a 99% availability and are part of the broadest selection in the industry.

Click the following link (or enter part number in "SEARCH" on website) to obtain additional part information including price, inventory and certifications: 7/16 DIN Male Connector Crimp/Non-Solder Contact Attachment for PE-C400, PE-B400, PE-B405, LMR-400, LMR-400-DB, LMR-400-UF, 0.400 inch PE44538

URL: https://www.pasternack.com/7-16-male-standard-pe-c400-0.400-connector-pe44538-p.aspx

The information contained in this document is accurate to the best of our knowledge and representative of the part described herein. It may be necessary to make modifications to the part and/or the documentation of the part, in order to implement improvements. Pasternack reserves the right to make such changes as required. Unless otherwise stated, all specifications are nominal. Pasternack does not make any representation or warranty regarding the suitability of the part described herein for any particular purpose, and Pasternack does not assume any liability arising out of the use of any part or documentation.

Pasternack Enterprises, Inc. • P.O. Box 16759, Irvine, CA 92623
Phone: (866) 727-8376 or (949) 261-1920 • **Fax:** (949) 261-7451
Sales@Pasternack.com • Techsupport@Pasternack.com

© 2016 Pasternack Enterprises All Rights Reserved

PE44538 CAD Drawing

7/16 DIN Male Connector Crimp/Non-Solder Contact Attachment for PE-C400, PE-B400, PE-B405, LMR-400, LMR-400-DB, LMR-400-UF, 0.400 inch

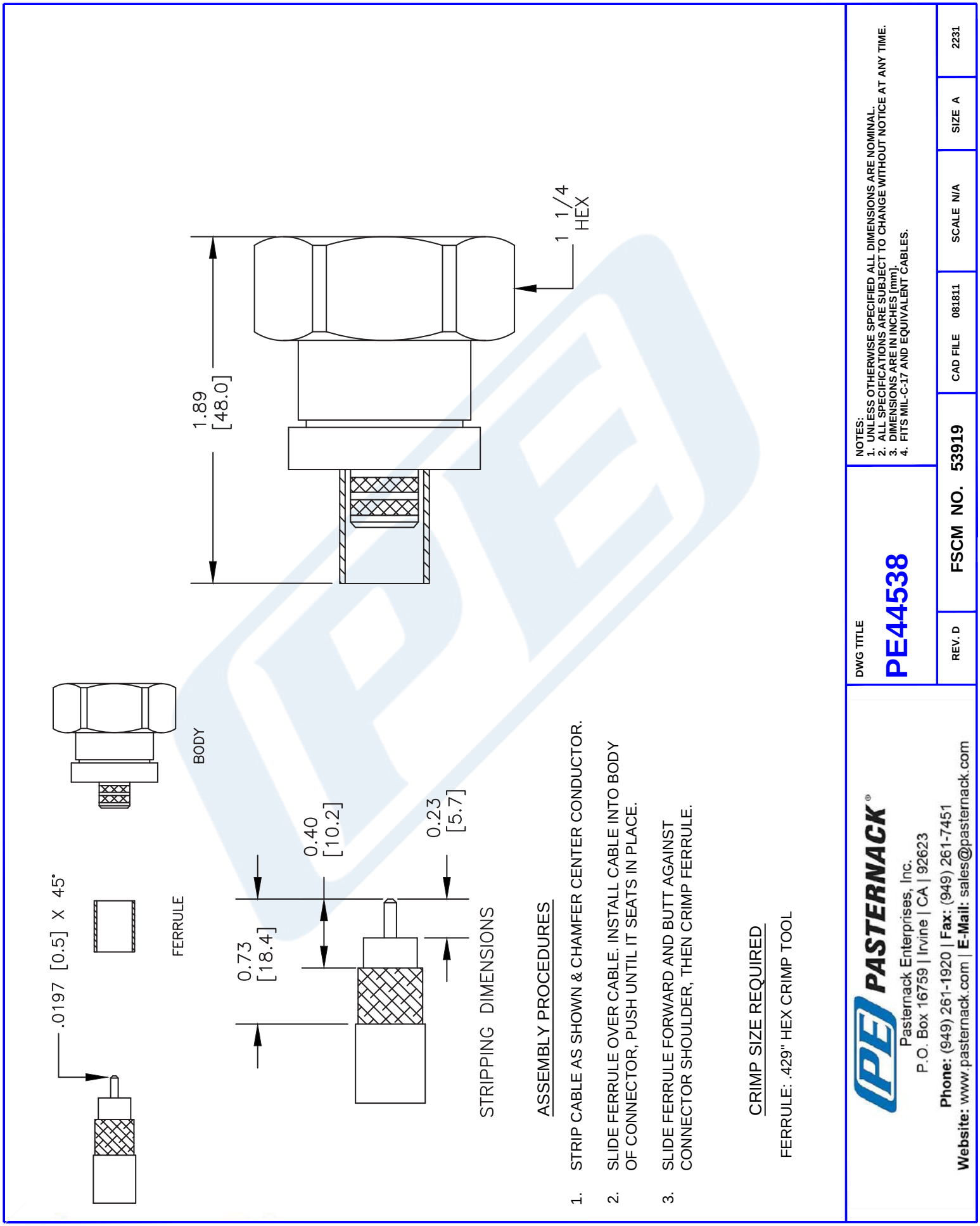

© 2016 Pasternack Enterprises All Rights Reserved

UHF Male Connector Crimp/Solder Attachment for PE-B400, PE-B405, PE-C400, LMR-400, 0.400 inch

RF Connectors Technical Data Sheet PE44054

Configuration

- UHF Male Connector
- 50 Ohms
- Straight Body Geometry
- PE-B400, PE-B405, PE-C400, LMR-400, 0.400 inch Interface Type
- Crimp/Solder Attachment

Features

- Gold Plated Contact

Applications

- General Purpose Test
- Custom Cable Assemblies

Description

Pasternack's PE44054 UHF male connector with crimp/solder attachment for PE-B400, PE-B405, PE-C400, LMR-400 and 0.400 inch is part of our full line of RF components available for same-day shipping.

Our UHF male connector PE44054 datasheet specifications and drawing with dimensions are shown below in this PDF. Pasternack's broad catalog of RF, microwave and millimeter wave connectors allows designers to configure and customize their signal connections however they like. Whether the need is to provide an I/O for a board design, or simply create a custom cable assembly configuration, Pasternack has the right connector for the job. Pasternack can also expertly build your custom cable assemblies for you and ship same-day.

Mechanical Specifications

Size

Length	1.35 in [34.29 mm]
Width/Dia.	0.7 in [17.78 mm]
Weight	0.041 lbs [18.6 g]

Material Specifications

Description	Material	Plating
Contact		Gold
Insulation	PTFE	
Body	Brass	Nickel
Coupling Nut	Brass	Nickel

Click the following link (or enter part number in "SEARCH" on website) to obtain additional part information including price, inventory and certifications: UHF Male Connector Crimp/Solder Attachment for PE-B400, PE-B405, PE-C400, LMR-400, 0.400 inch PE44054

Pasternack Enterprises, Inc. • P.O. Box 16759, Irvine, CA 92623
Phone: (866) 727-8376 or (949) 261-1920 • **Fax:** (949) 261-7451
Sales@Pasternack.com • Techsupport@Pasternack.com

© 2016 Pasternack Enterprises All Rights Reserved

UHF Male Connector Crimp/Solder Attachment for PE-B400, PE-B405, PE-C400, LMR-400, 0.400 inch

Compliance Certifications (see product page for current document)

Plotted and Other Data

Notes:

UHF Male Connector Crimp/Solder Attachment for PE-B400, PE-B405, PE-C400, LMR-400, 0.400 inch from Pasternack Enterprises has same day shipment for domestic and International orders. Our RF, microwave and millimeter wave products maintain a 99% availability and are part of the broadest selection in the industry.

Click the following link (or enter part number in "SEARCH" on website) to obtain additional part information including price, inventory and certifications: UHF Male Connector Crimp/Solder Attachment for PE-B400, PE-B405, PE-C400, LMR-400, 0.400 inch PE44054

URL: https://www.pasternack.com/uhf-male-pe-b400-pe-b405-lmr-400-uf-connector-pe44054-p.aspx

The information contained in this document is accurate to the best of our knowledge and representative of the part described herein. It may be necessary to make modifications to the part and/or the documentation of the part, in order to implement improvements. Pasternack reserves the right to make such changes as required. Unless otherwise stated, all specifications are nominal. Pasternack does not make any representation or warranty regarding the suitability of the part described herein for any particular purpose, and Pasternack does not assume any liability arising out of the use of any part or documentation.

Pasternack Enterprises, Inc. • P.O. Box 16759, Irvine, CA 92623
Phone: (866) 727-8376 or (949) 261-1920 • **Fax:** (949) 261-7451
Sales@Pasternack.com • Techsupport@Pasternack.com

© 2016 Pasternack Enterprises All Rights Reserved

PE44054 CAD Drawing

UHF Male Connector Crimp/Solder Attachment for PE-B400, PE-B405, PE-C400, LMR-400, 0.400 inch

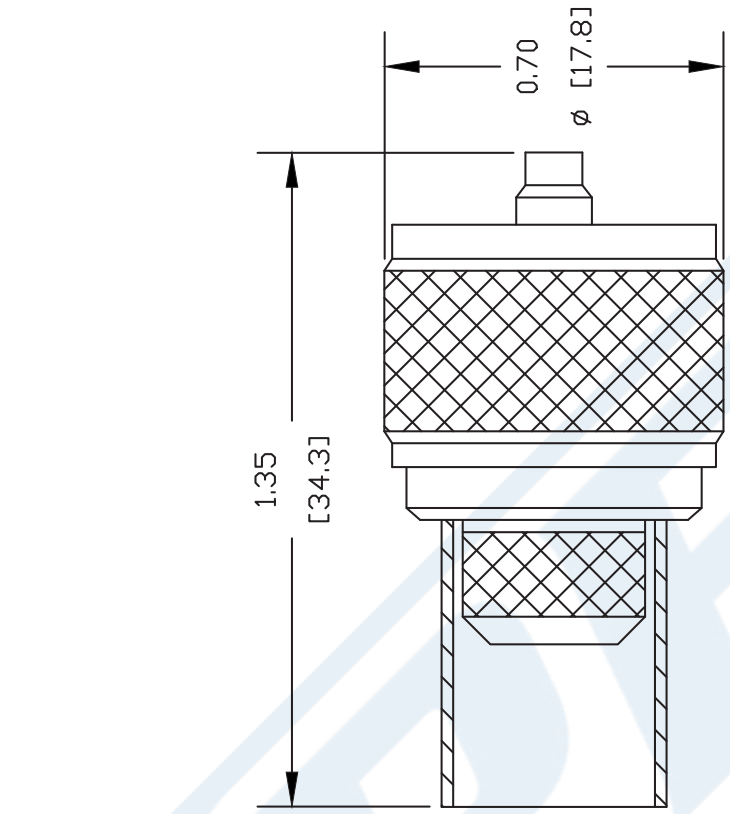

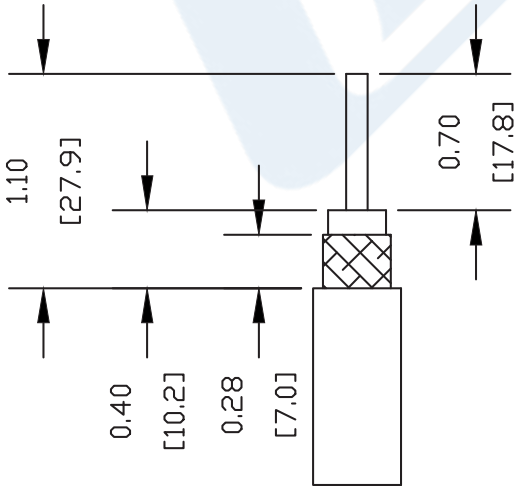

STRIPPING DIMENSIONS

CRIMP SIZE REQUIRED

CONTACT: SOLDER
FERRULE: .429" HEX CRIMP TOOL

NOTES:
1. UNLESS OTHERWISE SPECIFIED ALL DIMENSIONS ARE NOMINAL.
2. ALL SPECIFICATIONS ARE SUBJECT TO CHANGE WITHOUT NOTICE AT ANY TIME.
3. DIMENSIONS ARE IN INCHES [mm].
4. FITS MIL-C-17 AND EQUIVALENT CABLES.

DWG TITLE **PE44054**

REV. A | FSCM NO. 53919 | CAD FILE 050609 | SCALE N/A | SIZE A | 127

PASTERNACK®
Pasternack Enterprises, Inc.
P.O. Box 16759 | Irvine | CA | 92623
Phone: (949) 261-1920 | **Fax:** (949) 261-7451
Website: www.pasternack.com | **E-Mail:** sales@pasternack.com

© 2016 Pasternack Enterprises All Rights Reserved

TIMES MICROWAVE SYSTEMS

LMR®-400
Flexible Low Loss Communications Coax

Ideal for...

- Drop-in replacement for RG-8/9913 Air-Dielectric type Cable
- Jumper Assemblies in Wireless Communications Systems
- Short Antenna Feeder runs
- Any application (e.g. WLL, GPS, LMR, WLAN, WISP, WiMax, SCADA, Mobile Antennas) requiring an easily routed, low loss RF cable

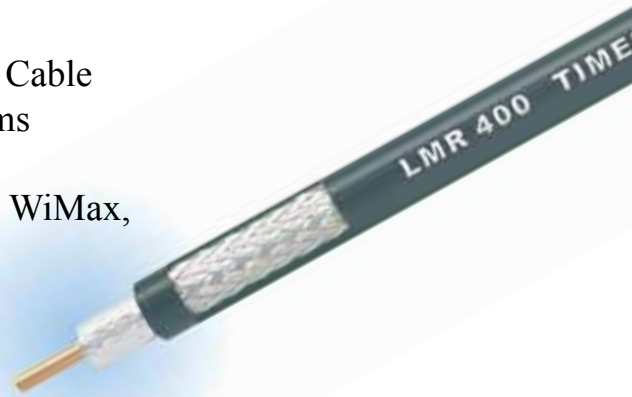

• **LMR®** standard is a UV Resistant Polyethylene jacketed cable designed for 20-year service outdoor use. The bending and handling characteristics are significantly better than air-dielectric and corrugated hard-line cables.

• **LMR®- DB** is identical to standard LMR plus has the advantage of being watertight. The addition of waterproofing compound in and around the foil/braid insures continuous reliable service should the jacket be inadvertently damaged during installation or in the future.

• **LMR®- FR** is a non-halogen (non-toxic), low smoke, fire retardant cable designed for in-building runs that can be routed anywhere except air handling plenums. LMR-FR is UL/NEC & CSA rated 'CMR' and 'FT4' respectively, meets FAA FAR25 requirements and is MSHA-P for mining applications.

• **LMR®- FR-PVC** is a general-purpose indoor cable and has a UL/NEC & CSA rating of 'CMR' and 'FT4' respectively. It is less expensive than LMR-FR, however it emits toxic fumes (HCL) and greater smoke density when burned.

• **LMR®- PVC** is designed for low loss general-purpose applications and is somewhat more flexible than the standard polyethylene jacketed LMR.

• **LMR®- PVC-W** is a white-jacketed version of LMR-PVC for marine and other applications where color compatibility is desired.

• **Flexibility** and bendability are hallmarks of the LMR-400 cable design. The flexible outer conductor enables the tightest bend radius available for any cable of similar size and performance.

• **Low Loss** is another hallmark feature of LMR-400. Size for size LMR has the lowest loss of any flexible cable and comparable loss to semirigid hard-line cables.

• **RF Shielding** is 50 dB greater than typical single shielded coax (40 dB). The multi-ply bonded foil outer conductor is rated conservatively at > 90 dB (i.e. >180 dB between two adjacent cables).

• **Weatherability**: LMR-400 cables designed for outdoor exposure incorporate the best materials for UV resistance and have life expectancy in excess of 20 years.

• **Connectors**: A wide variety of connectors are available for LMR-400 cable, including all common interface types, reverse polarity, and a choice of solder or non-solder center pins. Most LMR connectors employ crimp outer attachment using standard hex crimp sizes.

• **Cable Assemblies**: All LMR-400 cable types are available as pre-terminated cable assemblies. Refer to the section on FlexTech for further details.

Part Description

Part Number	Application	Jacket	Color	Stock Code
LMR-400	Outdoor	PE	Black	54001
LMR-400-DB	Outdoor/Watertight	PE	Black	54091
LMR-400-FR	Indoor/Outdoor Riser CMR	FRPE	Black	54030
LMR-400-FR-PVC	Indoor/Outdoor Riser CMR	FRPVC	Black	54073
LMR-400-PVC	General Purpose	PVC	Black	54218
LMR-400-PVC-W	General Purpose	PVC	White	54204

Construction Specifications

Description	Material	In.	(mm)
Inner Conductor	Solid BCCAI	0.108	(2.74)
Dielectric	Foam PE	0.285	(7.24)
Outer Conductor	Aluminum Tape	0.291	(7.39)
Overall Braid	Tinned Copper	0.320	(8.13)
Jacket	(see table above)	0.405	(10.29)

TIMES MICROWAVE SYSTEMS

LMR®-400
Flexible Low Loss Communications Coax

SC-400-NM

TC-400-NMC

EZ-400-NMH-X

TC-400-NMH-X

EZ-400-NMK

TC-400-NMH-RA-D

TC-400-NMC-RA (A)

TC-400-NFC

TC-400-NM-RP

EZ-400-NMC-2

EZ-400-NMH-RA-X

Connectors

Interface	Description	Part Number	Stock Code	VSWR** Freq. (GHz)	Coupling Nut	Inner Contact Attach	Outer Contact Attach	Finish* Body /Pin	Length in (mm)	Width in (mm)	Weight lb(g)
7-16 DIN Female	Straight Jack	TC-400-716-FC	3190-376	<1.25:1 (2.5)	NA	Solder	Clamp	S/S	1.6 (41)	1.13 (28.7)	0.281 (127.5)
7-16 DIN Male	Straight Plug	EZ-400-716M-X	3190-2524	<1.25:1 (6)	Hex	Spring Finger	Crimp	A/G	1.6 (39.5)	1.38 (35)	0.277 (126.0)
7-16 DIN Male	Straight Plug	TC-400-716-MC	3190-279	<1.25:1 (2.5)	Hex	Solder	Clamp	S/S	1.4 (36)	1.40 (35.6)	0.268 (121.6)
7-16 DIN Male	Right Angle	TC-400-716MC-RA	3190-1671	<1.25:1 (<3)	Hex	Solder	Clamp	A/S	2.4 (61.5)	1.88 (47.8)	0.35 (159)
7-16DIN Male	Right Angle	EZ-400-716M-RA-X	3190-2545	<1.35:1 (6)	Hex	Spring Finger	Crimp	A/G	1.6 (41.7)	1.75 (44.3)	0.374 (0.17)
BNC Male	Straight Plug	TC-400-BM	3190-318	<1.25:1 (2.5)	Knurl	Solder	Crimp	N/S	1.7 (43)	0.56 (14.2)	0.063 (28.6)
HN Male	Straight Plug	TC-400-HNM	3190-923	<1.25: (<1)	Knurl	Solder	Clamp	S/G	2.3 (59.2)	0.88 (22.4)	0.25 (113.4)
HN Male	Right Angle	TC-400-HNM-RA	3190-2541	<1.25:1 (2.5)	Hex	Solder	Crimp	A/G	1.6 (41.4)	1.56 (39.6)	0.198 (90.0)
QDS Male	Straight Plug	TC-400-QDSM	3190-620	<1.25: (<3)	Knurl	Solder	Clamp	A/G	1.8 (46.6)	1.00 (25.4)	0.25 (113.4)
Mini-UHF	Straight Plug	TC-400-MUHF	3190-520	<1.25:1 (2.5)	Knurl	Solder	Crimp	N/G	1.1 (28)	0.50 (12.7)	0.020 (9.1)
N Female	Straight Jack	TC-400-NFC	3190-299	<1.25:1 (2.5)	NA	Solder	Clamp	N/S	1.6 (41)	0.75 (19.1)	0.119 (54.0)
	Straight Jack	EZ-400-NF	3190-956	<1.25:1 (2.5)	NA	Spring Finger	Crimp	N/G	1.8 (45)	0.66 (16.8)	0.105 (47.6)
	Straight Jack	TC-400-NF	3190-2255	<1.25:1 (2.5)	NA	Solder	Crimp	N/G	1.8 (45)	0.66 (16.8)	0.105 (47.6)
	Bulkhead Jack	EZ-400-NF-BH	3190-518#	<1.25:1 (2.5)	NA	Spring Finger	Crimp	N/G	1.8 (46)	0.88 (22.4)	0.102 (46.3)
	Bulkhead Jack	TC-400-NFC-BH (A)	3190-872	<1.25:1 (2.5)	NA	Solder	Clamp	A/G	1.8 (46)	0.88 (22.4)	0.145 (65.8)
N Male	Straight Plug	SC-400-NM	3190-1454	<1.25:1 (2.5)	Knurl	Solder	Crimp	N/G	1.5 (38)	0.75 (19.1)	0.090 (40.8)
	Straight Plug	TC-400-NMC	3190-277	<1.25:1 (2.5)	Knurl	Solder	Clamp	N/G	1.5 (38)	0.70 (17.8)	0.121 (54.9)
	Straight Plug	EZ-400-NMC-2	3190-2640	<1.25:1 (2.5)	Hex/Knurl	Spring Finger	Crimp	N/G	1.5 (38)	0.75 (19.1)	0.121 (54.9)
	Straight Plug	EZ-400-NMH-X	3190-2590	<1.25:1 (10)	Hex/Knurl	Spring Finger	Crimp	A/G	1.5 (38)	0.89 (22.6)	0.103 (46.8)
	Straight Plug	TC-400-NMH-X	3190-2626	<1.25:1 (10)	Hex/Knurl	Solder	Crimp	A/G	1.5 (38)	0.89 (22.6)	0.113 (51.3)
	Straight Plug	EZ-400-NMK	3190-661	<1.25:1 (10)	Knurl	Spring Finger	Crimp	S/G	1.5 (38)	0.75 (22.6)	0.113 (51.3)
	Right Angle	EZ-400-NMH-RA-X	3190-2638	<1.35:1 (6)	Hex/Knurl	Spring Finger	Crimp	A/G	1.87 (47)	1.42 (36.0)	0.177 (80.2)
	Right Angle	TC-400-NMH-RA-D	3190-2293#	<1.35:1 (6)	Hex/Knurl	Solder	Crimp	A/G	1.8 (46)	1.25 (31.8)	0.130 (59.0)
	Right Angle	TC-400-NMC-RA (A)	3190-870	<1.35:1 (2.5)	Hex	Solder	Clamp	A/G	1.8 (46)	1.25 (31.8)	0.150 (68.0)
	Reverse Polarity	TC-400-NM-RP	3190-960	<1.25:1 (2.5)	Knurl	Solder	Crimp	N/G	1.5 (38)	0.75 (19.1)	0.090 (40.8)
SMA Male	Straight Plug	TC-400-SM	3190-439	<1.25:1 (8)	Hex	Solder	Crimp	N/G	1.2 (29)	0.50 (12.7)	0.032 (14.5)
TNC Female	Reverse Polarity	TC-400-TF-RP	3190-1063	<1.25:1 (2.5)	NA	Solder	Crimp	N/G	1.8 (46)	0.55 (14.0)	0.074 (33.6)
	Reverse Polarity	EZ-400-TF-RP	3190-795	<1.25:1 (2.5)	NA	Spring Finger	Crimp	A/G	1.8 (46)	0.55 (14.0)	0.074 (33.6)
TNC Male	Straight Plug	TC-400-TM-X	3190-2532	<1.25:1 (6)	Hex/Knurl	Solder	Crimp	A/G	1.9 (48)	0.67 (17.5)	0.075 (34.3)
	Straight Plug	EZ-400-TM-X	3190-2533	<1.25:1 (6)	Hex/Knurl	Spring Finger	Crimp	A/G	1.9 (48)	0.67 (17.5)	0.075 (34.3)
	Right Angle	TC-400-TM-RA	3190-442#	<1.35:1 (2.5)	Knurl	Solder	Crimp	N/G	1.7 (43)	0.59 (15.0)	0.085 (38.6)
	Reverse Polarity	TC-400-TM-RP	3190-1062	<1.25:1 (2.5)	Knurl	Solder	Crimp	N/G	1.7 (43)	0.59 (15.0)	0.074 (33.6)
	Reverse Polarity	EZ-400-TM-RP	3190-794	<1.25:1 (2.5)	Knurl	Spring Finger	Crimp	A/G	1.7 (43)	0.59 (15.0)	0.074 (33.6)

* Finish metals: N=Nickel, S=Silver, G=Gold, SS=Stainless Steel, A=Alballoy **VSWR spec based on 3 foot cable with a connector *Available in bulk pack