PASTERNACK
an INFINITE brand

# SMB Plug Right Angle Connector Crimp/Solder Attachment for RG55, RG142, RG223, RG400

RF Connectors
Technical Data Sheet

PE4595

## Configuration

- SMB Plug Connector
- 50 Ohms
- Right Angle Body Geometry
- RG55, RG142, RG223, RG400 Interface Type
- Crimp/Solder Attachment

## Features

- Gold Plated Beryllium Copper Contact
- 30µ in. minimum contact plating

## Applications

- General Purpose Test
- Custom Cable Assemblies

### Description

Pasternack's PE4595 SMB plug right angle connector with crimp/solder attachment for RG55, RG142, RG223 and RG400 is part of our full line of RF components available for same-day shipping. Its right angle body geometry allows for easier connections in tight spaces.

Our SMB plug right angle connector PE4595 datasheet specifications and drawing with dimensions are shown below in this PDF. Pasternack's broad catalog of RF, microwave and millimeter wave connectors allows designers to configure and customize their signal connections however they like. Whether the need is to provide an I/O for a board design, or simply create a custom cable assembly configuration, Pasternack has the right connector for the job. Pasternack can also expertly build your custom cable assemblies for you and ship same-day.

### Mechanical Specifications

**Size**

| | |
|---|---|
| Length | 0.755 in [19.18 mm] |
| Width/Dia. | 0.25 in [6.35 mm] |
| Height | 0.51 in [12.95 mm] |
| Weight | 0.006 lbs [2.72 g] |

**Material Specifications**

| Description | Material | Plating |
|---|---|---|
| Contact | Beryllium Copper | Gold<br>30µ in. minimum |
| Insulation | Teflon | |
| Body | Brass | Nickel<br>100µ in. minimum |
| Coupling Nut | Brass | Nickel<br>100µ in. minimum |

Click the following link (or enter part number in "SEARCH" on website) to obtain additional part information including price, inventory and certifications: SMB Plug Right Angle Connector Crimp/Solder Attachment for RG55, RG142, RG223, RG400 PE4595

Pasternack Enterprises, Inc. • P.O. Box 16759, Irvine, CA 92623
**Phone:** (866) 727-8376 or (949) 261-1920 • **Fax:** (949) 261-7451
Sales@Pasternack.com • Techsupport@Pasternack.com

© 2019 Pasternack Enterprises All Rights Reserved

# SMB Plug Right Angle Connector Crimp/Solder Attachment for RG55, RG142, RG223, RG400



## Environmental Specifications

**Temperature**

| | |
|---|---|
| Operating Range | -65 to +165 deg C |

## Compliance Certifications (see product page for current document)

## Plotted and Other Data

Notes:

SMB Plug Right Angle Connector Crimp/Solder Attachment for RG55, RG142, RG223, RG400 from Pasternack Enterprises has same day shipment for domestic and International orders. Our RF, microwave and millimeter wave products maintain a 99.4% availability and are part of the broadest selection in the industry.

Click the following link (or enter part number in “SEARCH” on website) to obtain additional part information including price, inventory and certifications: SMB Plug Right Angle Connector Crimp/Solder Attachment for RG55, RG142, RG223, RG400 PE4595

URL: https://www.pasternack.com/smb-plug-standard-rg55-rg142-rg223-rg400-connector-pe4595-p.aspx

The information contained in this document is accurate to the best of our knowledge and representative of the part described herein. It may be necessary to make modifications to the part and/or the documentation of the part, in order to implement improvements. Pasternack reserves the right to make such changes as required. Unless otherwise stated, all specifications are nominal. Pasternack does not make any representation or warranty regarding the suitability of the part described herein for any particular purpose, and Pasternack does not assume any liability arising out of the use of any part or documentation.

Pasternack Enterprises, Inc. • P.O. Box 16759, Irvine, CA 92623
**Phone:** (866) 727-8376 or (949) 261-1920 • **Fax:** (949) 261-7451
Sales@Pasternack.com • Techsupport@Pasternack.com

© 2019 Pasternack Enterprises All Rights Reserved

# PE4595 CAD Drawing

SMB Plug Right Angle Connector Crimp/Solder Attachment
for RG55, RG142, RG223, RG400

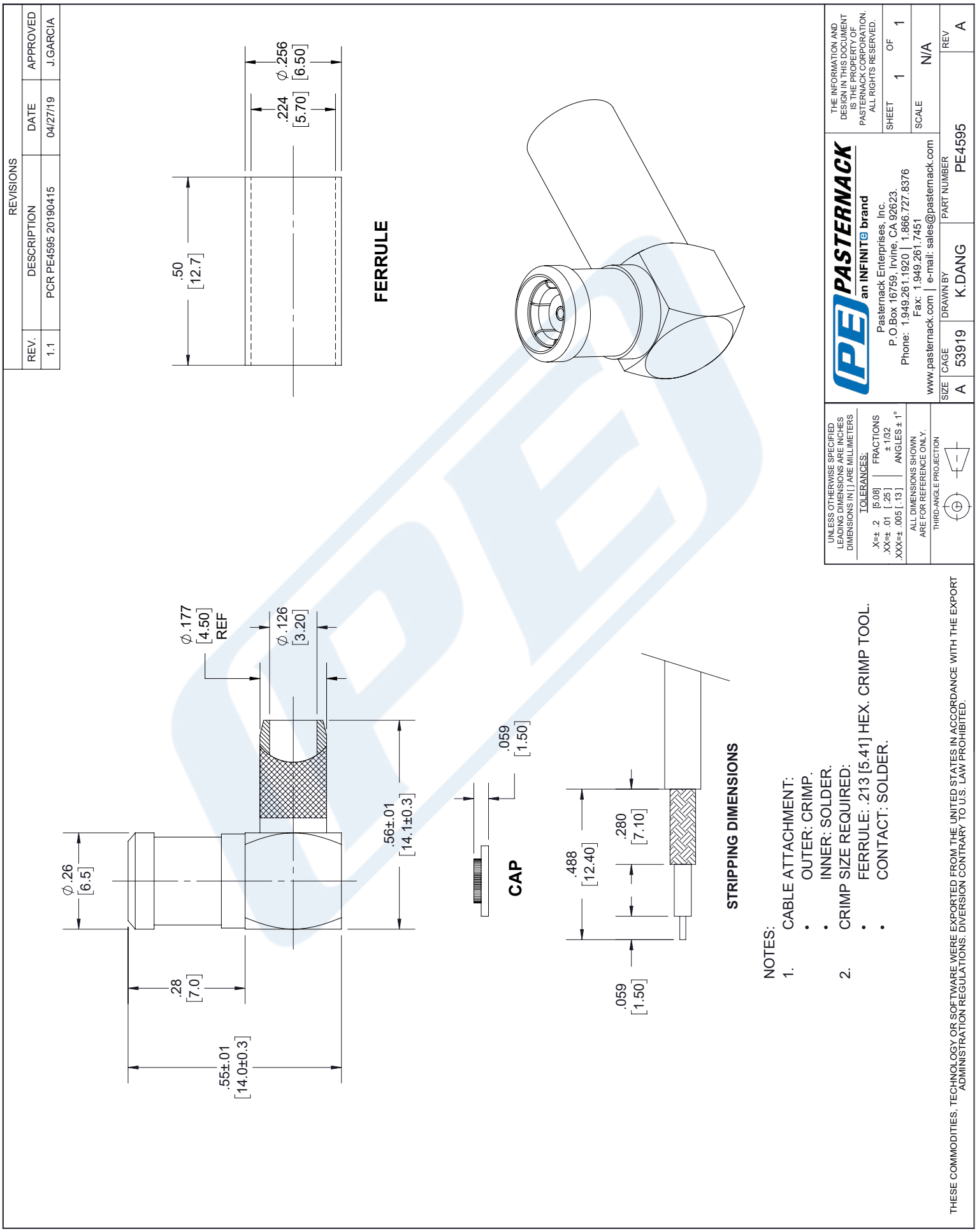

| MATERIALS | |
|---|---|
| BODY | BRASS NICKEL PLATED |
| CONTACT | GOLD PLATED |
| INSULATOR | ABS |
| 2 CONDUCTORS | BRASS NICKEL PLATED |

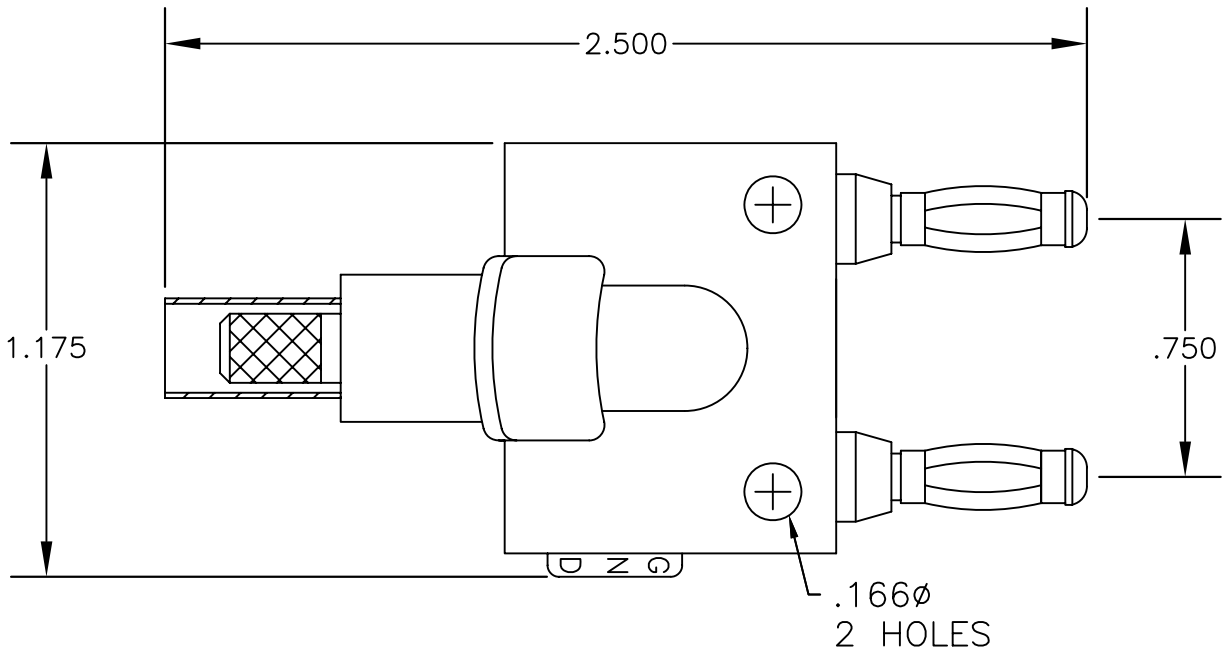


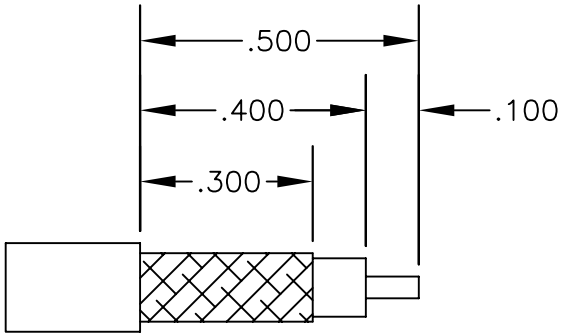


STRIPPING DIMENSIONS

CRIMP SIZES REQUIRED

CONTACT: .068" HEX CRIMP TOOL

FERRULE: .213" HEX CRIMP TOOL


PASTERNACK ENTERPRISES®
ESTABLISHED 1972

PASTERNACK ENTERPRISES, INC.
P.O BOX 16759, IRVINE, CA 92623
PHONE (949) 261-1920 FAX (949) 261-7451

WEB ADDRESS: www.pasternack.com
E-MAIL ADDRESS: sales@pasternack.com


COAXIAL & FIBER OPTICS

| DWG TITLE | DES. |
|---|---|
| PE4089 | DOUBLE BANANA PLUG CRIMP ATTACHMENT FOR RG55, RG142, RG223 & RG400 |

| SIZE A | FSCM NO. 53919 | CAD FILE 010305 | SCALE N/A | | 127 |
|---|---|---|---|---|---|

NOTES:
1. UNLESS OTHERWISE SPECIFIED ALL DIMENSIONS ARE NOMINAL.
2. ALL SPECIFICATIONS ARE SUBJECT TO CHANGE WITHOUT NOTICE AT ANY TIME.

PASTERNACK®
www.pasternack.com

# Flexible RG142 Coax Cable Double Shielded with Tan FEP Jacket

## TECHNICAL DATA SHEET RG142B/U

Flexible RG142 Coax Cable Double Shielded with Tan FEP Jacket

### Configuration

| | |
|---|---|
| Inner Conductor Material and Plating | Copper Clad Steel, Silver |
| Dielectric Type | PTFE |
| Shield Materials | Silver Plated Copper Braid, Silver Plated Copper Braid |
| Jacket Material and Color | FEP, Tan |

### Electrical Specifications

| | |
|---|---|
| Impedance, Ohms | 50 |
| Velocity of Propagation, % | 69.2 |
| Maximum Operating Frequency, GHz | 8 |
| RF Shielding, dB | 90 |
| Capacitance, pF/ft [pF/m] | 29.4 [96.46] |
| Maximum Operating Voltage, Volts | 1,900 |

**Electrical Specifications by Frequency**

**Frequency 1**

| | |
|---|---|
| Frequency, MHz | 100 |
| Attenuation, dB/100ft [dB/100m] | 3.9 [12.8] |

**Frequency 2**

| | |
|---|---|
| Frequency, MHz | 1000 |
| Attenuation, dB/100ft [dB/100m] | 13 [42.65] |

**Frequency 3**

| | |
|---|---|
| Frequency, GHz | 3 |
| Attenuation, dB/100ft [dB/100m] | 23.8 [78.08] |

**Frequency 4**

| | |
|---|---|
| Frequency, GHz | 5 |
| Attenuation, dB/100ft [dB/100m] | 36 [118.11] |

### Mechanical Specifications

**Temperature**

| | |
|---|---|
| Operating Range, deg C | -55 to +200 |

**Inner Conductor**

| | |
|---|---|
| Number of Strands | 1 |
| Material | Copper Clad Steel |
| Plating | Silver |
| Diameter, in [mm] | 0.037 [0.94] |

Click the following link (or enter part number in “SEARCH” on website) to obtain additional part information including price, inventory and certifications: Flexible RG142 Coax Cable Double Shielded with Tan FEP Jacket RG142B/U

The information contained in this document is accurate to the best of our knowledge and representative of the part described herein. It may be necessary to make modifications to the part and/or the documentation of the part, in order to implement improvements. Pasternack reserves the right to make such changes as required. Unless otherwise stated, all specifications are nominal.

Pasternack Enterprises, Inc. • P.O. Box 16759, Irvine, CA 92623
**Phone:** (866) 727-8376 or (949) 261-1920 • **Fax:** (949) 261-7451
Sales@Pasternack.com • Techsupport@Pasternack.com

© 2013 Pasternack Enterprises All Rights Reserved

# Flexible RG142 Coax Cable Double Shielded with Tan FEP Jacket

## TECHNICAL DATA SHEET RG142B/U

**Dielectric:**

| | |
|---|---|
| Type | PTFE |
| Diameter, in [mm] | 0.116 [2.95] |

**Shield:**

| | |
|---|---|
| Number of | 2 |
| Material 1 | Silver Plated Copper Braid |
| Material 2 | Silver Plated Copper Braid |
| Diameter, in [mm] | 0.156 [3.96] |

**Jacket:**

| | |
|---|---|
| Material | FEP |
| Diameter, in [mm] | 0.195 [4.95] |
| Color | Tan |
| One Time Minimum Bend Radius, in [mm] | 0.984 [24.99] |
| Repeated Minimum Bend Radius, in [mm] | 2 [50.8] |
| Weight, lbs/ft [Kg/m] | 0.046 [0.07] |

**Compliance Certifications** (visit www.Pasternack.com for current document)

| | |
|---|---|
| RoHS Compliant | Yes |

**Plotted and Other Data**

| | |
|---|---|
| Notes: | Values at 25 °C, sea level |

URL: http://www.pasternack.com/flexible-0.195-rg142-50-ohm-coax-cable-fep-jacket-rg142b-u-p.aspx

Flexible RG142 Coax Cable Double Shielded with Tan FEP Jacket from Pasternack Enterprises has same day shipment for domestic and International orders. Our RF, microwave and fiber optic products maintain a 99% availability and are part of the broadest selection in the industry.

The information contained in this document is accurate to the best of our knowledge and representative of the part described herein. It may be necessary to make modifications to the part and/or the documentation of the part, in order to implement improvements. Pasternack reserves the right to make such changes as required. Unless otherwise stated, all specifications are nominal.

Pasternack Enterprises, Inc. • P.O. Box 16759, Irvine, CA 92623
**Phone:** (866) 727-8376 or (949) 261-1920 • **Fax:** (949) 261-7451
Sales@Pasternack.com • Techsupport@Pasternack.com

© 2013 Pasternack Enterprises All Rights Reserved

# RG142B/U CAD Drawing

Flexible RG142 Coax Cable Double Shielded with Tan FEP Jacket

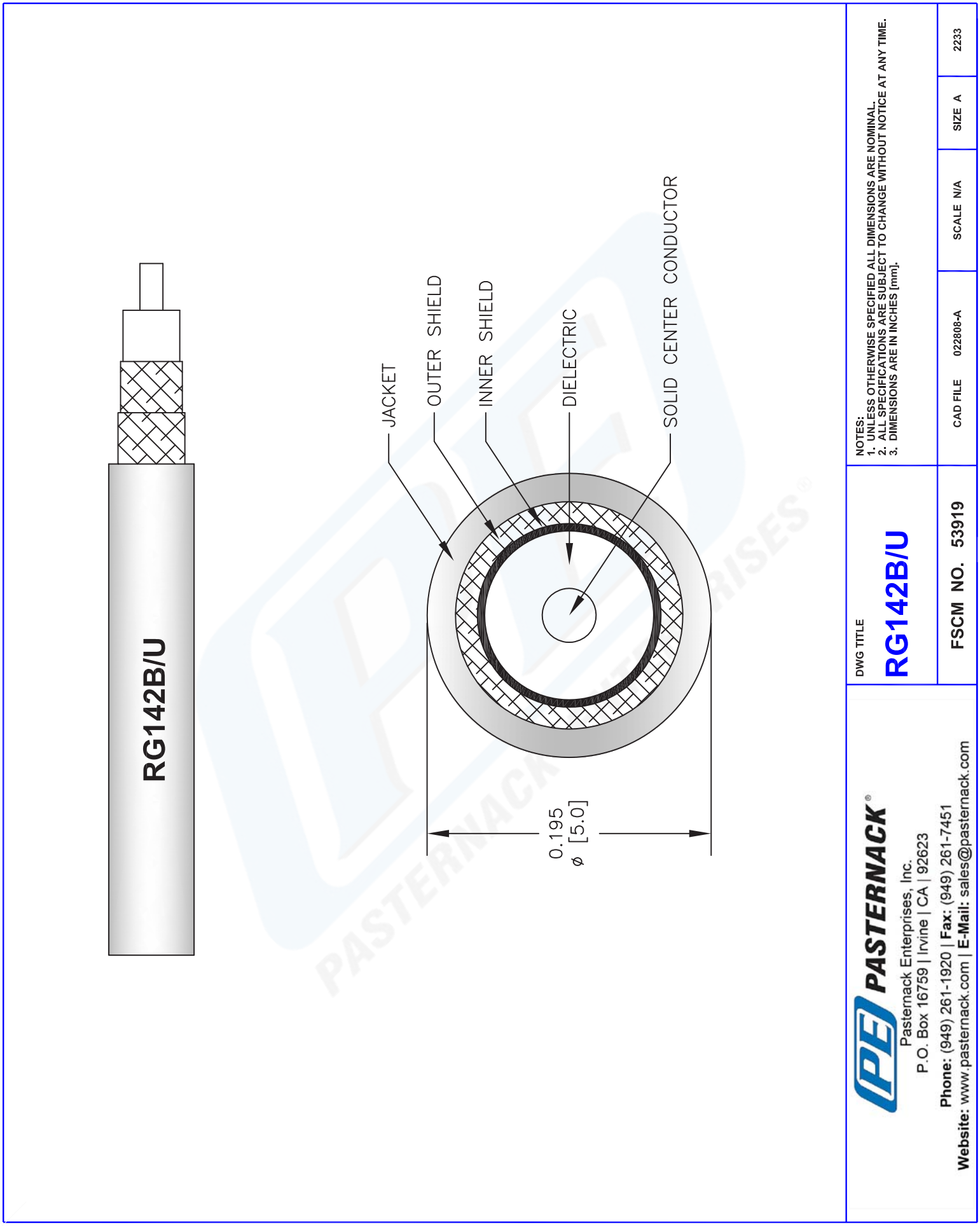


© 2012 Pasternack Enterprises All Rights Reserved