PASTERNACK®
THE ENGINEER'S RF SOURCE

SMA Female Connector Solder Attachment for PE-SR402AL, PE-SR402FL, PE-SR402FLJ, PE-SR402TN, RG402

RF Connectors Technical Data Sheet PE4115

Configuration

- SMA Female Connector
- 50 Ohms
- Straight Body Geometry
- PE-SR402AL, PE-SR402FL, PE-SR402FLJ, PE-SR402TN, RG402 Interface Type
- Solder/Solder Attachment

Features

- Max. Operating Frequency 18 GHz
- Gold Plated Beryllium Copper Contact

Applications

- General Purpose Test
- Custom Cable Assemblies

Description

Pasternack's PE4115 SMA female connector with solder/solder attachment for PE-SR402AL, PE-SR402FL, PE-SR402FLJ, PE-SR402TN and RG402 is part of our full line of RF components available for same-day shipping. Our SMA female connector operates up to a maximum frequency of 18 GHz.

Our SMA female connector PE4115 datasheet specifications and drawing with dimensions are shown below in this PDF. Pasternack's broad catalog of RF, microwave and millimeter wave connectors allows designers to configure and customize their signal connections however they like. Whether the need is to provide an I/O for a board design, or simply create a custom cable assembly configuration, Pasternack has the right connector for the job. Pasternack can also expertly build your custom cable assemblies for you and ship same-day.

Electrical Specifications

Description	Minimum	Typical	Maximum	Units
Frequency Range	DC		18	GHz

Mechanical Specifications

Size	
Length	0.5 in [12.7 mm]
Width/Dia.	0.25 in [6.35 mm]
Weight	0.004 lbs [1.81 g]

Click the following link (or enter part number in "SEARCH" on website) to obtain additional part information including price, inventory and certifications: SMA Female Connector Solder Attachment for PE-SR402AL, PE-SR402FL, PE-SR402FLJ, PE-SR402TN, RG402 PE4115

Pasternack Enterprises, Inc. • P.O. Box 16759, Irvine, CA 92623
Phone: (866) 727-8376 or (949) 261-1920 • **Fax:** (949) 261-7451
Sales@Pasternack.com • Techsupport@Pasternack.com

© 2016 Pasternack Enterprises All Rights Reserved

SMA Female Connector Solder Attachment for PE-SR402AL, PE-SR402FL, PE-SR402FLJ, PE-SR402TN, RG402

Material Specifications

Description	Material	Plating
Contact	Beryllium Copper	Gold
Insulation	PTFE	
Body	Stainless Steel	Gold

Compliance Certifications (see product page for current document)

Plotted and Other Data

Notes:

SMA Female Connector Solder Attachment for PE-SR402AL, PE-SR402FL, PE-SR402FLJ, PE-SR402TN, RG402 from Pasternack Enterprises has same day shipment for domestic and International orders. Our RF, microwave and millimeter wave products maintain a 99% availability and are part of the broadest selection in the industry.

Click the following link (or enter part number in "SEARCH" on website) to obtain additional part information including price, inventory and certifications: SMA Female Connector Solder Attachment for PE-SR402AL, PE-SR402FL, PE-SR402FLJ, PE-SR402TN, RG402 PE4115

URL: https://www.pasternack.com/sma-female-standard-pe-sr402al-pe-sr402fl-rg402-connector-pe4115-p.aspx

The information contained in this document is accurate to the best of our knowledge and representative of the part described herein. It may be necessary to make modifications to the part and/or the documentation of the part, in order to implement improvements. Pasternack reserves the right to make such changes as required. Unless otherwise stated, all specifications are nominal. Pasternack does not make any representation or warranty regarding the suitability of the part described herein for any particular purpose, and Pasternack does not assume any liability arising out of the use of any part or documentation.

Pasternack Enterprises, Inc. • P.O. Box 16759, Irvine, CA 92623
Phone: (866) 727-8376 or (949) 261-1920 • **Fax:** (949) 261-7451
Sales@Pasternack.com • Techsupport@Pasternack.com

© 2016 Pasternack Enterprises All Rights Reserved

PE4115 CAD Drawing

SMA Female Connector Solder Attachment for PE-SR402AL, PE-SR402FL, PE-SR402FLJ, PE-SR402TN, RG402

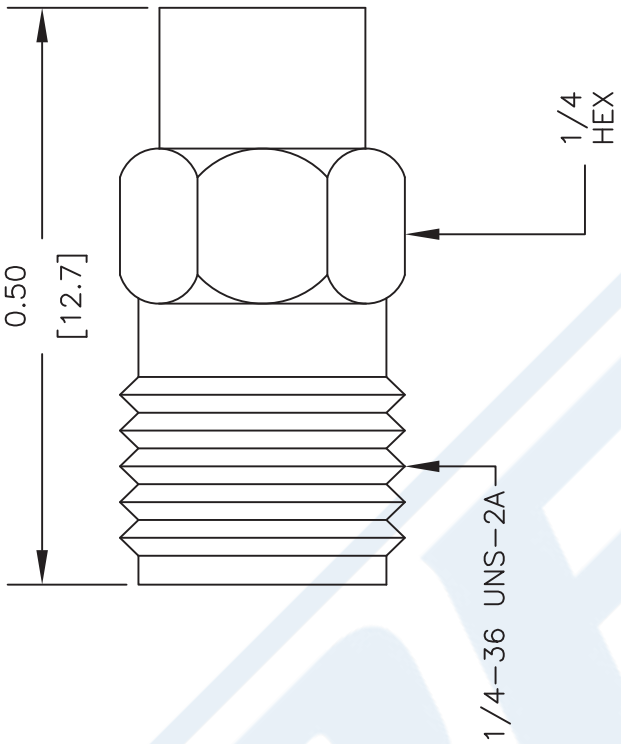

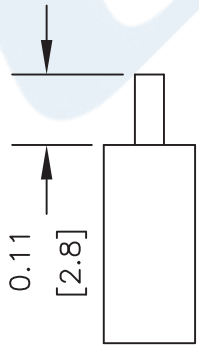

STRIPPING DIMENSIONS

ASSEMBLY PROCEDURES

1. STRIP CABLE AS SHOWN. DO NOT NICK CENTER CONDUCTOR.
2. SOLDER CONTACT TO CENTER CONDUCTOR.
3. INSERT CABLE INTO BODY UNTIL OUTER CONDUCTOR IS FLUSH WITH BODY SHOULDER. SOLDER OUTER CONDUCTOR TO BODY.

NOTES:
1. UNLESS OTHERWISE SPECIFIED ALL DIMENSIONS ARE NOMINAL.
2. ALL SPECIFICATIONS ARE SUBJECT TO CHANGE WITHOUT NOTICE AT ANY TIME.
3. DIMENSIONS ARE IN INCHES [mm].
4. FITS MIL-C-17 AND EQUIVALENT CABLES.

DWG TITLE
PE4115

REV. A	FSCM NO. 53919	CAD FILE 110811	SCALE N/A	SIZE A	2233

PASTERNACK®
Pasternack Enterprises, Inc.
P.O. Box 16759 | Irvine | CA | 92623
Phone: (949) 261-1920 | **Fax:** (949) 261-7451
Website: www.pasternack.com | **E-Mail:** sales@pasternack.com

© 2016 Pasternack Enterprises All Rights Reserved

PASTERNACK®
THE ENGINEER'S RF SOURCE

SMA Female Connector Solder Attachment for PE-SR402AL, PE-SR402FL, PE-SR402FLJ, PE-SR402TN, RG402

RF Connectors Technical Data Sheet PE4115

Configuration

- SMA Female Connector
- 50 Ohms
- Straight Body Geometry
- PE-SR402AL, PE-SR402FL, PE-SR402FLJ, PE-SR402TN, RG402 Interface Type
- Solder/Solder Attachment

Features

- Max. Operating Frequency 18 GHz
- Gold Plated Beryllium Copper Contact

Applications

- General Purpose Test
- Custom Cable Assemblies

Description

Pasternack's PE4115 SMA female connector with solder/solder attachment for PE-SR402AL, PE-SR402FL, PE-SR402FLJ, PE-SR402TN and RG402 is part of our full line of RF components available for same-day shipping. Our SMA female connector operates up to a maximum frequency of 18 GHz.

Our SMA female connector PE4115 datasheet specifications and drawing with dimensions are shown below in this PDF. Pasternack's broad catalog of RF, microwave and millimeter wave connectors allows designers to configure and customize their signal connections however they like. Whether the need is to provide an I/O for a board design, or simply create a custom cable assembly configuration, Pasternack has the right connector for the job. Pasternack can also expertly build your custom cable assemblies for you and ship same-day.

Electrical Specifications

Description	Minimum	Typical	Maximum	Units
Frequency Range	DC		18	GHz

Mechanical Specifications

Size	
Length	0.5 in [12.7 mm]
Width/Dia.	0.25 in [6.35 mm]
Weight	0.004 lbs [1.81 g]

Click the following link (or enter part number in "SEARCH" on website) to obtain additional part information including price, inventory and certifications: SMA Female Connector Solder Attachment for PE-SR402AL, PE-SR402FL, PE-SR402FLJ, PE-SR402TN, RG402 PE4115

Pasternack Enterprises, Inc. • P.O. Box 16759, Irvine, CA 92623
Phone: (866) 727-8376 or (949) 261-1920 • **Fax:** (949) 261-7451
Sales@Pasternack.com • Techsupport@Pasternack.com

© 2016 Pasternack Enterprises All Rights Reserved

SMA Female Connector Solder Attachment for PE-SR402AL, PE-SR402FL, PE-SR402FLJ, PE-SR402TN, RG402

Material Specifications

Description	Material	Plating
Contact	Beryllium Copper	Gold
Insulation	PTFE	
Body	Stainless Steel	Gold

Compliance Certifications (see product page for current document)

Plotted and Other Data

Notes:

SMA Female Connector Solder Attachment for PE-SR402AL, PE-SR402FL, PE-SR402FLJ, PE-SR402TN, RG402 from Pasternack Enterprises has same day shipment for domestic and International orders. Our RF, microwave and millimeter wave products maintain a 99% availability and are part of the broadest selection in the industry.

Click the following link (or enter part number in "SEARCH" on website) to obtain additional part information including price, inventory and certifications: SMA Female Connector Solder Attachment for PE-SR402AL, PE-SR402FL, PE-SR402FLJ, PE-SR402TN, RG402 PE4115

URL: https://www.pasternack.com/sma-female-standard-pe-sr402al-pe-sr402fl-rg402-connector-pe4115-p.aspx

The information contained in this document is accurate to the best of our knowledge and representative of the part described herein. It may be necessary to make modifications to the part and/or the documentation of the part, in order to implement improvements. Pasternack reserves the right to make such changes as required. Unless otherwise stated, all specifications are nominal. Pasternack does not make any representation or warranty regarding the suitability of the part described herein for any particular purpose, and Pasternack does not assume any liability arising out of the use of any part or documentation.

Pasternack Enterprises, Inc. • P.O. Box 16759, Irvine, CA 92623
Phone: (866) 727-8376 or (949) 261-1920 • **Fax:** (949) 261-7451
Sales@Pasternack.com • Techsupport@Pasternack.com

© 2016 Pasternack Enterprises All Rights Reserved

PE4115 CAD Drawing

SMA Female Connector Solder Attachment for PE-SR402AL, PE-SR402FL, PE-SR402FLJ, PE-SR402TN, RG402

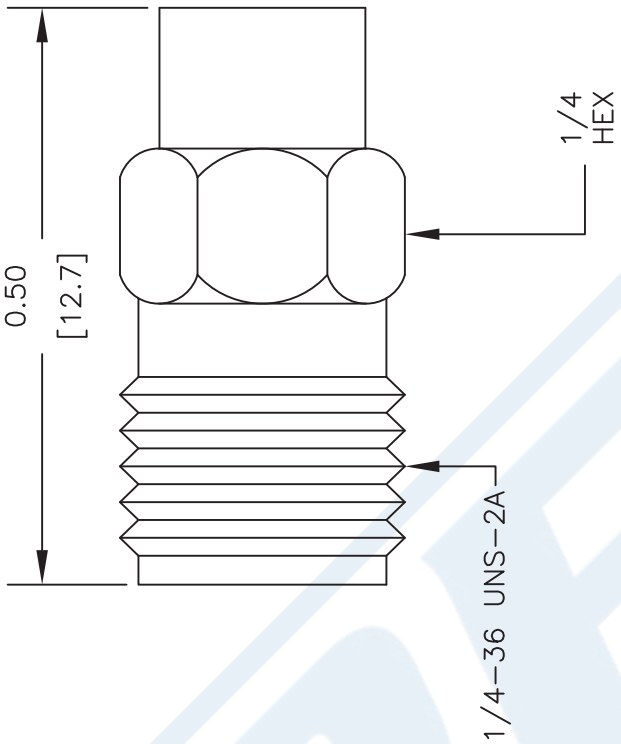

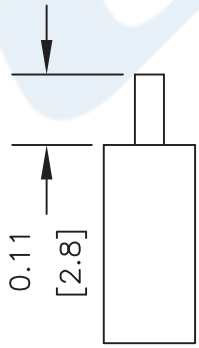

STRIPPING DIMENSIONS

ASSEMBLY PROCEDURES

1. STRIP CABLE AS SHOWN. DO NOT NICK CENTER CONDUCTOR.
2. SOLDER CONTACT TO CENTER CONDUCTOR.
3. INSERT CABLE INTO BODY UNTIL OUTER CONDUCTOR IS FLUSH WITH BODY SHOULDER. SOLDER OUTER CONDUCTOR TO BODY.

NOTES:
1. UNLESS OTHERWISE SPECIFIED ALL DIMENSIONS ARE NOMINAL.
2. ALL SPECIFICATIONS ARE SUBJECT TO CHANGE WITHOUT NOTICE AT ANY TIME.
3. DIMENSIONS ARE IN INCHES [mm].
4. FITS MIL-C-17 AND EQUIVALENT CABLES.

DWG TITLE
PE4115

REV. A	FSCM NO. 53919	CAD FILE 110811	SCALE N/A	SIZE A	2233

PASTERNACK®
Pasternack Enterprises, Inc.
P.O. Box 16759 | Irvine | CA | 92623
Phone: (949) 261-1920 | **Fax:** (949) 261-7451
Website: www.pasternack.com | **E-Mail:** sales@pasternack.com

© 2016 Pasternack Enterprises All Rights Reserved

PASTERNACK
an INFINITE brand

RG402 Tinned Coax Cable with Tinned Copper Outer Conductor

RF Cables
Technical Data Sheet

PE-SR402TN

Configuration

- Semi-Rigid Cable
- MIL-C-17

Electrical Specifications

Description	Minimum	Typical	Maximum	Units
Frequency Range	DC		36	GHz
Impedance		50		Ohms
Velocity of Propagation		69.5		%

Performance by Frequency Band

Description	F1	F2	F3	F4	F5	Units
Frequency	1	10	20			GHz
Attenuation, Typ	12	45	70			dB/100ft
	39.37	147.64	229.66			dB/100m
Input Power (CW), Max	450	120	70			Watts

Mechanical Specifications

Min. Bend Radius (Installation) 1 in [25.4 mm]

Construction Specifications

Description	Material and Plating	Diameter
Inner Conductor	Copper Clad Steel, Silver, Strand	0.036 in [0.91 mm]
Conductor Type	Solid	
Dielectric	PTFE	0.118 in [3 mm]
Outer Conductor	Tinned Copper	0.141 in [3.58 mm]

Click the following link (or enter part number in “SEARCH” on website) to obtain additional part information including price, inventory and certifications: RG402 Tinned Coax Cable with Tinned Copper Outer Conductor PE-SR402TN

Pasternack Enterprises, Inc. • P.O. Box 16759, Irvine, CA 92623
Phone: (866) 727-8376 or (949) 261-1920 • **Fax:** (949) 261-7451
Sales@Pasternack.com • Techsupport@Pasternack.com

© 2020 Pasternack Enterprises All Rights Reserved

RG402 Tinned Coax Cable with Tinned Copper Outer Conductor

Environmental Specifications

Temperature

Operating Range	-55 to +125 deg C

Compliance Certifications (see product page for current document)

Plotted and Other Data

Notes:

RG402 Tinned Coax Cable with Tinned Copper Outer Conductor from Pasternack Enterprises has same day shipment for domestic and International orders. Our RF, microwave and millimeter wave products maintain a 99.4% availability and are part of the broadest selection in the industry.

Click the following link (or enter part number in “SEARCH” on website) to obtain additional part information including price, inventory and certifications: RG402 Tinned Coax Cable with Tinned Copper Outer Conductor PE-SR402TN

URL: https://www.pasternack.com/50-ohm-semi-rigid-rg402-tinned-tinned-copper-pe-sr402tn-p.aspx

The information contained in this document is accurate to the best of our knowledge and representative of the part described herein. It may be necessary to make modifications to the part and/or the documentation of the part, in order to implement improvements. Pasternack reserves the right to make such changes as required. Unless otherwise stated, all specifications are nominal. Pasternack does not make any representation or warranty regarding the suitability of the part described herein for any particular purpose, and Pasternack does not assume any liability arising out of the use of any part or documentation.

Pasternack Enterprises, Inc. • P.O. Box 16759, Irvine, CA 92623
Phone: (866) 727-8376 or (949) 261-1920 • **Fax:** (949) 261-7451
Sales@Pasternack.com • Techsupport@Pasternack.com

© 2020 Pasternack Enterprises All Rights Reserved

PE-SR402TN CAD Drawing

RG402 Tinned Coax Cable with Tinned Copper Outer Conductor

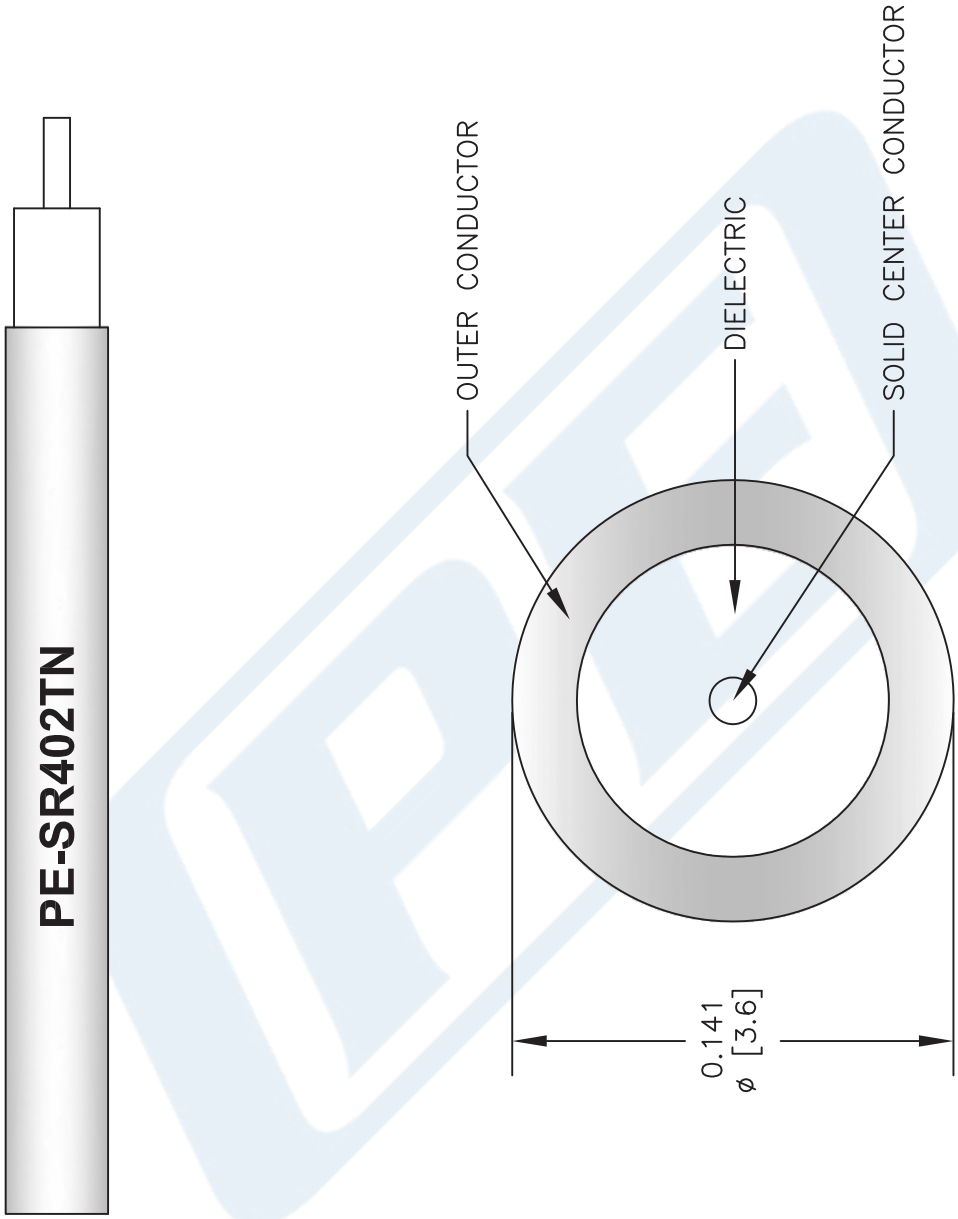

NOTES:
1. UNLESS OTHERWISE SPECIFIED ALL DIMENSIONS ARE NOMINAL.
2. ALL SPECIFICATIONS ARE SUBJECT TO CHANGE WITHOUT NOTICE AT ANY TIME.
3. DIMENSIONS ARE IN INCHES [mm].

DWG TITLE
PE-SR402TN

FSCM NO. 53919

CAD FILE 073113 | SCALE N/A | SIZE A | 2233

PASTERNACK®
Pasternack Enterprises, Inc.
P.O. Box 16759 | Irvine | CA | 92623
Phone: (949) 261-1920 | **Fax:** (949) 261-7451
Website: www.pasternack.com | **E-Mail:** sales@pasternack.com

© 2020 Pasternack Enterprises All Rights Reserved