PASTERNACK®
THE ENGINEER'S RF SOURCE

75 Ohm MCX Plug Connector Crimp/Solder Attachment for RG179, RG187

Configuration

- MCX Plug Connector
- 75 Ohms
- Straight Body Geometry
- RG179, RG187 Interface Type
- Crimp/Solder Attachment

Features

- Max. Operating Frequency 1,000 MHz
- Good VSWR of 1.3:1
- Gold Plated Brass Contact
- 30 µin minimum contact plating

Applications

- General Purpose Test
- Custom Cable Assemblies

Description

Pasternack's PE44298 75 ohm MCX plug connector with crimp/solder attachment for RG179 and RG187 is part of our full line of RF components available for same-day shipping. Our MCX plug connector operates up to a maximum frequency of 1,000 MHz and offers good VSWR of 1.3:1.

Our 75 ohm MCX plug connector PE44298 datasheet specifications and drawing with dimensions are shown below in this PDF. Pasternack's broad catalog of RF, microwave and millimeter wave connectors allows designers to configure and customize their signal connections however they like. Whether the need is to provide an I/O for a board design, or simply create a custom cable assembly configuration, Pasternack has the right connector for the job. Pasternack can also expertly build your custom cable assemblies for you and ship same-day.

Electrical Specifications

Description	Minimum	Typical	Maximum	Units
Frequency Range	DC		1,000	MHz
VSWR			1.3:1	
Operating Voltage (AC)			250	Vrms

Mechanical Specifications

Size

Length	0.808 in [20.52 mm]
Width/Dia.	0.235 in [5.97 mm]
Weight	0.009 lbs [4.08 g]

Click the following link (or enter part number in "SEARCH" on website) to obtain additional part information including price, inventory and certifications: 75 Ohm MCX Plug Connector Crimp/Solder Attachment for RG179, RG187 PE44298

Pasternack Enterprises, Inc. • P.O. Box 16759, Irvine, CA 92623
Phone: (866) 727-8376 or (949) 261-1920 • **Fax:** (949) 261-7451
Sales@Pasternack.com • Techsupport@Pasternack.com

© 2016 Pasternack Enterprises All Rights Reserved

75 Ohm MCX Plug Connector Crimp/Solder Attachment for RG179, RG187

Material Specifications

Description	Material	Plating
Contact	Brass	Gold 30 µin minimum
Insulation	PTFE	
Body	Brass	Gold 3 µin minimum

Environmental Specifications

Temperature

Operating Range -55 to +155 deg C

Compliance Certifications (see product page for current document)

Plotted and Other Data

Notes:

75 Ohm MCX Plug Connector Crimp/Solder Attachment for RG179, RG187 from Pasternack Enterprises has same day shipment for domestic and International orders. Our RF, microwave and millimeter wave products maintain a 99% availability and are part of the broadest selection in the industry.

Click the following link (or enter part number in "SEARCH" on website) to obtain additional part information including price, inventory and certifications: 75 Ohm MCX Plug Connector Crimp/Solder Attachment for RG179, RG187 PE44298

URL: https://www.pasternack.com/mcx-plug-standard-rg179-rg187-connector-pe44298-p.aspx

The information contained in this document is accurate to the best of our knowledge and representative of the part described herein. It may be necessary to make modifications to the part and/or the documentation of the part, in order to implement improvements. Pasternack reserves the right to make such changes as required. Unless otherwise stated, all specifications are nominal. Pasternack does not make any representation or warranty regarding the suitability of the part described herein for any particular purpose, and Pasternack does not assume any liability arising out of the use of any part or documentation.

Pasternack Enterprises, Inc. • P.O. Box 16759, Irvine, CA 92623
Phone: (866) 727-8376 or (949) 261-1920 • **Fax:** (949) 261-7451
Sales@Pasternack.com • Techsupport@Pasternack.com

© 2016 Pasternack Enterprises All Rights Reserved

PE44298 CAD Drawing

75 Ohm MCX Plug Connector Crimp/Solder Attachment for RG179, RG187

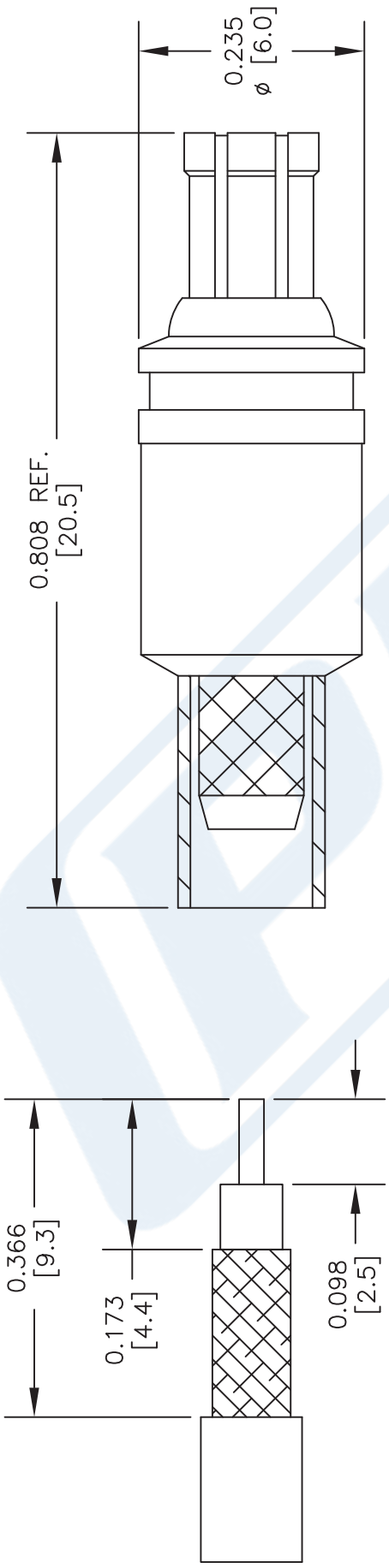

STRIPPING DIMENSIONS

ASSEMBLY PROCEDURES

1. SLIDE FERRULE ONTO CABLE, STRIP CABLE AS SHOWN & TIN CENTER CONDUCTOR.
2. INSERT DIELECTRIC AND CENTER CONDUCTOR INTO BODY. SOLDER CENTER CONDUCTOR TO CONTACT THROUGH HOLE IN BODY. REMOVE EXCESS SOLDER. SLIDE FERRULE FORWARD & CRIMP.

CRIMP SIZE REQUIRED

FERRULE: .128" HEX CRIMP TOOL

NOTES:
1. UNLESS OTHERWISE SPECIFIED ALL DIMENSIONS ARE NOMINAL.
2. ALL SPECIFICATIONS ARE SUBJECT TO CHANGE WITHOUT NOTICE AT ANY TIME.
3. DIMENSIONS ARE IN INCHES [mm].
4. FITS MIL-C-17 AND EQUIVALENT CABLES.

DWG TITLE **PE44298**

CAD REV. A	FSCM NO. 53919	CAD FILE 090612	SCALE N/A	SIZE A	2233

PASTERNACK®
Pasternack Enterprises, Inc.
P.O. Box 16759 | Irvine | CA | 92623
Phone: (949) 261-1920 | **Fax:** (949) 261-7451
Website: www.pasternack.com | **E-Mail:** sales@pasternack.com

© 2016 Pasternack Enterprises All Rights Reserved

PASTERNACK®
THE ENGINEER'S RF SOURCE

75 Ohm Mini SMB Plug Connector Crimp/ Solder Attachment for RG179, RG187

Configuration

- Mini SMB Plug Connector
- 75 Ohms
- Straight Body Geometry
- RG179, RG187 Interface Type
- Crimp/Solder Attachment

Features

- Max. Operating Frequency 1,000 MHz
- Excellent VSWR of 1.2:1
- Gold Plated Beryllium Copper Contact
- 30 µin minimum contact plating

Applications

- General Purpose Test
- Custom Cable Assemblies

Description

Pasternack's PE4993 75 ohm Mini SMB plug connector with crimp/solder attachment for RG179 and RG187 is part of our full line of RF components available for same-day shipping. Our Mini SMB plug connector operates up to a maximum frequency of 1,000 MHz and offers excellent VSWR of 1.2:1.

Our 75 ohm Mini SMB plug connector PE4993 datasheet specifications and drawing with dimensions are shown below in this PDF. Pasternack's broad catalog of RF, microwave and millimeter wave connectors allows designers to configure and customize their signal connections however they like. Whether the need is to provide an I/O for a board design, or simply create a custom cable assembly configuration, Pasternack has the right connector for the job. Pasternack can also expertly build your custom cable assemblies for you and ship same-day.

Electrical Specifications

Description	Minimum	Typical	Maximum	Units
Frequency Range	DC		1,000	MHz
VSWR			1.2:1	
Operating Voltage (AC)			335	Vrms

Mechanical Specifications

Size

Length	1.028 in [26.11 mm]
Width/Dia.	0.305 in [7.75 mm]
Weight	0.015 lbs [6.8 g]

Click the following link (or enter part number in "SEARCH" on website) to obtain additional part information including price, inventory and certifications: 75 Ohm Mini SMB Plug Connector Crimp/Solder Attachment for RG179, RG187 PE4993

Pasternack Enterprises, Inc. • P.O. Box 16759, Irvine, CA 92623
Phone: (866) 727-8376 or (949) 261-1920 • **Fax:** (949) 261-7451
Sales@Pasternack.com • Techsupport@Pasternack.com

© 2016 Pasternack Enterprises All Rights Reserved

75 Ohm Mini SMB Plug Connector Crimp/ Solder Attachment for RG179, RG187

Material Specifications

Description	Material	Plating
Contact	Beryllium Copper	Gold 30 µin minimum
Insulation	PTFE	
Body	Brass	Nickel 100 µin minimum

Environmental Specifications

Temperature

Operating Range -65 to +165 deg C

Compliance Certifications (see product page for current document)

Plotted and Other Data

Notes:

75 Ohm Mini SMB Plug Connector Crimp/Solder Attachment for RG179, RG187 from Pasternack Enterprises has same day shipment for domestic and International orders. Our RF, microwave and millimeter wave products maintain a 99% availability and are part of the broadest selection in the industry.

Click the following link (or enter part number in "SEARCH" on website) to obtain additional part information including price, inventory and certifications: 75 Ohm Mini SMB Plug Connector Crimp/Solder Attachment for RG179, RG187 PE4993

URL: https://www.pasternack.com/mini-smb-plug-rg179-rg187-connector-pe4993-p.aspx

The information contained in this document is accurate to the best of our knowledge and representative of the part described herein. It may be necessary to make modifications to the part and/or the documentation of the part, in order to implement improvements. Pasternack reserves the right to make such changes as required. Unless otherwise stated, all specifications are nominal. Pasternack does not make any representation or warranty regarding the suitability of the part described herein for any particular purpose, and Pasternack does not assume any liability arising out of the use of any part or documentation.

Pasternack Enterprises, Inc. • P.O. Box 16759, Irvine, CA 92623
Phone: (866) 727-8376 or (949) 261-1920 • **Fax:** (949) 261-7451
Sales@Pasternack.com • Techsupport@Pasternack.com

© 2016 Pasternack Enterprises All Rights Reserved

PE4993 CAD Drawing

75 Ohm Mini SMB Plug Connector Crimp/Solder Attachment for RG179, RG187

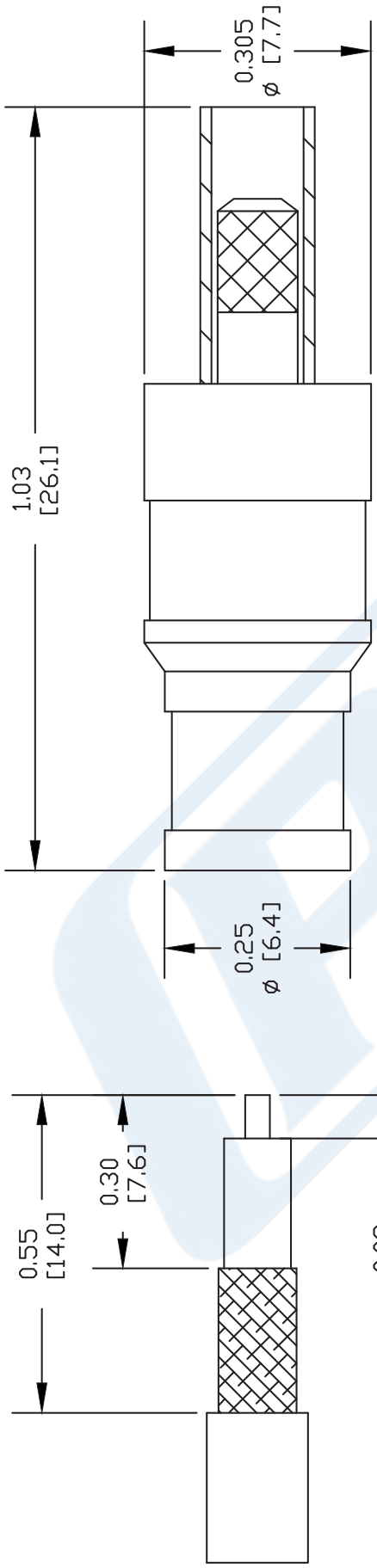

STRIPPING DIMENSIONS

CRIMP SIZE REQUIRED

CONTACT: SOLDER
FERRULE: .128" HEX CRIMP TOOL

NOTES:
1. UNLESS OTHERWISE SPECIFIED ALL DIMENSIONS ARE NOMINAL.
2. ALL SPECIFICATIONS ARE SUBJECT TO CHANGE WITHOUT NOTICE AT ANY TIME.
3. DIMENSIONS ARE IN INCHES [mm].
4. FITS MIL-C-17 AND EQUIVALENT CABLES.

DWG TITLE
PE4993

FSCM NO. 53919

CAD FILE 102203 | SCALE N/A | SIZE A | 2233

PASTERNACK®
Pasternack Enterprises, Inc.
P.O. Box 16759 | Irvine | CA | 92623
Phone: (949) 261-1920 | **Fax:** (949) 261-7451
Website: www.pasternack.com | **E-Mail:** sales@pasternack.com

© 2016 Pasternack Enterprises All Rights Reserved

75 Ohm Flexible RG179 Coax Cable Single Shielded with Tan FEP Jacket

Configuration

- Flexible Cable
- 1 Shield(s)

Electrical Specifications

Description	Minimum	Typical	Maximum	Units
Frequency Range	DC		3	GHz
Impedance		75		Ohms
Velocity of Propagation		70		%
Operating Voltage (AC)			900	Vrms
Nominal Capacitance		19.4 [63.65]		pF/ft [pF/m]

Performance by Frequency Band

Description	F1	F2	F3	F4	F5	Units
Frequency	100	400	1,000			MHz
Attenuation, Typ	9.06	18.4	30			dB/100ft
	29.72	60.37	98.43			dB/100m

Mechanical Specifications

Diameter	0.1 in [2.54 mm]
Weight	0.01 lbs/ft [0.01 Kg/m]
Min. Bend Radius (Repeated)	0.4 in [10.16 mm]

Construction Specifications

Description	Material and Plating	Diameter
Inner Conductor	Copper Clad Steel, Silver, 7 Strands	0.012 in [0.3 mm]
Conductor Type	Stranded	
Dielectric	PTFE	0.063 in [1.6 mm]
First Shield	Silver Plated Copper Braid	0.08 in [2.03 mm]

Click the following link (or enter part number in “SEARCH” on website) to obtain additional part information including price, inventory and certifications: 75 Ohm Flexible RG179 Coax Cable Single Shielded with Tan FEP Jacket RG179B/U

Pasternack Enterprises, Inc. • P.O. Box 16759, Irvine, CA 92623
Phone: (866) 727-8376 or (949) 261-1920 • **Fax:** (949) 261-7451
Sales@Pasternack.com • Techsupport@Pasternack.com

© 2017 Pasternack Enterprises All Rights Reserved

75 Ohm Flexible RG179 Coax Cable Single Shielded with Tan FEP Jacket

Jacket	FEP, Tan	0.1 in [2.54 mm]

Environmental Specifications

Temperature

Operating Range	-55 to +200 deg C

Compliance Certifications (see product page for current document)

Plotted and Other Data

Notes:

75 Ohm Flexible RG179 Coax Cable Single Shielded with Tan FEP Jacket from Pasternack Enterprises has same day shipment for domestic and International orders. Our RF, microwave and millimeter wave products maintain a 99.4% availability and are part of the broadest selection in the industry.

Click the following link (or enter part number in "SEARCH" on website) to obtain additional part information including price, inventory and certifications: 75 Ohm Flexible RG179 Coax Cable Single Shielded with Tan FEP Jacket RG179B/U

URL: https://www.pasternack.com/flexible-0.100-rg179-75-ohm-coax-cable-fep-jacket-rg179b-u-p.aspx

The information contained in this document is accurate to the best of our knowledge and representative of the part described herein. It may be necessary to make modifications to the part and/or the documentation of the part, in order to implement improvements. Pasternack reserves the right to make such changes as required. Unless otherwise stated, all specifications are nominal. Pasternack does not make any representation or warranty regarding the suitability of the part described herein for any particular purpose, and Pasternack does not assume any liability arising out of the use of any part or documentation.

Pasternack Enterprises, Inc. • P.O. Box 16759, Irvine, CA 92623
Phone: (866) 727-8376 or (949) 261-1920 • **Fax:** (949) 261-7451
Sales@Pasternack.com • Techsupport@Pasternack.com

© 2017 Pasternack Enterprises All Rights Reserved

RG179B/U CAD Drawing

75 Ohm Flexible RG179 Coax Cable Single Shielded with Tan FEP Jacket

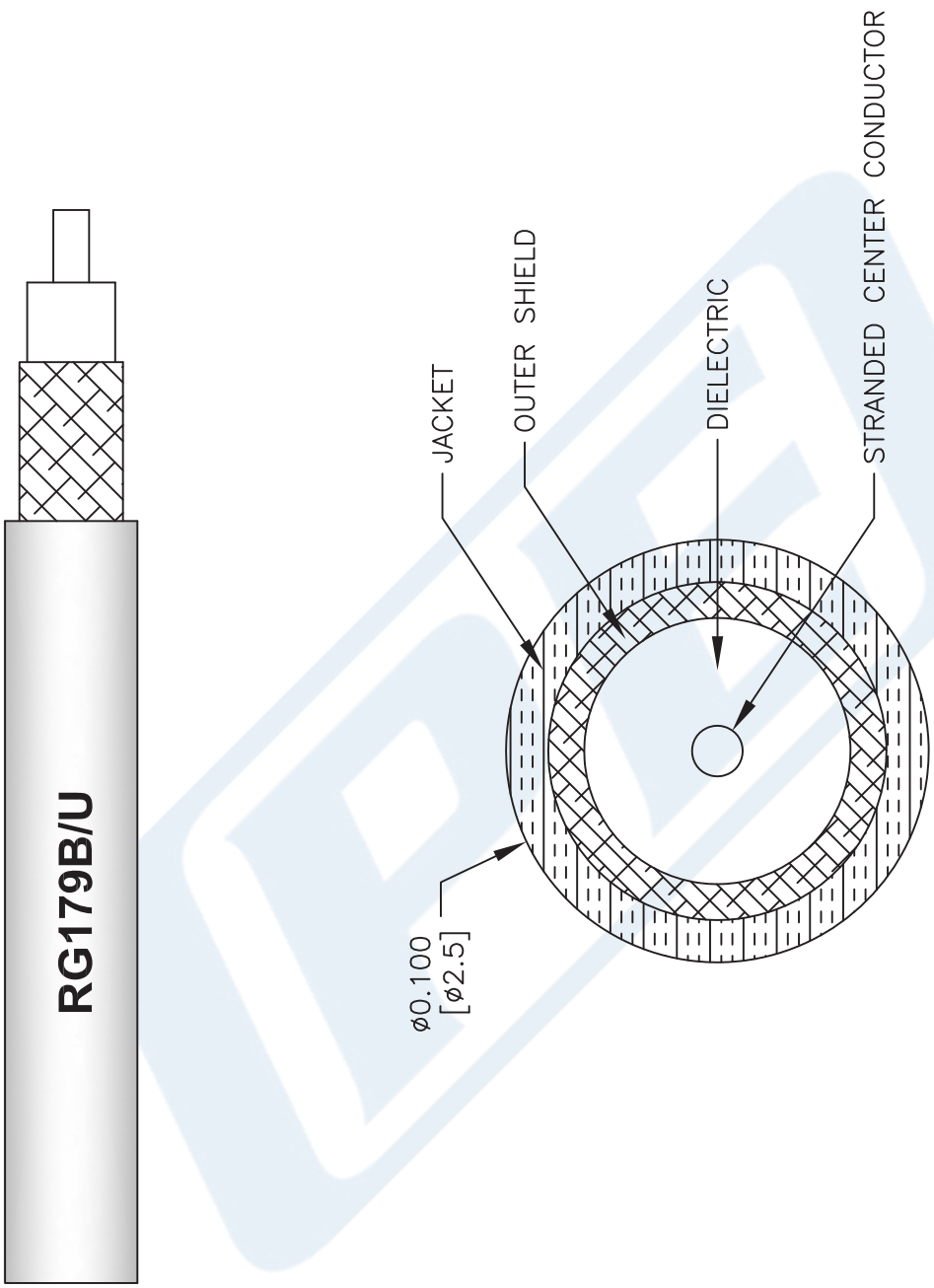

NOTES:
1. UNLESS OTHERWISE SPECIFIED ALL DIMENSIONS ARE NOMINAL.
2. ALL SPECIFICATIONS ARE SUBJECT TO CHANGE WITHOUT NOTICE AT ANY TIME.
3. DIMENSIONS ARE IN INCHES [mm].

DWG TITLE
RG179B/U

FSCM NO. 53919

CAD FILE 111716 | SCALE N/A | SIZE A | 41742

PASTERNACK®
THE ENGINEER'S RF SOURCE
Pasternack Enterprises, Inc.
P.O. Box 16759 | Irvine | CA | 92623
Phone: (949) 261-1920 | **Fax:** (949) 261-7451
Website: www.pasternack.com | **E-Mail:** sales@pasternack.com

© 2017 Pasternack Enterprises All Rights Reserved