PASTERNACK®
THE ENGINEER'S RF SOURCE

2.92mm Male Connector Clamp/Solder Attachment for PE-SR047FL, PE-SR047AL, PE-047SR

RF Connectors Technical Data Sheet PE44797

Configuration

- 2.92mm Male Connector
- 50 Ohms
- Straight Body Geometry
- PE-SR047FL, PE-SR047AL, PE-047SR Interface Type
- Clamp/Solder Attachment
- 5/16 inch Hex

Features

- Max. Operating Frequency 40 GHz
- Good VSWR of 1.35:1
- Gold over Nickel Plated Beryllium Copper Contact
- 50 µin minimum contact plating

Applications

- General Purpose Test
- Custom Cable Assemblies

Description

Pasternack's PE44797 2.92mm male connector with clamp/solder attachment for PE-SR047FL, PE-SR047AL and PE-047SR is part of our full line of RF components available for same-day shipping. Our 2.92mm male connector operates up to a maximum frequency of 40 GHz and offers good VSWR of 1.35:1.

Our 2.92mm male connector PE44797 datasheet specifications and drawing with dimensions are shown below in this PDF. Pasternack's broad catalog of RF, microwave and millimeter wave connectors allows designers to configure and customize their signal connections however they like. Whether the need is to provide an I/O for a board design, or simply create a custom cable assembly configuration, Pasternack has the right connector for the job. Pasternack can also expertly build your custom cable assemblies for you and ship same-day.

Electrical Specifications

Description	Minimum	Typical	Maximum	Units
Frequency Range	DC		40	GHz
VSWR			1.35:1	

Mechanical Specifications

Size	
Length	0.46 in [11.68 mm]
Width/Dia.	0.35 in [8.89 mm]
Weight	0.01 lbs [4.54 g]
Mating Torque	8 to 10 in-lbs [0.90 to 1.13 Nm]

Click the following link (or enter part number in "SEARCH" on website) to obtain additional part information including price, inventory and certifications: 2.92mm Male Connector Clamp/Solder Attachment for PE-SR047FL, PE-SR047AL, PE-047SR PE44797

Pasternack Enterprises, Inc. • P.O. Box 16759, Irvine, CA 92623
Phone: (866) 727-8376 or (949) 261-1920 • **Fax:** (949) 261-7451
Sales@Pasternack.com • Techsupport@Pasternack.com

© 2016 Pasternack Enterprises All Rights Reserved

2.92mm Male Connector Clamp/Solder Attachment for PE-SR047FL, PE-SR047AL, PE-047SR

Material Specifications

Description	Material	Plating
Contact	Beryllium Copper	Gold over Nickel 50 µin minimum
Insulation	PEI	
Body	Passivated Stainless Steel	SAE-AMS-2700
Coupling Nut	Passivated Stainless Steel	SAE-AMS-2700

Compliance Certifications (see product page for current document)

Plotted and Other Data

Notes:

2.92mm Male Connector Clamp/Solder Attachment for PE-SR047FL, PE-SR047AL, PE-047SR from Pasternack Enterprises has same day shipment for domestic and International orders. Our RF, microwave and millimeter wave products maintain a 99% availability and are part of the broadest selection in the industry.

Click the following link (or enter part number in "SEARCH" on website) to obtain additional part information including price, inventory and certifications: 2.92mm Male Connector Clamp/Solder Attachment for PE-SR047FL, PE-SR047AL, PE-047SR PE44797

URL: https://www.pasternack.com/2.92mm-male-standard-pe-sr047fl-pe-sr047al-pe-047sr-connector-pe44797-p.aspx

The information contained in this document is accurate to the best of our knowledge and representative of the part described herein. It may be necessary to make modifications to the part and/or the documentation of the part, in order to implement improvements. Pasternack reserves the right to make such changes as required. Unless otherwise stated, all specifications are nominal. Pasternack does not make any representation or warranty regarding the suitability of the part described herein for any particular purpose, and Pasternack does not assume any liability arising out of the use of any part or documentation.

Pasternack Enterprises, Inc. • P.O. Box 16759, Irvine, CA 92623
Phone: (866) 727-8376 or (949) 261-1920 • **Fax:** (949) 261-7451
Sales@Pasternack.com • Techsupport@Pasternack.com

© 2016 Pasternack Enterprises All Rights Reserved

PE44797 CAD Drawing

2.92mm Male Connector Clamp/Solder Attachment for PE-SR047FL, PE-SR047AL, PE-047SR

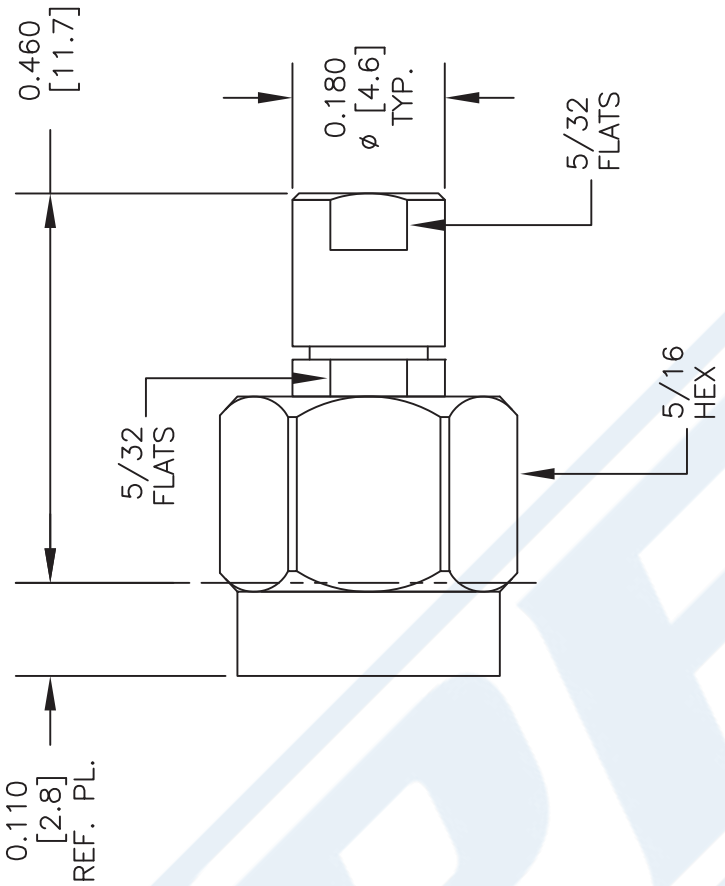

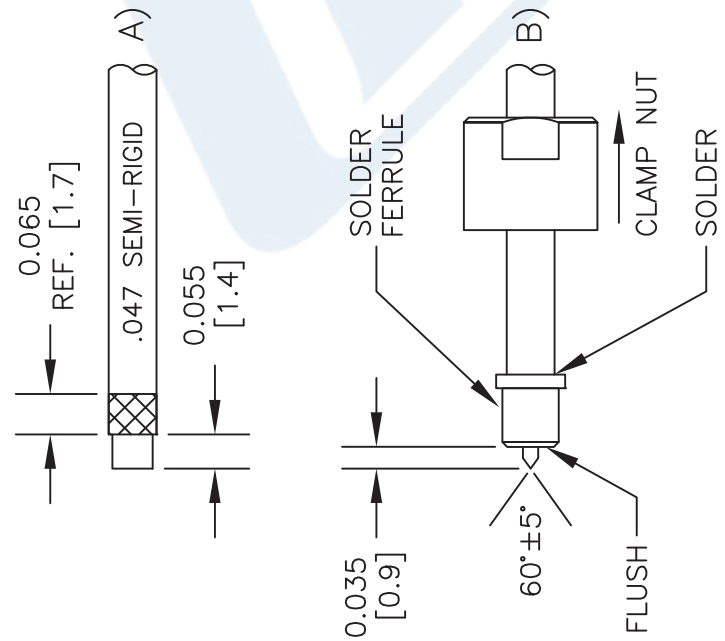

STRIPPING DIMENSIONS

ASSEMBLY PROCEDURES

1. STRIP CABLE AS SHOWN IN (A). DO NOT NICK DIELECTRIC.
2. PRE-TIN CABLE JACKET TO APPROXIMATE DIMENSION AS SHOWN IN (A).
3. INSERT CABLE THRU ADAPTER UNTIL IT BOTTOMS OUT. SOLDER OUTER CONDUCTOR TO ADAPTER & TRIM DIELECTRIC AS SHOWN IN (B).
4. SCREW ASSEMBLY INTO BODY & TIGHTEN NUT.

NOTES:
1. UNLESS OTHERWISE SPECIFIED ALL DIMENSIONS ARE NOMINAL.
2. ALL SPECIFICATIONS ARE SUBJECT TO CHANGE WITHOUT NOTICE AT ANY TIME.
3. DIMENSIONS ARE IN INCHES [mm].
4. FITS MIL-C-17 AND EQUIVALENT CABLES.

DWG TITLE PE44797

CAD FILE 042313 | SCALE N/A | SIZE A | 2233

FSCM NO. 53919

PASTERNACK®
Pasternack Enterprises, Inc.
P.O. Box 16759 | Irvine | CA | 92623
Phone: (949) 261-1920 | **Fax:** (949) 261-7451
Website: www.pasternack.com | **E-Mail:** sales@pasternack.com

© 2016 Pasternack Enterprises All Rights Reserved

PASTERNACK®
www.pasternack.com

N Female Precision Connector Solder Attachment For PE-047SR, PE-SR047AL, PE-SR047FL

TECHNICAL DATA SHEET PE4945

N Female Precision Connector Solder Attachment For PE-047SR, PE-SR047AL, PE-SR047FL

Configuration

Connector	N Female
Connector Interface Type	PE-047SR,PE-SR047AL,PE-SR047FL
Cable Attachment Method (Shield/Contact)	Solder/Solder
Connector Design	Precision
Body Style	Straight

Electrical Specifications

Impedance, Ohms	50

Mechanical Specifications

Size

Length, in [mm]	1.335 [33.91]
Width/Dia., in [mm]	0.695 [17.65]
Weight, lbs [g]	0.089 [40.37]

Connector

Type	N Female
Contact Material and Plating	Gold
Outer Conductor Material and Plating	Brass, Gold
Body Material and Plating	Brass, Nickel
Dielectric Type	Teflon

Compliance Certifications (visit www.Pasternack.com for current document)

RoHS Compliant	Yes

Plotted and Other Data

Notes:	Values at 25 °C, sea level

N Female Precision Connector Solder Attachment For PE-047SR, PE-SR047AL, PE-SR047FL from Pasternack Enterprises has same day shipment for domestic and International orders. Our RF, microwave and fiber optic products maintain a 99% availability and are part of the broadest selection in the industry.

Click the following link (or enter part number in “SEARCH” on website) to obtain additional part information including price, inventory and certifications: N Female Precision Connector Solder Attachment For PE-047SR, PE-SR047AL, PE-SR047FL PE4945

URL: http://www.pasternack.com/n-female-standard-pe-047sr-pe-sr047al-pe-sr047fl-connector-pe4945-p.aspx

The information contained in this document is accurate to the best of our knowledge and representative of the part described herein. It may be necessary to make modifications to the part and/or the documentation of the part, in order to implement improvements. Pasternack reserves the right to make such changes as required. Unless otherwise stated, all specifications are nominal.

Pasternack Enterprises, Inc. • P.O. Box 16759, Irvine, CA 92623
Phone: (866) 727-8376 or (949) 261-1920 • **Fax:** (949) 261-7451
Sales@Pasternack.com • Techsupport@Pasternack.com

© 2013 Pasternack Enterprises All Rights Reserved

PE4945 CAD Drawing

N Female Precision Connector Solder Attachment For
PE-047SR, PE-SR047AL, PE-SR047FL

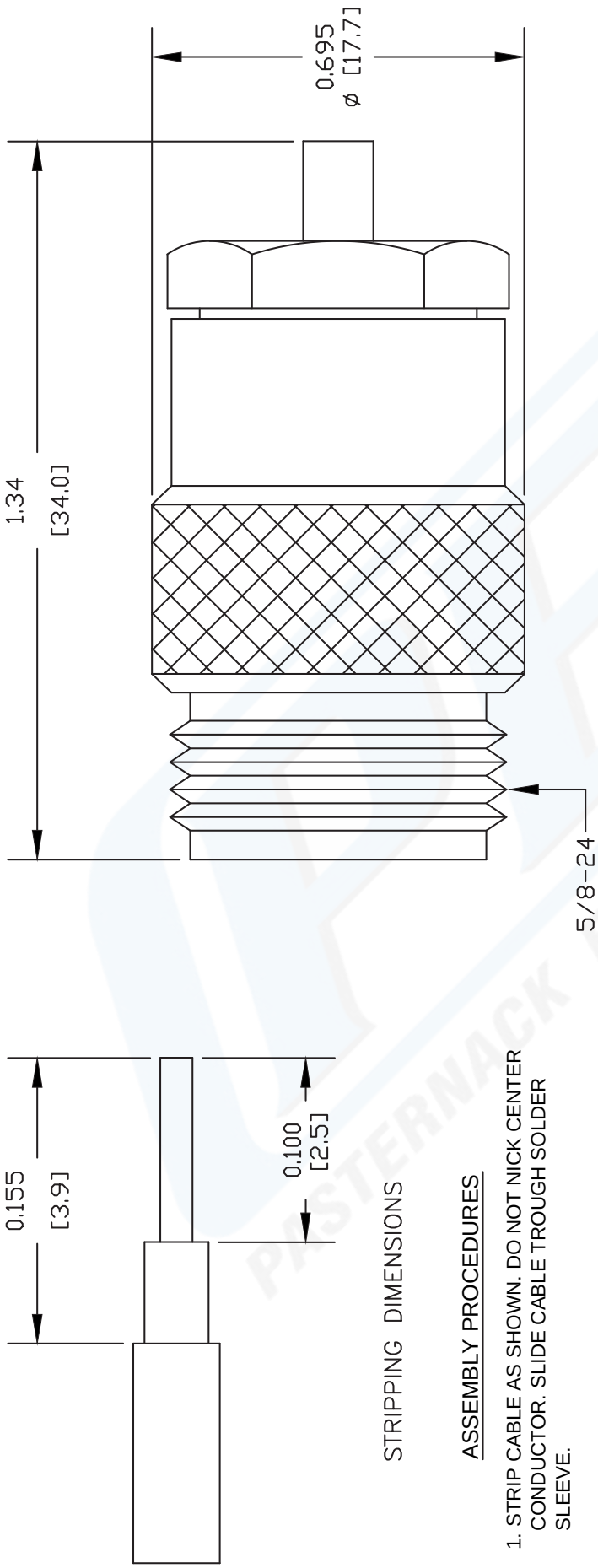

STRIPPING DIMENSIONS

ASSEMBLY PROCEDURES

1. STRIP CABLE AS SHOWN. DO NOT NICK CENTER CONDUCTOR. SLIDE CABLE TROUGH SOLDER SLEEVE.
2. INSERT CENTER CONDUCTOR INTO CONTACT UNTIL DIELECTRIC BOTTOMS INSIDE CONTACT. SOFT SOLDER CENTER CONDUCTOR TO CONTACT.
3. THREAD BODY ONTO SOLDER SLEEVE AND TIGHTEN SECURELY. USING ASSEMBLY TOOL, PRESS CONTACT INTO INSULATOR. SOLDER OUTER CONDUCTOR TO SOLDER SLEEVE.

NOTES:
1. UNLESS OTHERWISE SPECIFIED ALL DIMENSIONS ARE NOMINAL.
2. ALL SPECIFICATIONS ARE SUBJECT TO CHANGE WITHOUT NOTICE AT ANY TIME.
3. DIMENSIONS ARE IN INCHES [mm].
4. FITS MIL-C-17 AND EQUIVALENT CABLES.

DWG TITLE PE4945	CAD FILE 061402	SCALE N/A	SIZE A	127
FSCM NO. 53919			

PASTERNACK®
Pasternack Enterprises, Inc.
P.O. Box 16759 | Irvine | CA | 92623
Phone: (949) 261-1920 | **Fax:** (949) 261-7451
Website: www.pasternack.com | **E-Mail:** sales@pasternack.com

© 2013 Pasternack Enterprises All Rights Reserved

047 Semi-rigid Coax Cable with Tinned Aluminum Outer Conductor

TECHNICAL DATA SHEET PE-SR047AL

047 Semi-rigid Coax Cable with Tinned Aluminum Outer Conductor

Configuration

Inner Conductor Material and Plating	Copper Clad Steel, Silver
Dielectric Type	PTFE
Shield Materials	Tinned Aluminum

Electrical Specifications

Impedance, Ohms	50
Velocity of Propagation, %	69.5
Maximum Operating Frequency, GHz	20
RF Shielding, dB	90
Maximum Operating Voltage, Volts	1,000

Electrical Specifications by Frequency

Frequency 1

Frequency, MHz	1000
Attenuation, dB/100ft [dB/100m]	41 [134.51]
Power Handling, Watts	32

Frequency 2

Frequency, GHz	10
Attenuation, dB/100ft [dB/100m]	130 [426.51]
Power Handling, Watts	9

Frequency 3

Frequency, GHz	20
Attenuation, dB/100ft [dB/100m]	190 [623.36]
Power Handling, Watts	6.5

Mechanical Specifications

Temperature

Operating Range, deg C	-55 to +100

Inner Conductor

Number of Strands	1
Material	Copper Clad Steel
Plating	Silver
Diameter, in [mm]	0.011 [0.28]

Dielectric:

Type	PTFE
Diameter, in [mm]	0.037 [0.94]

Click the following link (or enter part number in “SEARCH” on website) to obtain additional part information including price, inventory and certifications: 047 Semi-rigid Coax Cable with Tinned Aluminum Outer Conductor PE-SR047AL

The information contained in this document is accurate to the best of our knowledge and representative of the part described herein. It may be necessary to make modifications to the part and/or the documentation of the part, in order to implement improvements. Pasternack reserves the right to make such changes as required. Unless otherwise stated, all specifications are nominal.

Pasternack Enterprises, Inc. • P.O. Box 16759, Irvine, CA 92623
Phone: (866) 727-8376 or (949) 261-1920 • **Fax:** (949) 261-7451
Sales@Pasternack.com • Techsupport@Pasternack.com

© 2013 Pasternack Enterprises All Rights Reserved

047 Semi-rigid Coax Cable with Tinned Aluminum Outer Conductor

Shield:

Number of	1
Material 1	Tinned Aluminum

Jacket:

Diameter, in [mm]	0.047 [1.19]
One Time Minimum Bend Radius, in [mm]	0.05 [1.27]
Weight, lbs/ft [Kg/m]	0.002 [0]

Compliance Certifications (visit www.Pasternack.com for current document)

Plotted and Other Data

Notes:	Values at 25 °C, sea level

047 Semi-rigid Coax Cable with Tinned Aluminum Outer Conductor from Pasternack Enterprises has same day shipment for domestic and International orders. Our RF, microwave and fiber optic products maintain a 99% availability and are part of the broadest selection in the industry.

Click the following link (or enter part number in “SEARCH” on website) to obtain additional part information including price, inventory and certifications: 047 Semi-rigid Coax Cable with Tinned Aluminum Outer Conductor PE-SR047AL

URL: http://www.pasternack.com/semirigid-0.047-50-ohm-coax-cable-tinned-aluminum-pe-sr047al-p.aspx

The information contained in this document is accurate to the best of our knowledge and representative of the part described herein. It may be necessary to make modifications to the part and/or the documentation of the part, in order to implement improvements. Pasternack reserves the right to make such changes as required. Unless otherwise stated, all specifications are nominal.

Pasternack Enterprises, Inc. • P.O. Box 16759, Irvine, CA 92623
Phone: (866) 727-8376 or (949) 261-1920 • **Fax:** (949) 261-7451
Sales@Pasternack.com • Techsupport@Pasternack.com

© 2013 Pasternack Enterprises All Rights Reserved

PE-SR047AL CAD Drawing

047 Semi-rigid Coax Cable with Tinned Aluminum Outer Conductor

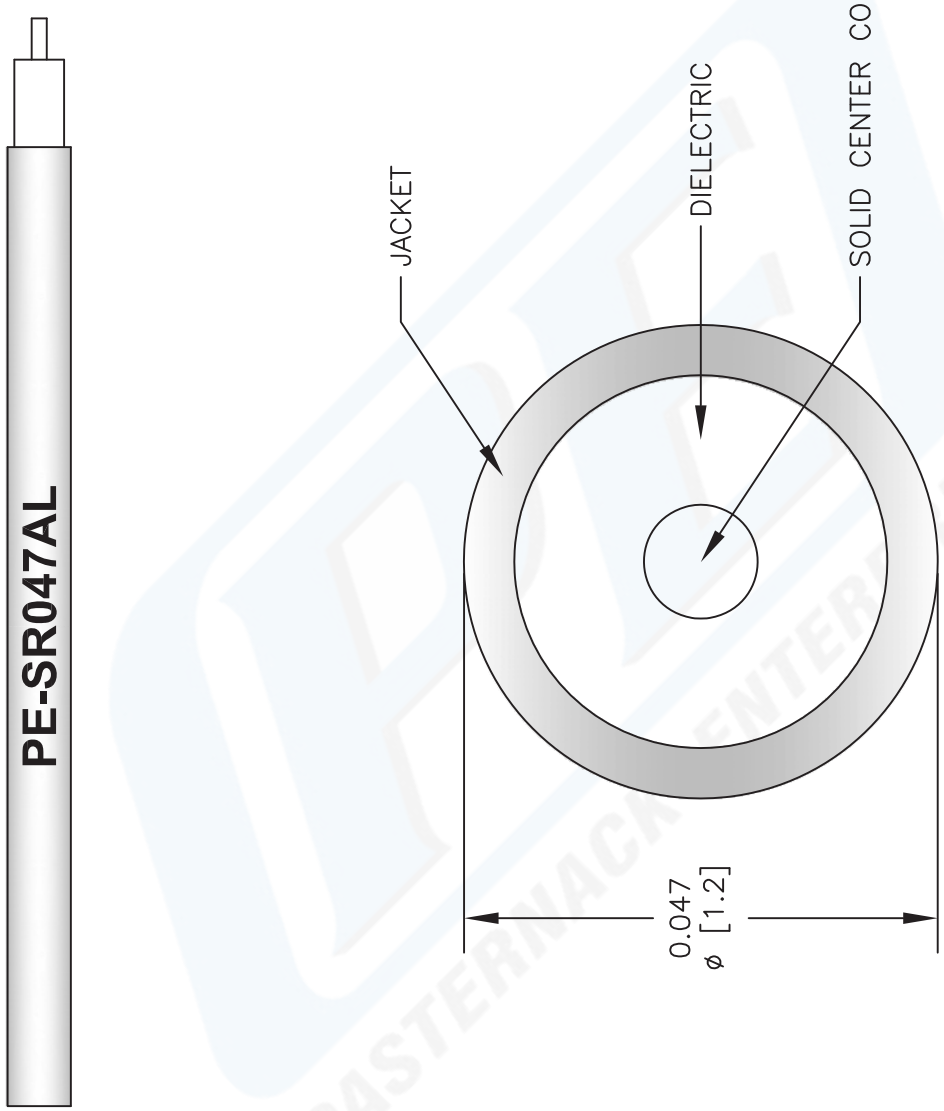

NOTES:
1. UNLESS OTHERWISE SPECIFIED ALL DIMENSIONS ARE NOMINAL.
2. ALL SPECIFICATIONS ARE SUBJECT TO CHANGE WITHOUT NOTICE AT ANY TIME.
3. DIMENSIONS ARE IN INCHES [mm].

DWG TITLE
PE-SR047AL

FSCM NO. 53919

CAD FILE 103112-B | SCALE N/A | SIZE A | 2233

PASTERNACK®
Pasternack Enterprises, Inc.
P.O. Box 16759 | Irvine | CA | 92623
Phone: (949) 261-1920 | **Fax:** (949) 261-7451
Website: www.pasternack.com | **E-Mail:** sales@pasternack.com

© 2013 Pasternack Enterprises All Rights Reserved