PASTERNACK®
www.pasternack.com

3.5mm Male Connector Clamp/Solder Attachment For PE-SR402AL, PE-SR402FL, RG402

TECHNICAL DATA SHEET PE4981

3.5mm Male Connector Clamp/Solder Attachment For PE-SR402AL, PE-SR402FL, RG402

Configuration

Connector	3.5mm Male
Connector Interface Type	PE-SR402AL,PE-SR402FL,RG402
Cable Attachment Method (Shield/Contact)	Clamp/Solder
Body Style	Straight

Electrical Specifications

Impedance, Ohms	50

Mechanical Specifications

Size

Length, in [mm]	0.86 [21.84]
Width/Dia., in [mm]	0.32 [8]
Weight, lbs [g]	0.013 [5.9]

Connector

Type	3.5mm Male
Contact Material and Plating	Beryllium Copper, Gold
Contact Plating Specification	50µ in. minimum
Coupling Nut Material and Plating	Passivated Stainless Steel
Coupling Nut Plating Specification	SAE-AMS-2700
Hex Size, in.	5/16
Torque, in-lbs [Nm]	8 [0.9]
Body Material and Plating	Passivated Stainless Steel
Body Plating Specification	SAE-AMS-2700
Dielectric Type	PCTFE

Compliance Certifications (visit www.Pasternack.com for current document)

RoHS Compliant	Yes

Plotted and Other Data

Notes:	Values at 25 °C, sea level

URL: http://www.pasternack.com/3.5mm-male-standard-pe-sr402al-pe-sr402fl-rg402-connector-pe4981-p.aspx

3.5mm Male Connector Clamp/Solder Attachment For PE-SR402AL, PE-SR402FL, RG402 from Pasternack Enterprises has same day shipment for domestic and International orders. We maintain 99% availability of the industry's broadest selection of RF, microwave and fiber optic products.

The information contained in this document is accurate to the best of our knowledge and representative of the part described herein. It may be necessary to make modifications to the part and/or the documentation of the part, in order to implement improvements. Pasternack reserves the right to make such changes as required. Unless otherwise stated, all specifications are nominal.

Pasternack Enterprises, Inc. • P.O. Box 16759, Irvine, CA 92623
Phone: (866) 727-8376 or (949) 261-1920 • **Fax:** (949) 261-7451
Sales@Pasternack.com • Techsupport@Pasternack.com

© 2013 Pasternack Enterprises All Rights Reserved

PE4981 CAD Drawing

3.5mm Male Connector Clamp/Solder Attachment For PE-SR402AL, PE-SR402FL, RG402

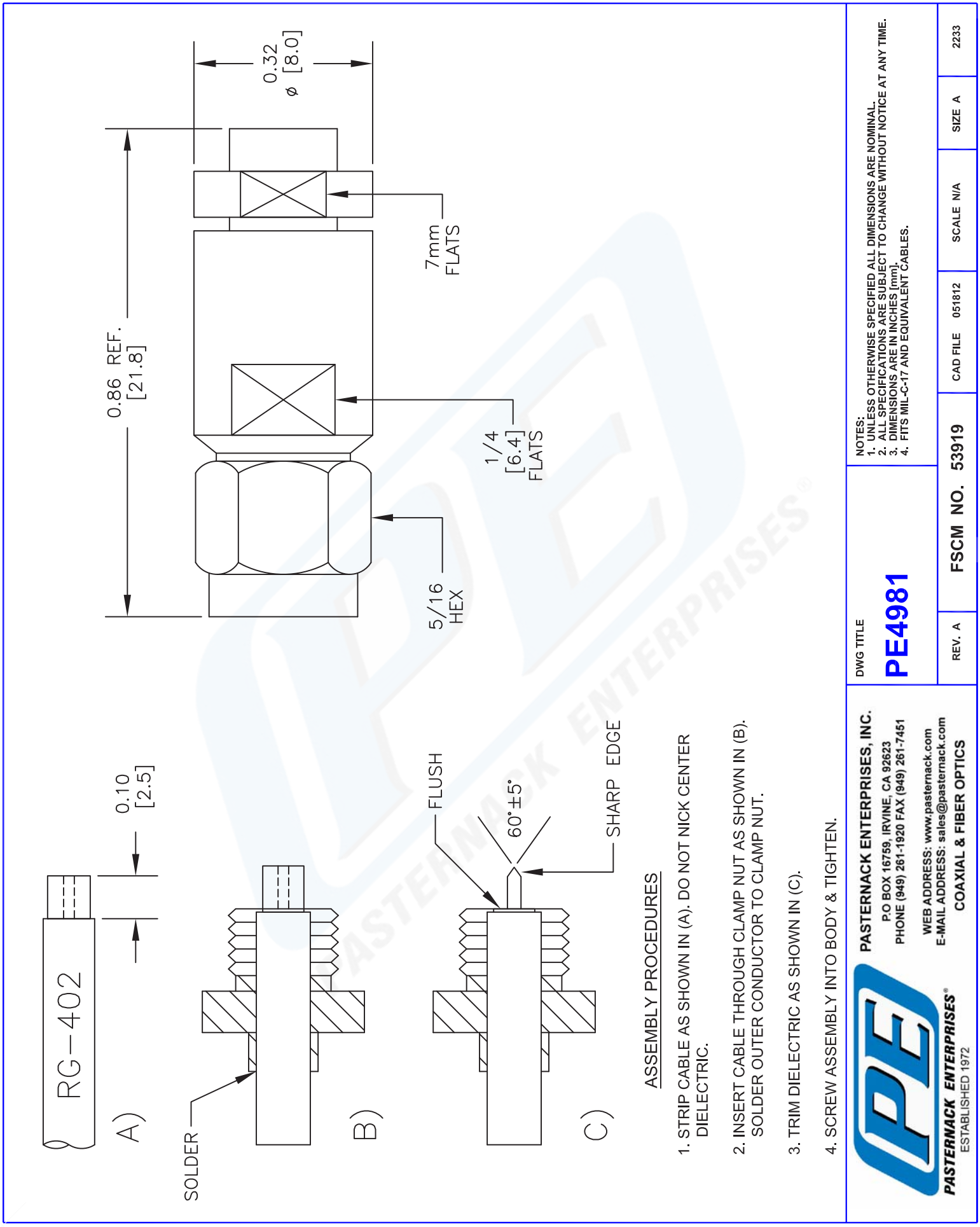

© 2012 Pasternack Enterprises All Rights Reserved

PASTERNACK®
THE ENGINEER'S RF SOURCE

N Male Connector Clamp/Solder Attachment For PE-SR402AL, PE-SR402FL, RG402

TECHNICAL DATA SHEET PE4006

Configuration

Connector	N Male
Connector Interface Type	PE-SR402AL,PE-SR402FL,RG402
Attachment Method (Shield/Contact)	Clamp/Solder
Body Style	Straight

Electrical Specifications

Frequency Range, GHz	DC to 4
Impedance, Ohms	50
Maximum VSWR	1.5:1

Mechanical Specifications

Size

Length, in [mm]	1.36 [34.54]
Width/Dia., in [mm]	0.8 [20.32]
Weight, lbs [g]	0.082 [37.19]

Connector

Type	N Male
Contact Material and Plating	Brass, Gold
Contact Plating Specification	30µ in. minimum
Coupling Nut Material and Plating	Brass, Nickel
Coupling Nut Plating Specification	100µ in. minimum
Body Material and Plating	Brass, Nickel
Body Plating Specification	100µ in. minimum
Dielectric Type	Teflon

Compliance Certifications (visit www.Pasternack.com for current document)

RoHS Compliant

Click the following link (or enter part number in "SEARCH" on website) to obtain additional part information including price, inventory and certifications: N Male Connector Clamp/Solder Attachment For PE-SR402AL, PE-SR402FL, RG402 PE4006

Pasternack Enterprises, Inc. • P.O. Box 16759, Irvine, CA 92623
Phone: (866) 727-8376 or (949) 261-1920 • **Fax:** (949) 261-7451
Sales@Pasternack.com • Techsupport@Pasternack.com

© 2014 Pasternack Enterprises All Rights Reserved

N Male Connector Clamp/Solder Attachment For PE-SR402AL, PE-SR402FL, RG402

Plotted and Other Data

Notes:

- Values at +25 °C, sea level

N Male Connector Clamp/Solder Attachment For PE-SR402AL, PE-SR402FL, RG402 from Pasternack Enterprises has same day shipment for domestic and International orders. Our RF, microwave and millimeter wave products maintain a 99% availability and are part of the broadest selection in the industry.

Click the following link (or enter part number in "SEARCH" on website) to obtain additional part information including price, inventory and certifications: N Male Connector Clamp/Solder Attachment For PE-SR402AL, PE-SR402FL, RG402 PE4006

URL: http://www.pasternack.com/n-male-standard-pe-sr402al-pe-sr402fl-rg402-connector-pe4006-p.aspx

The information contained in this document is accurate to the best of our knowledge and representative of the part described herein. It may be necessary to make modifications to the part and/or the documentation of the part, in order to implement improvements. Pasternack reserves the right to make such changes as required. Unless otherwise stated, all specifications are nominal. Pasternack does not make any representation or warranty regarding the suitability of the part described herein for any particular purpose, and Pasternack does not assume any liability arising out of the use of any part or documentation.

Pasternack Enterprises, Inc. • P.O. Box 16759, Irvine, CA 92623
Phone: (866) 727-8376 or (949) 261-1920 • **Fax:** (949) 261-7451
Sales@Pasternack.com • Techsupport@Pasternack.com

© 2014 Pasternack Enterprises All Rights Reserved

PE4006 CAD Drawing

N Male Connector Clamp/Solder Attachment For PE-SR402AL, PE-SR402FL, RG402

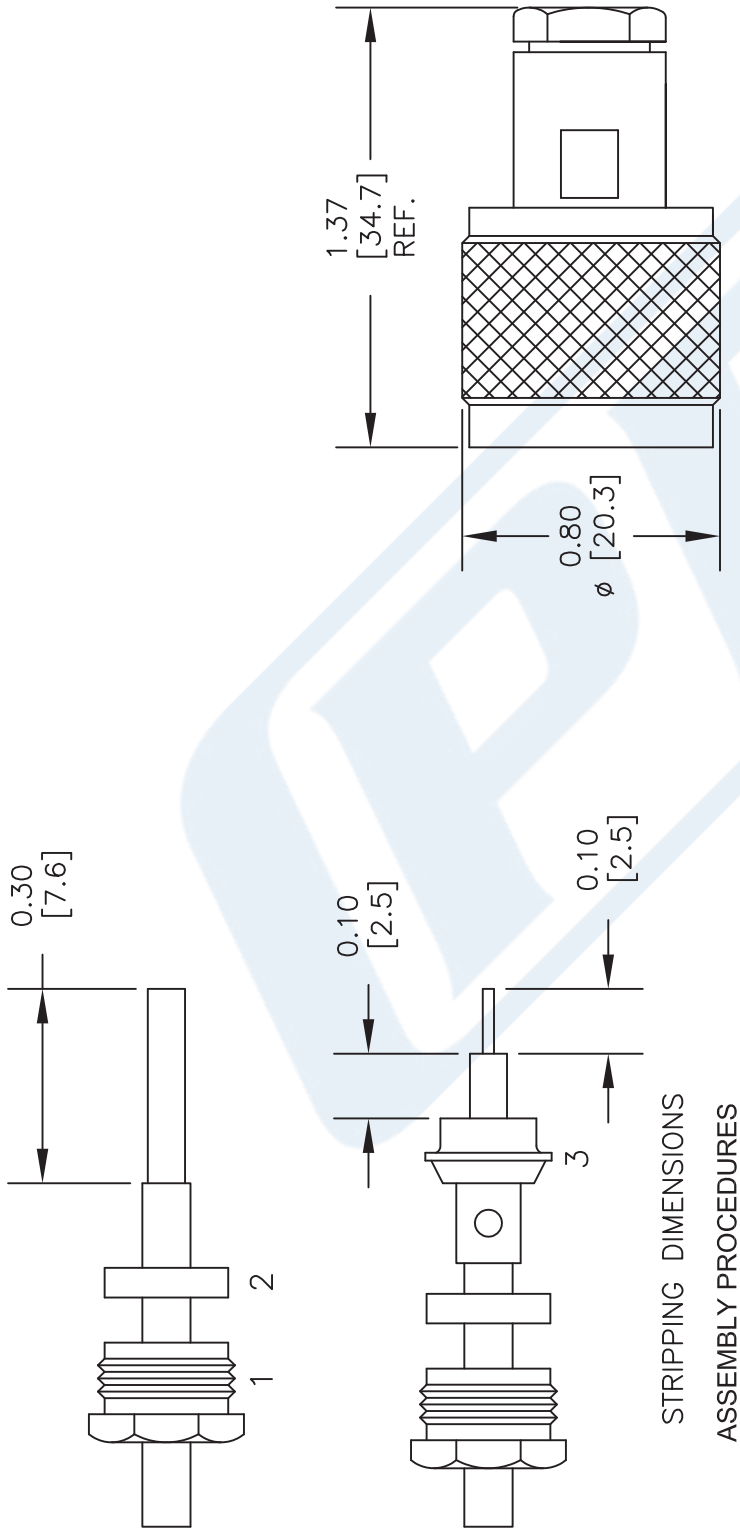

STRIPPING DIMENSIONS

ASSEMBLY PROCEDURES

1. SLIDE CLAMP NUT (1) & GASKET (2) OVER CABLE. STRIP CABLE AS SHOWN IN ASSEMBLY (A). DO NOT CUT DIELECTRIC.
2. SLIDE ADAPTER (3) OVER CABLE UNTIL ADAPTER (3) BOTTOMS ON OUTER CONDUCTOR. SOLDER ADAPTER (3) TO OUTER CONDUCTOR USING MINIMUM HEAT.
3. STRIP CABLE AS SHOWN IN ASSEMBLY (B). SOLDER CONTACT TO CENTER CONDUCTOR. SLIDE ASSEMBLY FORWARD & TIGHTEN TO BODY.

NOTES:
1. UNLESS OTHERWISE SPECIFIED ALL DIMENSIONS ARE NOMINAL.
2. ALL SPECIFICATIONS ARE SUBJECT TO CHANGE WITHOUT NOTICE AT ANY TIME.
3. DIMENSIONS ARE IN INCHES [mm].
4. FITS MIL-C-17 AND EQUIVALENT CABLES.

DWG TITLE
PE4006

FSCM NO. 53919

CAD FILE 042109 | SCALE N/A | SIZE A | 127

PASTERNACK® THE ENGINEER'S RF SOURCE
Pasternack Enterprises, Inc.
P.O. Box 16759 | Irvine | CA | 92623
Phone: (949) 261-1920 | **Fax:** (949) 261-7451
Website: www.pasternack.com | **E-Mail:** sales@pasternack.com

© 2014 Pasternack Enterprises All Rights Reserved

PASTERNACK®
THE ENGINEER'S RF SOURCE

Formable 141 Semi-rigid Coax Cable with Tinned Copper Braid Outer Conductor

RF Cables Technical Data Sheet PE-SR402FL

Configuration

- Formable Cable
- 1 Shield(s)

Features

- Dimensionally the same as standard solid outer conductor semi-rigid coax
- Standard semi-rigid connectors can be used
- Cable is hand formable and does not require special tools to bend
- Connectors are easily soldered to Tin soaked outer conductor
- Cable can be formed more than once without damage to outer conductor
- High RF Shielding >100 dB

Description

Formable semi-rigid coax is a hand formable version of standard semi-rigid that does not require complicated and costly pre-formed cable assemblies. Because the dimensions and electrical characteristics are so closely matched to semi-rigid coax, standard semi-rigid connectors can be used. The tin soaked copper braid outer shield provides excellent RF shielding.

Electrical Specifications

Description	Minimum	Typical	Maximum	Units
Frequency Range	DC		20	GHz
Impedance		50		Ohms
Velocity of Propagation		69.5		%
Shielding Effectiveness	110			dB
Inner Conductor DC Resistance			7.8	Ohms/1000ft
Outer Conductor DC Resistance			5.5	Ohms/1000ft
Nominal Capacitance		29 [95.14]		pF/ft [pF/m]

Performance by Frequency Band

Description	F1	F2	F3	F4	F5	Units
Frequency	0.5	1	5	10	20	GHz
Attenuation, Typ	8	12	29	45	70	dB/100ft
	26.25	39.37	95.14	147.64	229.66	dB/100m

Mechanical Specifications

Min. Bend Radius (Repeated)	0.625 in [15.88 mm]

Click the following link (or enter part number in "SEARCH" on website) to obtain additional part information including price, inventory and certifications: Formable 141 Semi-rigid Coax Cable with Tinned Copper Braid Outer Conductor PE-SR402FL

Pasternack Enterprises, Inc. • P.O. Box 16759, Irvine, CA 92623
Phone: (866) 727-8376 or (949) 261-1920 • **Fax:** (949) 261-7451
Sales@Pasternack.com • Techsupport@Pasternack.com

© 2018 Pasternack Enterprises All Rights Reserved

Formable 141 Semi-rigid Coax Cable with Tinned Copper Braid Outer Conductor

Construction Specifications

Description	Material and Plating	Diameter
Inner Conductor	Copper, Silver, 1 Strands	0.037 in [0.94 mm]
Conductor Type	Solid	
Dielectric	PTFE	0.119 in [3.02 mm]
First Shield	Tinned Copper Braid 100% coverage	0.141 in [3.58 mm]

Environmental Specifications

Temperature

Operating Range -55 to +125 deg C

Compliance Certifications (see product page for current document)

Plotted and Other Data

Notes:

Formable 141 Semi-rigid Coax Cable with Tinned Copper Braid Outer Conductor from Pasternack Enterprises has same day shipment for domestic and International orders. Our RF, microwave and millimeter wave products maintain a 99.4% availability and are part of the broadest selection in the industry.

Click the following link (or enter part number in "SEARCH" on website) to obtain additional part information including price, inventory and certifications: Formable 141 Semi-rigid Coax Cable with Tinned Copper Braid Outer Conductor PE-SR402FL

URL: https://www.pasternack.com/formable-0.141-semirigid-replacement-50-ohm-coax-cable-tinned-braid-pe-sr402fl-p.aspx

The information contained in this document is accurate to the best of our knowledge and representative of the part described herein. It may be necessary to make modifications to the part and/or the documentation of the part, in order to implement improvements. Pasternack reserves the right to make such changes as required. Unless otherwise stated, all specifications are nominal. Pasternack does not make any representation or warranty regarding the suitability of the part described herein for any particular purpose, and Pasternack does not assume any liability arising out of the use of any part or documentation.

Pasternack Enterprises, Inc. • P.O. Box 16759, Irvine, CA 92623
Phone: (866) 727-8376 or (949) 261-1920 • **Fax:** (949) 261-7451
Sales@Pasternack.com • Techsupport@Pasternack.com

© 2018 Pasternack Enterprises All Rights Reserved

PE-SR402FL CAD Drawing

Formable 141 Semi-rigid Coax Cable with Tinned Copper Braid Outer Conductor

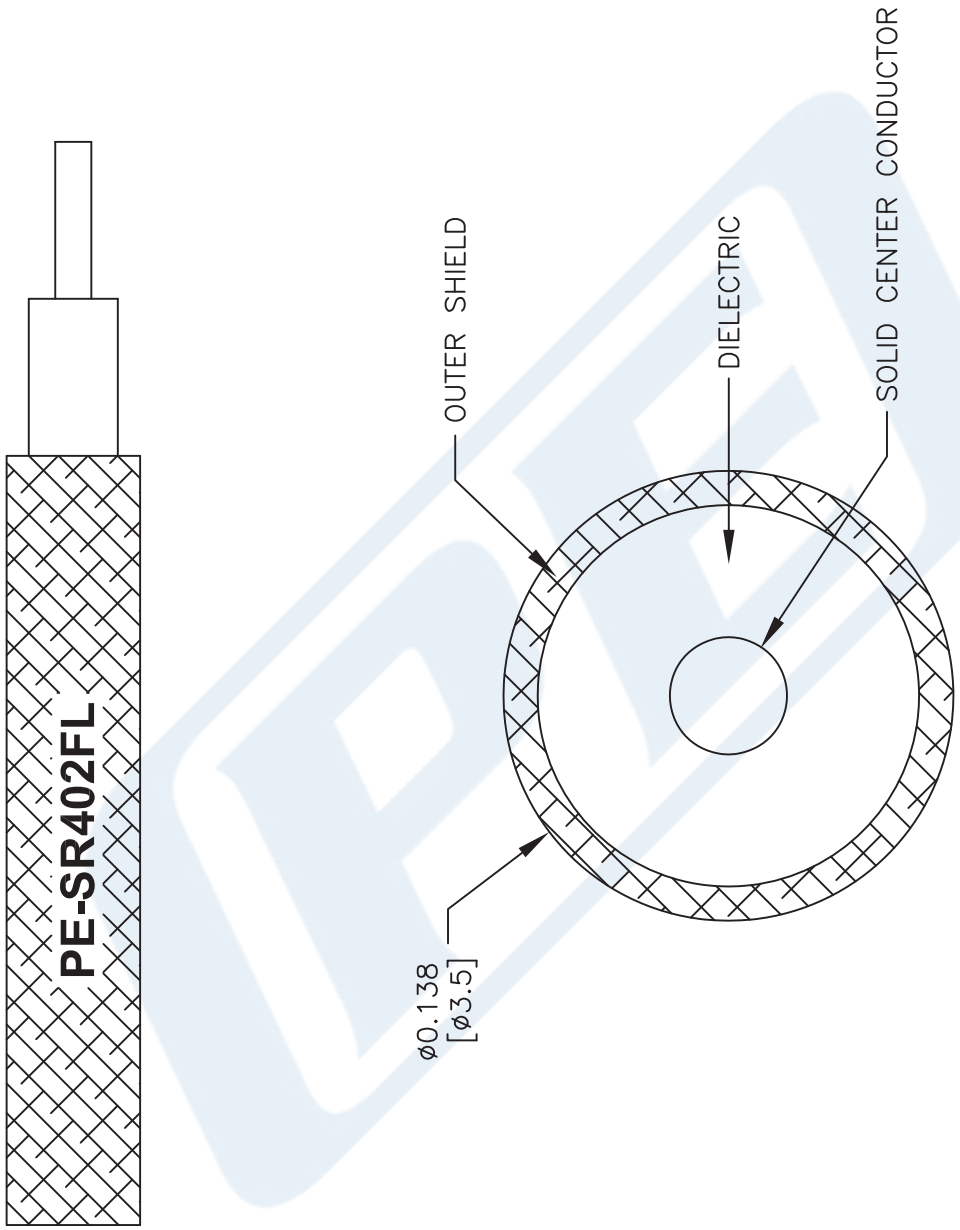

NOTES:
1. UNLESS OTHERWISE SPECIFIED ALL DIMENSIONS ARE NOMINAL.
2. ALL SPECIFICATIONS ARE SUBJECT TO CHANGE WITHOUT NOTICE AT ANY TIME.
3. DIMENSIONS ARE IN INCHES [mm].

DWG TITLE
PESR402FL

FSCM NO. 53919

CAD FILE 111716 | SCALE N/A | SIZE A | 41742

PASTERNACK®
THE ENGINEER'S RF SOURCE
Pasternack Enterprises, Inc.
P.O. Box 16759 | Irvine | CA | 92623
Phone: (949) 261-1920 | **Fax:** (949) 261-7451
Website: www.pasternack.com | **E-Mail:** sales@pasternack.com

© 2018 Pasternack Enterprises All Rights Reserved