PASTERNACK®
THE ENGINEER'S RF SOURCE

2.92mm Male Connector Solder Attachment for PE-SR402AL, PE-SR402FL, PE-SR402FLJ, PE-SR402TN, RG402

RF Connectors Technical Data Sheet PE4987

Configuration

- 2.92mm Male Connector
- 50 Ohms
- Straight Body Geometry
- PE-SR402AL, PE-SR402FL, PE-SR402FLJ, PE-SR402TN, RG402 Interface Type
- Solder Attachment
- 5/16 inch Hex

Features

- Gold over Nickel Plated Beryllium Copper Contact
- 50 µin minimum contact plating

Applications

- General Purpose Test
- Custom Cable Assemblies

Description

Pasternack's PE4987 2.92mm male connector with solder attachment for PE-SR402AL, PE-SR402FL, PE-SR402FLJ, PE-SR402TN and RG402 is part of our full line of RF components available for same-day shipping.

Our 2.92mm male connector PE4987 datasheet specifications and drawing with dimensions are shown below in this PDF. Pasternack's broad catalog of RF, microwave and millimeter wave connectors allows designers to configure and customize their signal connections however they like. Whether the need is to provide an I/O for a board design, or simply create a custom cable assembly configuration, Pasternack has the right connector for the job. Pasternack can also expertly build your custom cable assemblies for you and ship same-day.

Mechanical Specifications

Size

Length	0.37 in [9.4 mm]
Width/Dia.	0.312 in [7.92 mm]
Weight	0.006 lbs [2.72 g]
Mating Torque	8 to 10 in-lbs [0.90 to 1.13 Nm]

Material Specifications

Description	Material	Plating
Contact	Beryllium Copper	Gold over Nickel 50 µin minimum
Insulation	PCTFE	
Body	Stainless Steel	Gold over Nickel 50 µin minimum
Coupling Nut	Stainless Steel	Gold over Nickel 50 µin minimum

Click the following link (or enter part number in "SEARCH" on website) to obtain additional part information including price, inventory and certifications: 2.92mm Male Connector Solder Attachment for PE-SR402AL, PE-SR402FL, PE-SR402FLJ, PE-SR402TN, RG402 PE4987

Pasternack Enterprises, Inc. • P.O. Box 16759, Irvine, CA 92623
Phone: (866) 727-8376 or (949) 261-1920 • **Fax:** (949) 261-7451
Sales@Pasternack.com • Techsupport@Pasternack.com

© 2016 Pasternack Enterprises All Rights Reserved

2.92mm Male Connector Solder Attachment for PE-SR402AL, PE-SR402FL, PE-SR402FLJ, PE-SR402TN, RG402

Compliance Certifications (see product page for current document)

Plotted and Other Data

Notes:

2.92mm Male Connector Solder Attachment for PE-SR402AL, PE-SR402FL, PE-SR402FLJ, PE-SR402TN, RG402 from Pasternack Enterprises has same day shipment for domestic and International orders. Our RF, microwave and millimeter wave products maintain a 99% availability and are part of the broadest selection in the industry.

Click the following link (or enter part number in "SEARCH" on website) to obtain additional part information including price, inventory and certifications: 2.92mm Male Connector Solder Attachment for PE-SR402AL, PE-SR402FL, PE-SR402FLJ, PE-SR402TN, RG402 PE4987

URL: https://www.pasternack.com/2.92mm-male-standard-pe-sr402al-pe-sr402fl-rg402-connector-pe4987-p.aspx

The information contained in this document is accurate to the best of our knowledge and representative of the part described herein. It may be necessary to make modifications to the part and/or the documentation of the part, in order to implement improvements. Pasternack reserves the right to make such changes as required. Unless otherwise stated, all specifications are nominal. Pasternack does not make any representation or warranty regarding the suitability of the part described herein for any particular purpose, and Pasternack does not assume any liability arising out of the use of any part or documentation.

Pasternack Enterprises, Inc. • P.O. Box 16759, Irvine, CA 92623
Phone: (866) 727-8376 or (949) 261-1920 • **Fax:** (949) 261-7451
Sales@Pasternack.com • Techsupport@Pasternack.com

© 2016 Pasternack Enterprises All Rights Reserved

PE4987 CAD Drawing

2.92mm Male Connector Solder Attachment for PE-SR402AL, PE-SR402FL, PE-SR402FLJ, PE-SR402TN, RG402

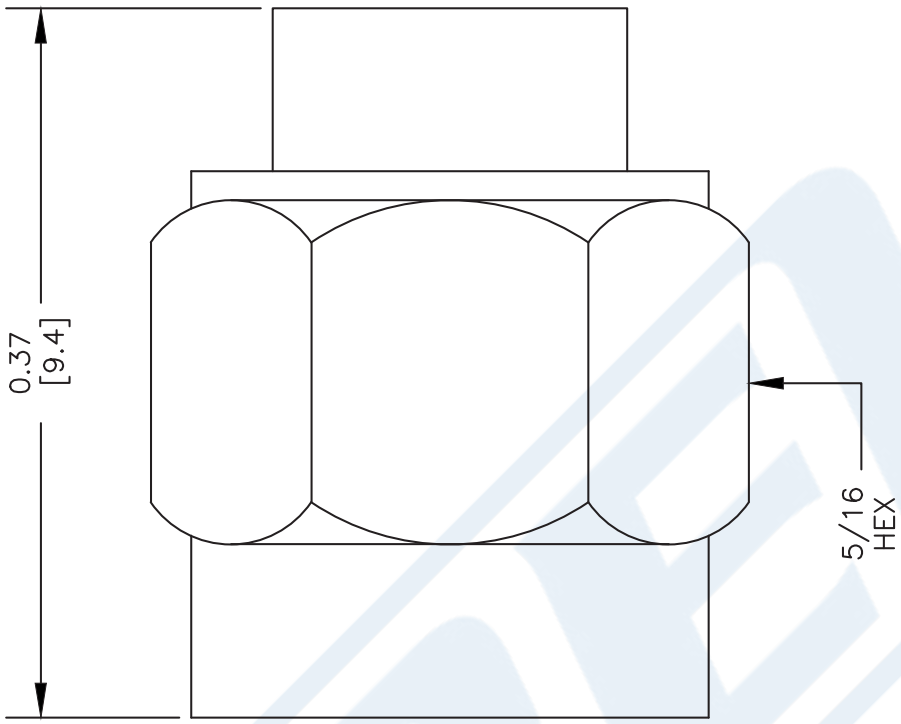

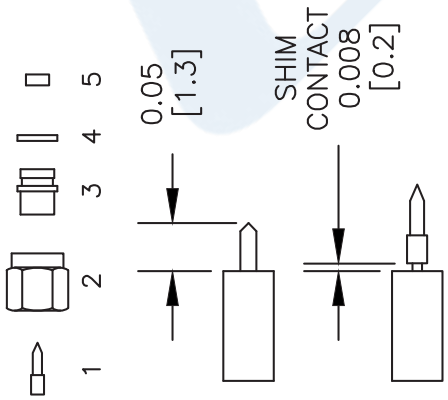

ASSEMBLY PROCEDURES

1. STRIP CABLE AS SHOWN. DO NOT NICK CENTER CONDUCTOR.
2. SOLDER CONTACT (1) TO CENTER CONDUCTOR. SLIDE COUPLING NUT (2) OVER CABLE. SLIDE BODY (3) OVER CONTACT UNTIL IT BOTTOMS OUT TO OUTER CONDUCTOR. SOLDER BODY (3) TO OUTER CONDUCTOR.
3. INSTALL GASKET (4) ONTO BODY (3). INSERT INSULATOR (5) INTO BODY (3) & SLIDE COUPLING NUT OVER ASSEMBLY.

NOTES:
1. UNLESS OTHERWISE SPECIFIED ALL DIMENSIONS ARE NOMINAL.
2. ALL SPECIFICATIONS ARE SUBJECT TO CHANGE WITHOUT NOTICE AT ANY TIME.
3. DIMENSIONS ARE IN INCHES [mm].
4. FITS MIL-C-17 AND EQUIVALENT CABLES.

DWG TITLE
PE4987

FSCM NO. 53919

CAD FILE 061702 | SCALE N/A | SIZE A | 127

PASTERNACK®
Pasternack Enterprises, Inc.
P.O. Box 16759 | Irvine | CA | 92623
Phone: (949) 261-1920 | **Fax:** (949) 261-7451
Website: www.pasternack.com | **E-Mail:** sales@pasternack.com

© 2016 Pasternack Enterprises All Rights Reserved

PASTERNACK®
THE ENGINEER'S RF SOURCE

BNC Male Connector Solder Attachment for PE-SR402AL, PE-SR402FL, PE-SR402FLJ, PE-SR402TN, RG402

Configuration

- BNC Male Connector
- MIL-STD-348A
- 50 Ohms
- Straight Body Geometry
- PE-SR402AL, PE-SR402FL, PE-SR402FLJ, PE-SR402TN, RG402 Interface Type
- Solder/Solder Attachment

Features

- Max. Operating Frequency 4 GHz
- Good VSWR of 1.3:1
- Gold Plated Brass Contact
- 30 µin minimum contact plating

Applications

- General Purpose Test
- Custom Cable Assemblies

Description

Pasternack's PE4650 BNC male connector with solder/solder attachment for PE-SR402AL, PE-SR402FL, PE-SR402FLJ, PE-SR402TN and RG402 is part of our full line of RF components available for same-day shipping. Our BNC male connector operates up to a maximum frequency of 4 GHz and offers good VSWR of 1.3:1.

Our BNC male connector PE4650 datasheet specifications and drawing with dimensions are shown below in this PDF. Pasternack's broad catalog of RF, microwave and millimeter wave connectors allows designers to configure and customize their signal connections however they like. Whether the need is to provide an I/O for a board design, or simply create a custom cable assembly configuration, Pasternack has the right connector for the job. Pasternack can also expertly build your custom cable assemblies for you and ship same-day.

Electrical Specifications

Description	Minimum	Typical	Maximum	Units
Frequency Range	DC		4	GHz
VSWR			1.3:1	
Operating Voltage (AC)			500	Vrms
Dielectric Withstanding Voltage (AC)			1,500	Vrms

Mechanical Specifications

Size

Length	0.76 in [19.3 mm]
Width/Dia.	0.571 in [14.50 mm]
Weight	0.028 lbs [12.7 g]

Click the following link (or enter part number in "SEARCH" on website) to obtain additional part information including price, inventory and certifications: BNC Male Connector Solder Attachment for PE-SR402AL, PE-SR402FL, PE-SR402FLJ, PE-SR402TN, RG402 PE4650

Pasternack Enterprises, Inc. • P.O. Box 16759, Irvine, CA 92623
Phone: (866) 727-8376 or (949) 261-1920 • **Fax:** (949) 261-7451
Sales@Pasternack.com • Techsupport@Pasternack.com

© 2016 Pasternack Enterprises All Rights Reserved

BNC Male Connector Solder Attachment for PE-SR402AL, PE-SR402FL, PE-SR402FLJ, PE-SR402TN, RG402

Material Specifications

Description	Material	Plating
Contact	Brass	Gold 30 µin minimum
Insulation	PTFE	
Body	Brass	Gold 3 µin minimum
Coupling Nut	Brass	Nickel 100 µin minimum

Environmental Specifications

Temperature

Operating Range -65 to +165 deg C

Compliance Certifications (see product page for current document)

Plotted and Other Data

Notes:

BNC Male Connector Solder Attachment for PE-SR402AL, PE-SR402FL, PE-SR402FLJ, PE-SR402TN, RG402 from Pasternack Enterprises has same day shipment for domestic and International orders. Our RF, microwave and millimeter wave products maintain a 99% availability and are part of the broadest selection in the industry.

Click the following link (or enter part number in "SEARCH" on website) to obtain additional part information including price, inventory and certifications: BNC Male Connector Solder Attachment for PE-SR402AL, PE-SR402FL, PE-SR402FLJ, PE-SR402TN, RG402 PE4650

URL: https://www.pasternack.com/bnc-male-standard-pe-sr402al-pe-sr402fl-rg402-connector-pe4650-p.aspx

The information contained in this document is accurate to the best of our knowledge and representative of the part described herein. It may be necessary to make modifications to the part and/or the documentation of the part, in order to implement improvements. Pasternack reserves the right to make such changes as required. Unless otherwise stated, all specifications are nominal. Pasternack does not make any representation or warranty regarding the suitability of the part described herein for any particular purpose, and Pasternack does not assume any liability arising out of the use of any part or documentation.

Pasternack Enterprises, Inc. • P.O. Box 16759, Irvine, CA 92623
Phone: (866) 727-8376 or (949) 261-1920 • **Fax:** (949) 261-7451
Sales@Pasternack.com • Techsupport@Pasternack.com

© 2016 Pasternack Enterprises All Rights Reserved

PE4650 CAD Drawing

BNC Male Connector Solder Attachment for PE-SR402AL, PE-SR402FL, PE-SR402FLJ, PE-SR402TN, RG402

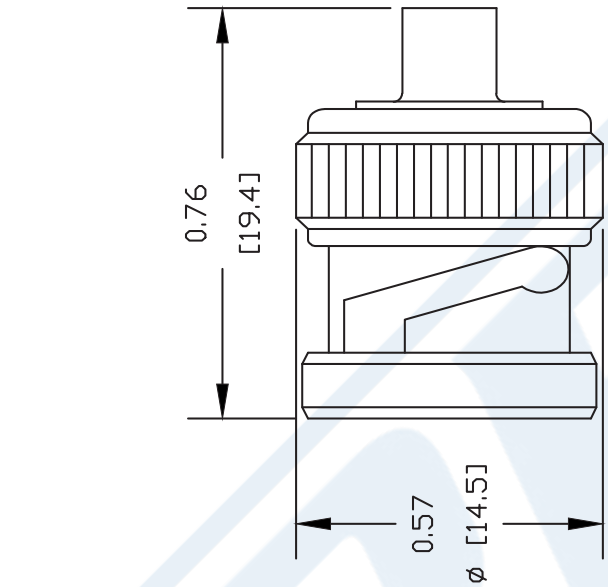

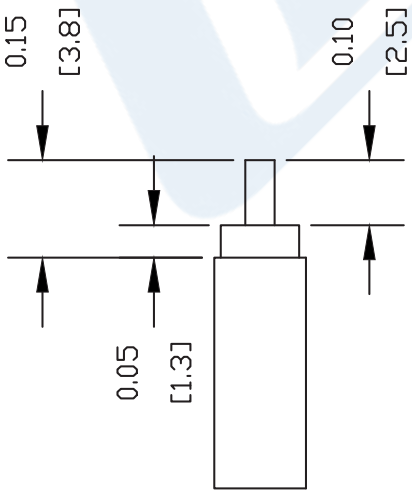

STRIPPING DIMENSIONS

ASSEMBLY PROCEDURES

1. STRIP CABLE AS SHOWN & TIN CENTER CONDUCTOR.
2. SOLDER CONTACT TO CENTER CONDUCTOR.
3. INSERT CABLE INTO BODY UNTIL OUTER CONDUCTOR BOTTOMS OUT WITH BODY SHOULDER. SOLDER OUTER CONDUCTOR TO BODY.

NOTES:
1. UNLESS OTHERWISE SPECIFIED ALL DIMENSIONS ARE NOMINAL.
2. ALL SPECIFICATIONS ARE SUBJECT TO CHANGE WITHOUT NOTICE AT ANY TIME.
3. DIMENSIONS ARE IN INCHES [mm].
4. FITS MIL-C-17 AND EQUIVALENT CABLES.

DWG TITLE PE4650

REV. - | FSCM NO. 53919 | CAD FILE 052902 | SCALE N/A | SIZE A | 127

PASTERNACK®
Pasternack Enterprises, Inc.
P.O. Box 16759 | Irvine | CA | 92623
Phone: (949) 261-1920 | **Fax:** (949) 261-7451
Website: www.pasternack.com | **E-Mail:** sales@pasternack.com

© 2016 Pasternack Enterprises All Rights Reserved

PASTERNACK®
www.pasternack.com

RG402 Coax Cable with Copper Outer Conductor

TECHNICAL DATA SHEET RG402/U

RG402 Coax Cable with Copper Outer Conductor

Configuration

Inner Conductor Material and Plating	Copper Clad Steel, Silver
Dielectric Type	PTFE
Shield Materials	Copper
Jacket Material and Color	Tan

Electrical Specifications

Impedance, Ohms	50
Maximum Operating Frequency, GHz	36
Capacitance, pF/ft [pF/m]	29.9 [98.1]
Dielectric Withstanding Voltage, Vrms	5,000

Electrical Specifications by Frequency

Frequency 1

Frequency, MHz	1000
Attenuation, dB/100ft [dB/100m]	12 [39.37]
Power Handling, Watts	450

Frequency 2

Frequency, GHz	10
Attenuation, dB/100ft [dB/100m]	45 [147.64]
Power Handling, Watts	120

Frequency 3

Frequency, GHz	20
Attenuation, dB/100ft [dB/100m]	70 [229.66]
Power Handling, Watts	70

Mechanical Specifications

Temperature

Operating Range, deg C	-55 to +125

Inner Conductor

Number of Strands	1
Material	Copper Clad Steel
Plating	Silver
Diameter, in [mm]	0.036 [0.91]

Dielectric:

Type	PTFE
Diameter, in [mm]	0.117 [2.97]

Click the following link (or enter part number in “SEARCH” on website) to obtain additional part information including price, inventory and certifications: RG402 Coax Cable with Copper Outer Conductor RG402/U

The information contained in this document is accurate to the best of our knowledge and representative of the part described herein. It may be necessary to make modifications to the part and/or the documentation of the part, in order to implement improvements. Pasternack reserves the right to make such changes as required. Unless otherwise stated, all specifications are nominal.

Pasternack Enterprises, Inc. • P.O. Box 16759, Irvine, CA 92623
Phone: (866) 727-8376 or (949) 261-1920 • **Fax:** (949) 261-7451
Sales@Pasternack.com • Techsupport@Pasternack.com

© 2013 Pasternack Enterprises All Rights Reserved

Shield:	
Number of	1
Material 1	Copper
Diameter, in [mm]	0.141 [3.58]
Jacket:	
Color	Tan
One Time Minimum Bend Radius, in [mm]	0.15 [3.81]
Weight, lbs/ft [Kg/m]	0.034 [0.05]

Compliance Certifications (visit www.Pasternack.com for current document)

RoHS Compliant	Yes

Plotted and Other Data

Notes:	Values at 25 °C, sea level

RG402 Coax Cable with Copper Outer Conductor from Pasternack Enterprises has same day shipment for domestic and International orders. Our RF, microwave and fiber optic products maintain a 99% availability and are part of the broadest selection in the industry.

Click the following link (or enter part number in “SEARCH” on website) to obtain additional part information including price, inventory and certifications: RG402 Coax Cable with Copper Outer Conductor RG402/U

URL: http://www.pasternack.com/semirigid-0.141-rg402-50-ohm-coax-cable-copper-rg402-u-p.aspx

The information contained in this document is accurate to the best of our knowledge and representative of the part described herein. It may be necessary to make modifications to the part and/or the documentation of the part, in order to implement improvements. Pasternack reserves the right to make such changes as required. Unless otherwise stated, all specifications are nominal.

Pasternack Enterprises, Inc. • P.O. Box 16759, Irvine, CA 92623
Phone: (866) 727-8376 or (949) 261-1920 • **Fax:** (949) 261-7451
Sales@Pasternack.com • Techsupport@Pasternack.com

© 2013 Pasternack Enterprises All Rights Reserved

RG402/U CAD Drawing

RG402 Coax Cable with Copper Outer Conductor

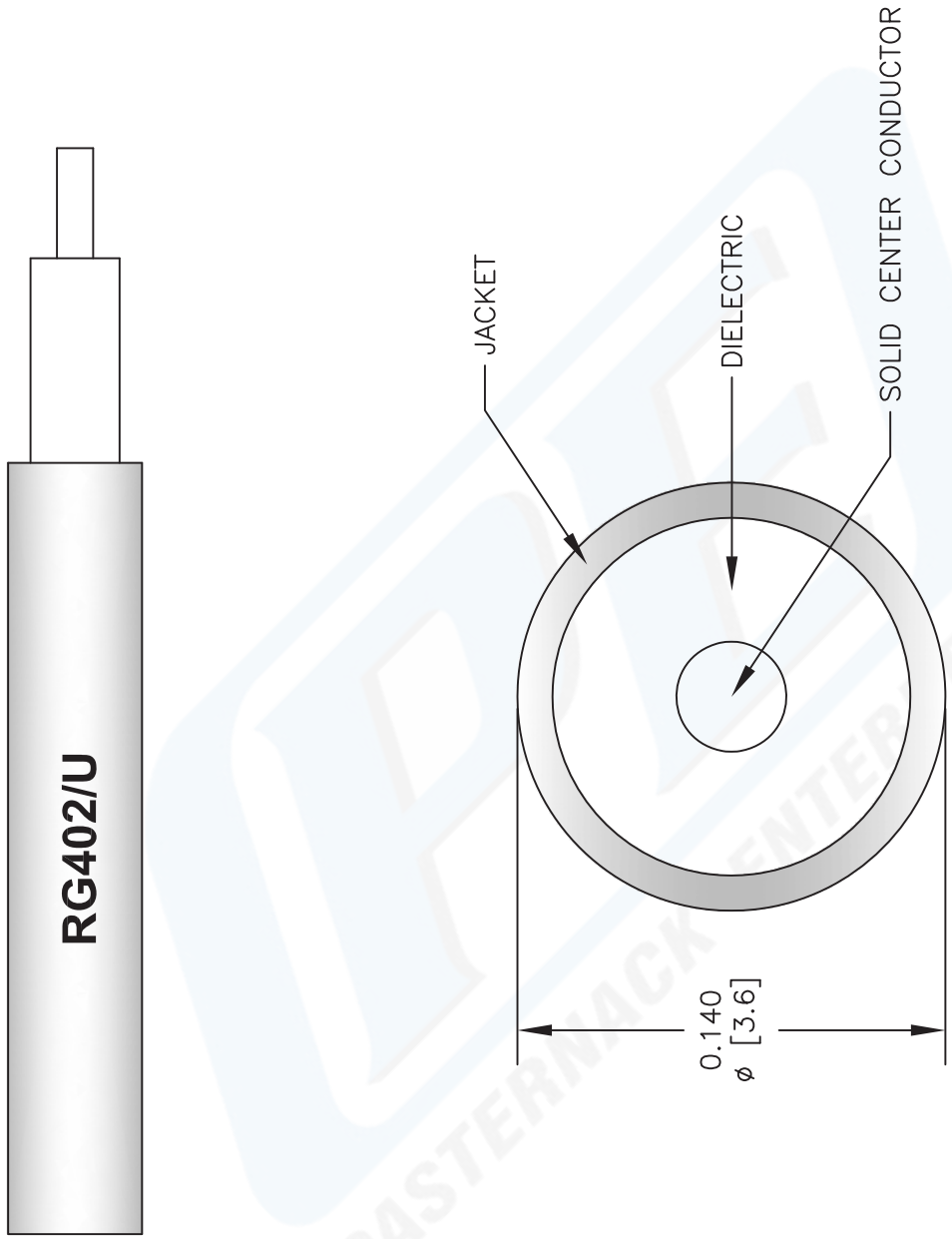

NOTES:
1. UNLESS OTHERWISE SPECIFIED ALL DIMENSIONS ARE NOMINAL.
2. ALL SPECIFICATIONS ARE SUBJECT TO CHANGE WITHOUT NOTICE AT ANY TIME.
3. DIMENSIONS ARE IN INCHES [mm].

DWG TITLE
RG402/U

FSCM NO. 53919

CAD FILE 050212-B | SCALE N/A | SIZE A | 2233

PASTERNACK®
Pasternack Enterprises, Inc.
P.O. Box 16759 | Irvine | CA | 92623
Phone: (949) 261-1920 | **Fax:** (949) 261-7451
Website: www.pasternack.com | **E-Mail:** sales@pasternack.com

© 2013 Pasternack Enterprises All Rights Reserved