3.5mm Male Connector Clamp/Solder Attachment for PE-SR405AL, PE-SR405FL, PE-SR405FLJ, PE-SR405TN, RG405

RF Connectors Technical Data Sheet PE4982

Configuration

- 3.5mm Male Connector
- 50 Ohms
- Straight Body Geometry
- PE-SR405AL, PE-SR405FL, PE-SR405FLJ, PE-SR405TN, RG405 Interface Type
- Clamp/Solder Attachment
- 5/16 inch Hex

Features

- Gold over Nickel Plated Beryllium Copper Contact
- 50 µin minimum contact plating

Applications

- General Purpose Test
- Custom Cable Assemblies

Description

Pasternack's PE4982 3.5mm male connector with clamp/solder attachment for PE-SR405AL, PE-SR405FL, PE-SR405FLJ, PE-SR405TN and RG405 is part of our full line of RF components available for same-day shipping.

Our 3.5mm male connector PE4982 datasheet specifications and drawing with dimensions are shown below in this PDF. Pasternack's broad catalog of RF, microwave and millimeter wave connectors allows designers to configure and customize their signal connections however they like. Whether the need is to provide an I/O for a board design, or simply create a custom cable assembly configuration, Pasternack has the right connector for the job. Pasternack can also expertly build your custom cable assemblies for you and ship same-day.

Mechanical Specifications

Size

Length	0.94 in [23.88 mm]
Width/Dia.	0.312 in [7.92 mm]
Weight	0.016 lbs [7.26 g]
Mating Torque	8 to 10 in-lbs [0.90 to 1.13 Nm]

Material Specifications

Description	Material	Plating
Contact	Beryllium Copper	Gold over Nickel 50 µin minimum
Insulation	PCTFE	
Body	Passivated Stainless Steel	SAE-AMS-2700
Coupling Nut	Passivated Stainless Steel	SAE-AMS-2700

Click the following link (or enter part number in "SEARCH" on website) to obtain additional part information including price, inventory and certifications: 3.5mm Male Connector Clamp/Solder Attachment for PE-SR405AL, PE-SR405FL, PE-SR-405FLJ, PE-SR405TN, RG405 PE4982

Pasternack Enterprises, Inc. • P.O. Box 16759, Irvine, CA 92623
Phone: (866) 727-8376 or (949) 261-1920 • **Fax:** (949) 261-7451
Sales@Pasternack.com • Techsupport@Pasternack.com

© 2016 Pasternack Enterprises All Rights Reserved

3.5mm Male Connector Clamp/Solder Attachment for PE-SR405AL, PE-SR405FL, PE-SR405FLJ, PE-SR405TN, RG405

Compliance Certifications (see product page for current document)

Plotted and Other Data

Notes:

3.5mm Male Connector Clamp/Solder Attachment for PE-SR405AL, PE-SR405FL, PE-SR405FLJ, PE-SR405TN, RG405 from Pasternack Enterprises has same day shipment for domestic and International orders. Our RF, microwave and millimeter wave products maintain a 99% availability and are part of the broadest selection in the industry.

Click the following link (or enter part number in "SEARCH" on website) to obtain additional part information including price, inventory and certifications: 3.5mm Male Connector Clamp/Solder Attachment for PE-SR405AL, PE-SR405FL, PE-SR405FLJ, PE-SR405TN, RG405 PE4982

URL: https://www.pasternack.com/3.5mm-male-standard-pe-sr405al-pe-sr405fl-rg405-connector-pe4982-p.aspx

The information contained in this document is accurate to the best of our knowledge and representative of the part described herein. It may be necessary to make modifications to the part and/or the documentation of the part, in order to implement improvements. Pasternack reserves the right to make such changes as required. Unless otherwise stated, all specifications are nominal. Pasternack does not make any representation or warranty regarding the suitability of the part described herein for any particular purpose, and Pasternack does not assume any liability arising out of the use of any part or documentation.

Pasternack Enterprises, Inc. • P.O. Box 16759, Irvine, CA 92623
Phone: (866) 727-8376 or (949) 261-1920 • **Fax:** (949) 261-7451
Sales@Pasternack.com • Techsupport@Pasternack.com

© 2016 Pasternack Enterprises All Rights Reserved

PE4982 CAD Drawing

3.5mm Male Connector Clamp/Solder Attachment for PE-SR405AL, PE-SR405FL, PE-SR405FLJ, PE-SR405TN, RG405

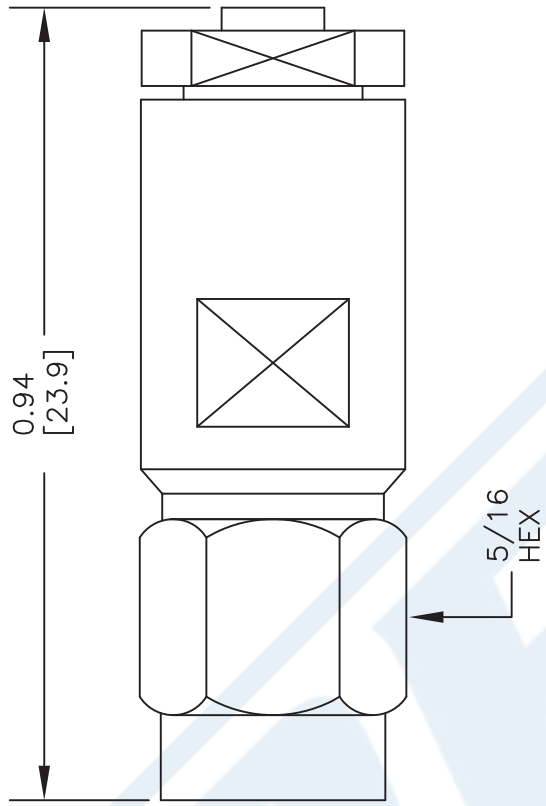

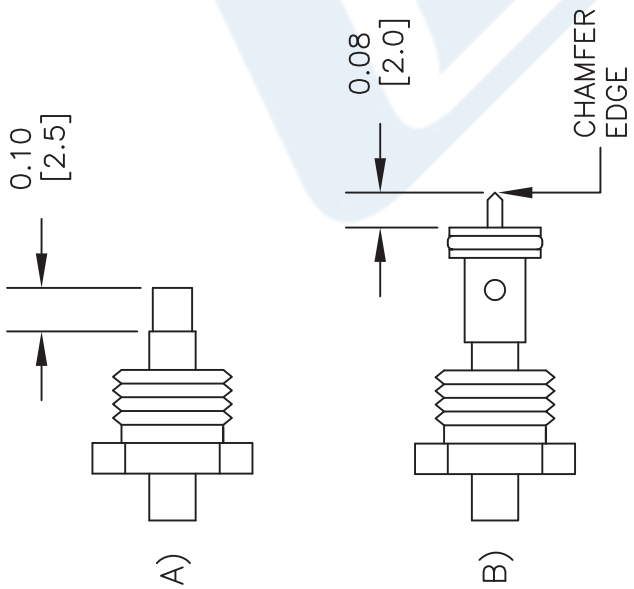

ASSEMBLY PROCEDURES

1. SLIDE CLAMP NUT OVER CABLE. STRIP CABLE AS SHOWN IN (A). DO NOT NICK DIELECTRIC.
2. INSERT CABLE THRU ADAPTER UNTIL IT BOTTOMS OUT. SOLDER OUTER CONDUCTOR TO ADAPTER & TRIM DIELECTRIC AS SHOWN IN (B).
3. SCREW ASSEMBLY INTO BODY & TIGHTEN NUT.

NOTES:
1. UNLESS OTHERWISE SPECIFIED ALL DIMENSIONS ARE NOMINAL.
2. ALL SPECIFICATIONS ARE SUBJECT TO CHANGE WITHOUT NOTICE AT ANY TIME.
3. DIMENSIONS ARE IN INCHES [mm].
4. FITS MIL-C-17 AND EQUIVALENT CABLES.

DWG TITLE
PE4982

FSCM NO. 53919

CAD FILE 100812-B | SCALE N/A | SIZE A | 2233

PASTERNACK®
Pasternack Enterprises, Inc.
P.O. Box 16759 | Irvine | CA | 92623
Phone: (949) 261-1920 | **Fax:** (949) 261-7451
Website: www.pasternack.com | **E-Mail:** sales@pasternack.com

© 2016 Pasternack Enterprises All Rights Reserved

MMCX Plug Connector Solder Attachment for PE-SR405AL, PE-SR405FL, PE-SR405FLJ, PE-SR405TN, RG405

RF Connectors Technical Data Sheet PE44453

Configuration

- MMCX Plug Connector
- 50 Ohms
- Straight Body Geometry
- PE-SR405AL, PE-SR405FL, PE-SR405FLJ, PE-SR405TN, RG405 Interface Type
- Solder Attachment

Features

- Max. Operating Frequency 6 GHz
- Gold Plated Brass Contact

Applications

- General Purpose Test
- Custom Cable Assemblies

Description

Pasternack's PE44453 MMCX plug connector with solder attachment for PE-SR405AL, PE-SR405FL, PE-SR405FLJ, PE-SR405TN and RG405 is part of our full line of RF components available for same-day shipping. Our MMCX plug connector operates up to a maximum frequency of 6 GHz.

Our MMCX plug connector PE44453 datasheet specifications and drawing with dimensions are shown below in this PDF. Pasternack's broad catalog of RF, microwave and millimeter wave connectors allows designers to configure and customize their signal connections however they like. Whether the need is to provide an I/O for a board design, or simply create a custom cable assembly configuration, Pasternack has the right connector for the job. Pasternack can also expertly build your custom cable assemblies for you and ship same-day.

Electrical Specifications

Description	Minimum	Typical	Maximum	Units
Frequency Range	DC		6	GHz

Mechanical Specifications

Size	
Length	0.488 in [12.4 mm]
Width/Dia.	0.16 in [4.06 mm]
Weight	0.003 lbs [1.36 g]

Click the following link (or enter part number in "SEARCH" on website) to obtain additional part information including price, inventory and certifications: MMCX Plug Connector Solder Attachment for PE-SR405AL, PE-SR405FL, PE-SR405FLJ, PE-SR405TN, RG405 PE44453

Pasternack Enterprises, Inc. • P.O. Box 16759, Irvine, CA 92623
Phone: (866) 727-8376 or (949) 261-1920 • **Fax:** (949) 261-7451
Sales@Pasternack.com • Techsupport@Pasternack.com

© 2016 Pasternack Enterprises All Rights Reserved

MMCX Plug Connector Solder Attachment for PE-SR405AL, PE-SR405FL, PE-SR405FLJ, PE-SR405TN, RG405

Material Specifications

Description	Material	Plating
Contact	Brass	Gold
Insulation	PTFE	
Body	Brass	Gold

Environmental Specifications

Temperature

Operating Range -65 to +165 deg C

Compliance Certifications (see product page for current document)

Plotted and Other Data

Notes:

MMCX Plug Connector Solder Attachment for PE-SR405AL, PE-SR405FL, PE-SR405FLJ, PE-SR405TN, RG405 from Pasternack Enterprises has same day shipment for domestic and International orders. Our RF, microwave and millimeter wave products maintain a 99% availability and are part of the broadest selection in the industry.

Click the following link (or enter part number in "SEARCH" on website) to obtain additional part information including price, inventory and certifications: MMCX Plug Connector Solder Attachment for PE-SR405AL, PE-SR405FL, PE-SR405FLJ, PE-SR405TN, RG405 PE44453

URL: https://www.pasternack.com/mmcx-plug-standard-pe-sr405al-pe-sr405fl-rg405-connector-pe44453-p.aspx

The information contained in this document is accurate to the best of our knowledge and representative of the part described herein. It may be necessary to make modifications to the part and/or the documentation of the part, in order to implement improvements. Pasternack reserves the right to make such changes as required. Unless otherwise stated, all specifications are nominal. Pasternack does not make any representation or warranty regarding the suitability of the part described herein for any particular purpose, and Pasternack does not assume any liability arising out of the use of any part or documentation.

Pasternack Enterprises, Inc. • P.O. Box 16759, Irvine, CA 92623
Phone: (866) 727-8376 or (949) 261-1920 • **Fax:** (949) 261-7451
Sales@Pasternack.com • Techsupport@Pasternack.com

© 2016 Pasternack Enterprises All Rights Reserved

PE44453 CAD Drawing

MMCX Plug Connector Solder Attachment for PE-SR405AL, PE-SR405FL, PE-SR405FLJ, PE-SR405TN, RG405

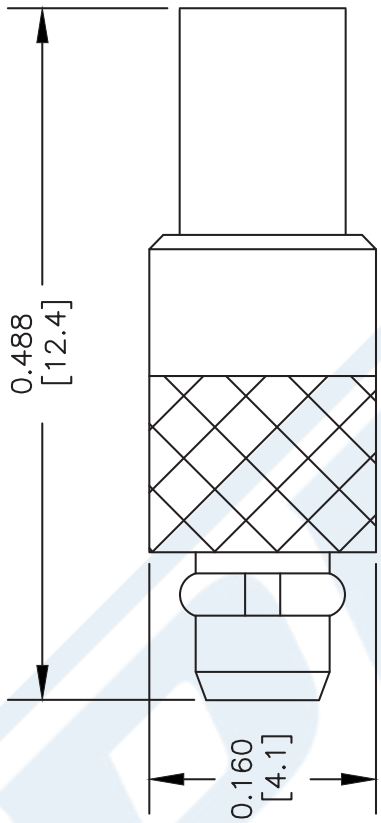

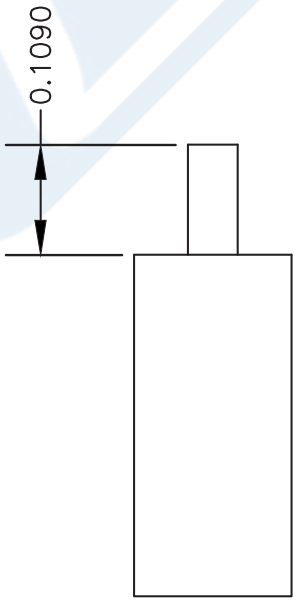

ASSEMBLY PROCEDURES

1. STRIP CABLE AS SHOWN & TIN CENTER CONDUCTOR. DO NOT NICK CENTER CONDUCTOR.
2. SOLDER CONTACT TO CENTER CONDUCTOR.
3. INSERT CABLE INTO BODY UNTIL IT BOTTOMS OUT. SOLDER OUTER CONDUCTOR TO BODY.

NOTES:
1. UNLESS OTHERWISE SPECIFIED ALL DIMENSIONS ARE NOMINAL.
2. ALL SPECIFICATIONS ARE SUBJECT TO CHANGE WITHOUT NOTICE AT ANY TIME.
3. DIMENSIONS ARE IN INCHES [mm].
4. FITS MIL-C-17 AND EQUIVALENT CABLES.

DWG TITLE
PE44453

FSCM NO. 53919

CAD FILE 080604-A | SCALE N/A | SIZE A | XXXX

PASTERNACK®
Pasternack Enterprises, Inc.
P.O. Box 16759 | Irvine | CA | 92623
Phone: (949) 261-1920 | **Fax:** (949) 261-7451
Website: www.pasternack.com | **E-Mail:** sales@pasternack.com

© 2016 Pasternack Enterprises All Rights Reserved

PASTERNACK®
www.pasternack.com

086 Semi-rigid Coax Cable with Copper Outer Conductor

TECHNICAL DATA SHEET RG405/U

086 Semi-rigid Coax Cable with Copper Outer Conductor

Configuration

Inner Conductor Material and Plating	Copper Clad Steel, Silver
Dielectric Type	PTFE
Shield Materials	Copper
Jacket Material and Color	Tan

Electrical Specifications

Impedance, Ohms	50
Maximum Operating Frequency, GHz	40
Dielectric Withstanding Voltage, Vrms	5,000

Electrical Specifications by Frequency

Frequency 1

Frequency, MHz	1000
Attenuation, dB/100ft [dB/100m]	22 [72.18]
Power Handling, Watts	130

Frequency 2

Frequency, GHz	10
Attenuation, dB/100ft [dB/100m]	80 [262.47]
Power Handling, Watts	35

Frequency 3

Frequency, GHz	20
Attenuation, dB/100ft [dB/100m]	120 [393.7]
Power Handling, Watts	20

Mechanical Specifications

Temperature

Operating Range, deg C	-55 to +125

Inner Conductor

Number of Strands	1
Material	Copper Clad Steel
Plating	Silver
Diameter, in [mm]	0.02 [0.51]

Dielectric:

Type	PTFE
Diameter, in [mm]	0.066 [1.68]

Click the following link (or enter part number in “SEARCH” on website) to obtain additional part information including price, inventory and certifications: 086 Semi-rigid Coax Cable with Copper Outer Conductor RG405/U

The information contained in this document is accurate to the best of our knowledge and representative of the part described herein. It may be necessary to make modifications to the part and/or the documentation of the part, in order to implement improvements. Pasternack reserves the right to make such changes as required. Unless otherwise stated, all specifications are nominal.

Pasternack Enterprises, Inc. • P.O. Box 16759, Irvine, CA 92623
Phone: (866) 727-8376 or (949) 261-1920 • **Fax:** (949) 261-7451
Sales@Pasternack.com • Techsupport@Pasternack.com

© 2013 Pasternack Enterprises All Rights Reserved

Shield:

Number of	1
Material 1	Copper
Diameter, in [mm]	0.087 [2.21]

Jacket:

Color	Tan
One Time Minimum Bend Radius, in [mm]	0.05 [1.27]
Weight, lbs/ft [Kg/m]	0.015 [0.02]

Compliance Certifications (visit www.Pasternack.com for current document)

RoHS Compliant	Yes

Plotted and Other Data

Notes:	Values at 25 °C, sea level

086 Semi-rigid Coax Cable with Copper Outer Conductor from Pasternack Enterprises has same day shipment for domestic and International orders. Our RF, microwave and fiber optic products maintain a 99% availability and are part of the broadest selection in the industry.

Click the following link (or enter part number in “SEARCH” on website) to obtain additional part information including price, inventory and certifications: 086 Semi-rigid Coax Cable with Copper Outer Conductor RG405/U

URL: http://www.pasternack.com/semirigid-0.085-rg405-50-ohm-coax-cable-copper-rg405-u-p.aspx

The information contained in this document is accurate to the best of our knowledge and representative of the part described herein. It may be necessary to make modifications to the part and/or the documentation of the part, in order to implement improvements. Pasternack reserves the right to make such changes as required. Unless otherwise stated, all specifications are nominal.

Pasternack Enterprises, Inc. • P.O. Box 16759, Irvine, CA 92623
Phone: (866) 727-8376 or (949) 261-1920 • **Fax:** (949) 261-7451
Sales@Pasternack.com • Techsupport@Pasternack.com

© 2013 Pasternack Enterprises All Rights Reserved

RG405/U CAD Drawing

086 Semi-rigid Coax Cable with Copper Outer Conductor

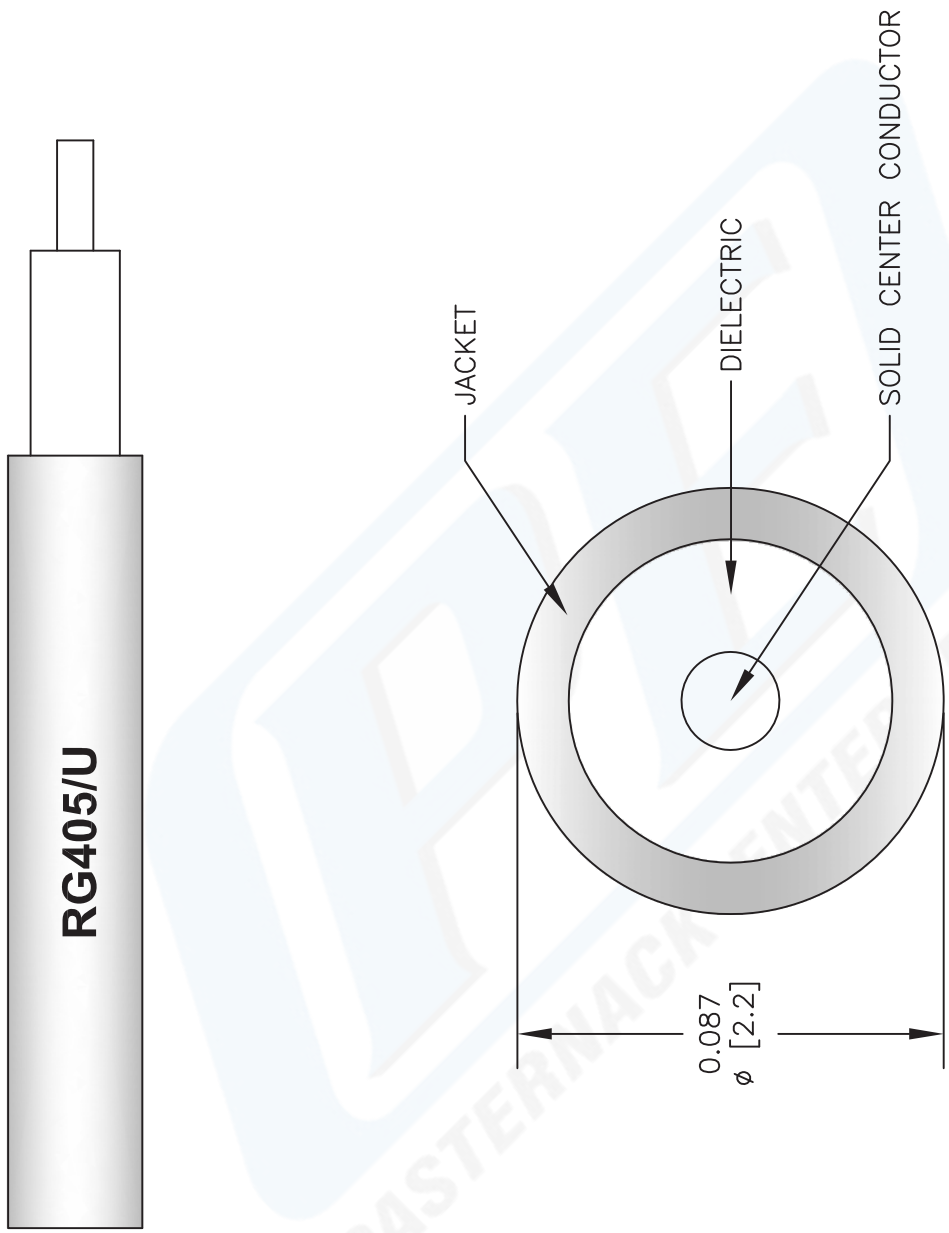

NOTES:
1. UNLESS OTHERWISE SPECIFIED ALL DIMENSIONS ARE NOMINAL.
2. ALL SPECIFICATIONS ARE SUBJECT TO CHANGE WITHOUT NOTICE AT ANY TIME.
3. DIMENSIONS ARE IN INCHES [mm].

DWG TITLE
RG405/U

FSCM NO. 53919

CAD FILE 022908 | SCALE N/A | SIZE A | 2233

PASTERNACK®
Pasternack Enterprises, Inc.
P.O. Box 16759 | Irvine | CA | 92623
Phone: (949) 261-1920 | **Fax:** (949) 261-7451
Website: www.pasternack.com | **E-Mail:** sales@pasternack.com

© 2013 Pasternack Enterprises All Rights Reserved