PASTERNACK®
THE ENGINEER'S RF SOURCE

SMA Male QD Connector Crimp/Solder Attachment For RG142, RG223, RG400, RG55

Configuration

- SMA Male Connector
- 50 Ohms
- Straight Body Geometry
- RG142, RG223, RG400, RG55 Interface Type
- Crimp/Solder Attachment

Electrical Specifications

Description	Minimum	Typical	Maximum	Units
Frequency Range	DC		12.4	GHz
VSWR			1.27:1	
Operating Voltage (AC)			335	Vrms
Dielectric Withstanding Voltage (AC)			1,000	

Mechanical Specifications

Size

Length	1.12 in [28.45 mm]
Width/Dia.	0.51 in [12.95 mm]
Weight	0.018 lbs [8.16 g]

Material Specifications

Description	Material	Plating
Contact	Beryllium Copper	Gold 50µ in. minimum
Insulation	Teflon	
Body	Brass	Gold 10µ in. minimum
Coupling Nut	Brass	Nickel 100µ in. minimum

Compliance Certifications (visit www.Pasternack.com for current document)

Not RoHS Compliant

Click the following link (or enter part number in "SEARCH" on website) to obtain additional part information including price, inventory and certifications: SMA Male QD Connector Crimp/Solder Attachment For RG142, RG223, RG400, RG55 PE44461

Pasternack Enterprises, Inc. • P.O. Box 16759, Irvine, CA 92623
Phone: (866) 727-8376 or (949) 261-1920 • **Fax:** (949) 261-7451
Sales@Pasternack.com • Techsupport@Pasternack.com

© 2015 Pasternack Enterprises All Rights Reserved

SMA Male QD Connector Crimp/Solder Attachment For RG142, RG223, RG400, RG55

Plotted and Other Data

Notes:

SMA Male QD Connector Crimp/Solder Attachment For RG142, RG223, RG400, RG55 from Pasternack Enterprises has same day shipment for domestic and International orders. Our RF, microwave and millimeter wave products maintain a 99% availability and are part of the broadest selection in the industry.

Click the following link (or enter part number in "SEARCH" on website) to obtain additional part information including price, inventory and certifications: SMA Male QD Connector Crimp/Solder Attachment For RG142, RG223, RG400, RG55 PE44461

URL: http://www.pasternack.com/sma-male-quick-disconnect-for-rg223u-pe44461-p.aspx

The information contained in this document is accurate to the best of our knowledge and representative of the part described herein. It may be necessary to make modifications to the part and/or the documentation of the part, in order to implement improvements. Pasternack reserves the right to make such changes as required. Unless otherwise stated, all specifications are nominal. Pasternack does not make any representation or warranty regarding the suitability of the part described herein for any particular purpose, and Pasternack does not assume any liability arising out of the use of any part or documentation.

Pasternack Enterprises, Inc. • P.O. Box 16759, Irvine, CA 92623
Phone: (866) 727-8376 or (949) 261-1920 • **Fax:** (949) 261-7451
Sales@Pasternack.com • Techsupport@Pasternack.com

© 2015 Pasternack Enterprises All Rights Reserved

PE44461 CAD Drawing

SMA Male QD Connector Crimp/Solder Attachment For RG142, RG223, RG400, RG55

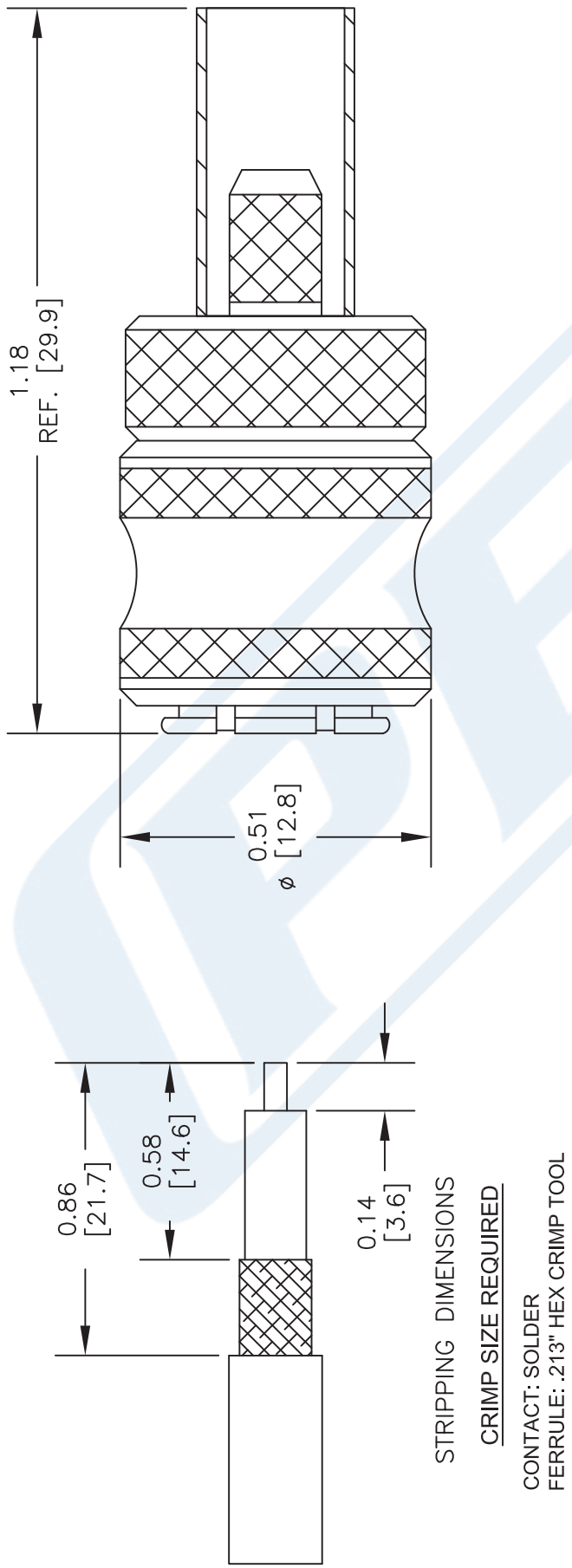

NOTES:
1. UNLESS OTHERWISE SPECIFIED ALL DIMENSIONS ARE NOMINAL.
2. ALL SPECIFICATIONS ARE SUBJECT TO CHANGE WITHOUT NOTICE AT ANY TIME.
3. DIMENSIONS ARE IN INCHES [mm].
4. FITS MIL-C-17 AND EQUIVALENT CABLES.

DWG TITLE
PE44461

CAD FILE	050613	SCALE N/A	SIZE A	2233

FSCM NO. 53919

PASTERNACK®
Pasternack Enterprises, Inc.
P.O. Box 16759 | Irvine | CA | 92623
Phone: (949) 261-1920 | **Fax:** (949) 261-7451
Website: www.pasternack.com | **E-Mail:** sales@pasternack.com

© 2015 Pasternack Enterprises All Rights Reserved

MATERIALS	
BODY	BRASS NICKEL PLATED
CONTACT	GOLD PLATED
INSULATOR	PTFE

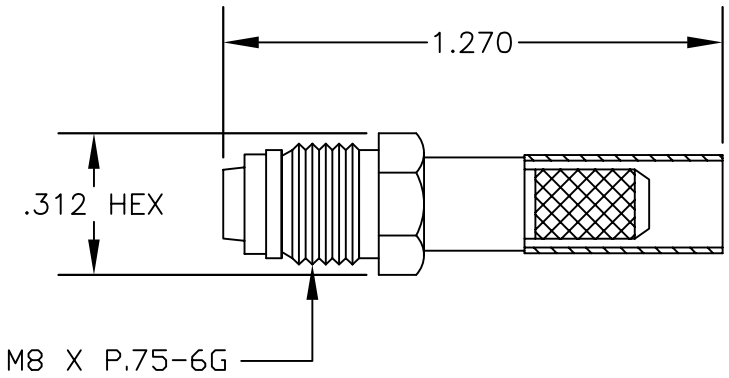

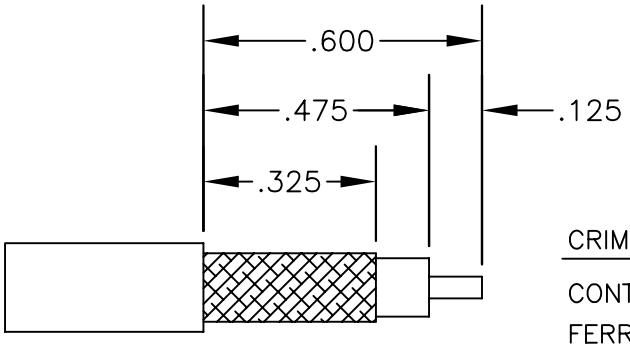

STRIPPING DIMENSIONS

CRIMP SIZES REQUIRED

CONTACT: .068" HEX CRIMP TOOL

FERRULE: .213" HEX CRIMP TOOL

PASTERNACK ENTERPRISES®
ESTABLISHED 1972

PASTERNACK ENTERPRISES, INC.
P.O BOX 16759, IRVINE, CA 92623
PHONE (949) 261-1920 FAX (949) 261-7451

WEB ADDRESS: www.pasternack.com
E-MAIL ADDRESS: sales@pasternack.com

COAXIAL & FIBER OPTICS

DWG TITLE	DES.
PE44147	FME JACK, CRIMP ATTACHMENT FOR RG55, RG142, RG223 & RG400

SIZE A	FSCM NO. 53919	CAD FILE 062702	SCALE N/A		127

NOTES:
1. UNLESS OTHERWISE SPECIFIED ALL DIMENSIONS ARE NOMINAL.
2. ALL SPECIFICATIONS ARE SUBJECT TO CHANGE WITHOUT NOTICE AT ANY TIME.

PASTERNACK®
THE ENGINEER'S RF SOURCE

Flexible RG223 Coax Cable Double Shielded with Black PVC Jacket

TECHNICAL DATA SHEET RG223/U

Configuration

Inner Conductor Material and Plating	Copper, Silver
Dielectric Type	PE
Shield Materials	Silver Plated Copper Braid, Silver Plated Copper Braid
Jacket Material and Color	PVC, Black

Electrical Specifications

Impedance, Ohms	50
Velocity of Propagation, %	66
Maximum Operating Frequency, GHz	12.4
Capacitance, pF/ft [pF/m]	30.8 [101.05]
Maximum Operating Voltage, Volts	1,900

Electrical Specifications by Frequency

Frequency 1	
Frequency, MHz	100
Attenuation, dB/100ft [dB/100m]	4 [13.12]
Frequency 2	
Frequency, MHz	400
Attenuation, dB/100ft [dB/100m]	8.2 [26.9]
Frequency 3	
Frequency, MHz	1000
Attenuation, dB/100ft [dB/100m]	13.4 [43.96]
Frequency 4	
Frequency, GHz	3
Attenuation, dB/100ft [dB/100m]	24.8 [81.36]
Frequency 5	
Frequency, GHz	5
Attenuation, dB/100ft [dB/100m]	33.5 [109.91]
Frequency 6	
Frequency, GHz	11
Attenuation, dB/100ft [dB/100m]	54.1 [177.49]

Mechanical Specifications

Temperature	
Operating Range, deg C	-20 to +80

Click the following link (or enter part number in "SEARCH" on website) to obtain additional part information including price, inventory and certifications: Flexible RG223 Coax Cable Double Shielded with Black PVC Jacket RG223/U

Pasternack Enterprises, Inc. • P.O. Box 16759, Irvine, CA 92623
Phone: (866) 727-8376 or (949) 261-1920 • **Fax:** (949) 261-7451
Sales@Pasternack.com • Techsupport@Pasternack.com

© 2014 Pasternack Enterprises All Rights Reserved

Flexible RG223 Coax Cable Double Shielded with Black PVC Jacket

TECHNICAL DATA SHEET RG223/U

Inner Conductor	
Number of Strands	1
Material	Copper
Plating	Silver
Diameter, in [mm]	0.035 [0.89]
Dielectric:	
Type	PE
Diameter, in [mm]	0.116 [2.95]
Shield:	
Number of	2
Material 1	Silver Plated Copper Braid
Material 2	Silver Plated Copper Braid
Diameter, in [mm]	0.156 [3.96]
Jacket:	
Material	PVC
Diameter, in [mm]	0.21 [5.33]
Color	Black
One Time Minimum Bend Radius, in [mm]	0.21 [5.33]
Repeated Minimum Bend Radius, in [mm]	1 [25.4]
Weight, lbs/ft [Kg/m]	0.038 [0.06]

Compliance Certifications (visit www.Pasternack.com for current document)

RoHS Compliant	
REACH Compliant	06/18/2012

Plotted and Other Data

Notes:

- Values at +25 °C, sea level

Flexible RG223 Coax Cable Double Shielded with Black PVC Jacket from Pasternack Enterprises has same day shipment for domestic and International orders. Our RF, microwave and millimeter wave products maintain a 99% availability and are part of the broadest selection in the industry.

Click the following link (or enter part number in "SEARCH" on website) to obtain additional part information including price, inventory and certifications: Flexible RG223 Coax Cable Double Shielded with Black PVC Jacket RG223/U

URL: http://www.pasternack.com/flexible-0.216-rg223-50-ohm-coax-cable-pvc-jacket-rg223-u-p.aspx

The information contained in this document is accurate to the best of our knowledge and representative of the part described herein. It may be necessary to make modifications to the part and/or the documentation of the part, in order to implement improvements. Pasternack reserves the right to make such changes as required. Unless otherwise stated, all specifications are nominal. Pasternack does not make any representation or warranty regarding the suitability of the part described herein for any particular purpose, and Pasternack does not assume any liability arising out of the use of any part or documentation.

Pasternack Enterprises, Inc. • P.O. Box 16759, Irvine, CA 92623
Phone: (866) 727-8376 or (949) 261-1920 • **Fax:** (949) 261-7451
Sales@Pasternack.com • Techsupport@Pasternack.com

© 2014 Pasternack Enterprises All Rights Reserved

RG223/U CAD Drawing

Flexible RG223 Coax Cable Double Shielded with Black PVC Jacket

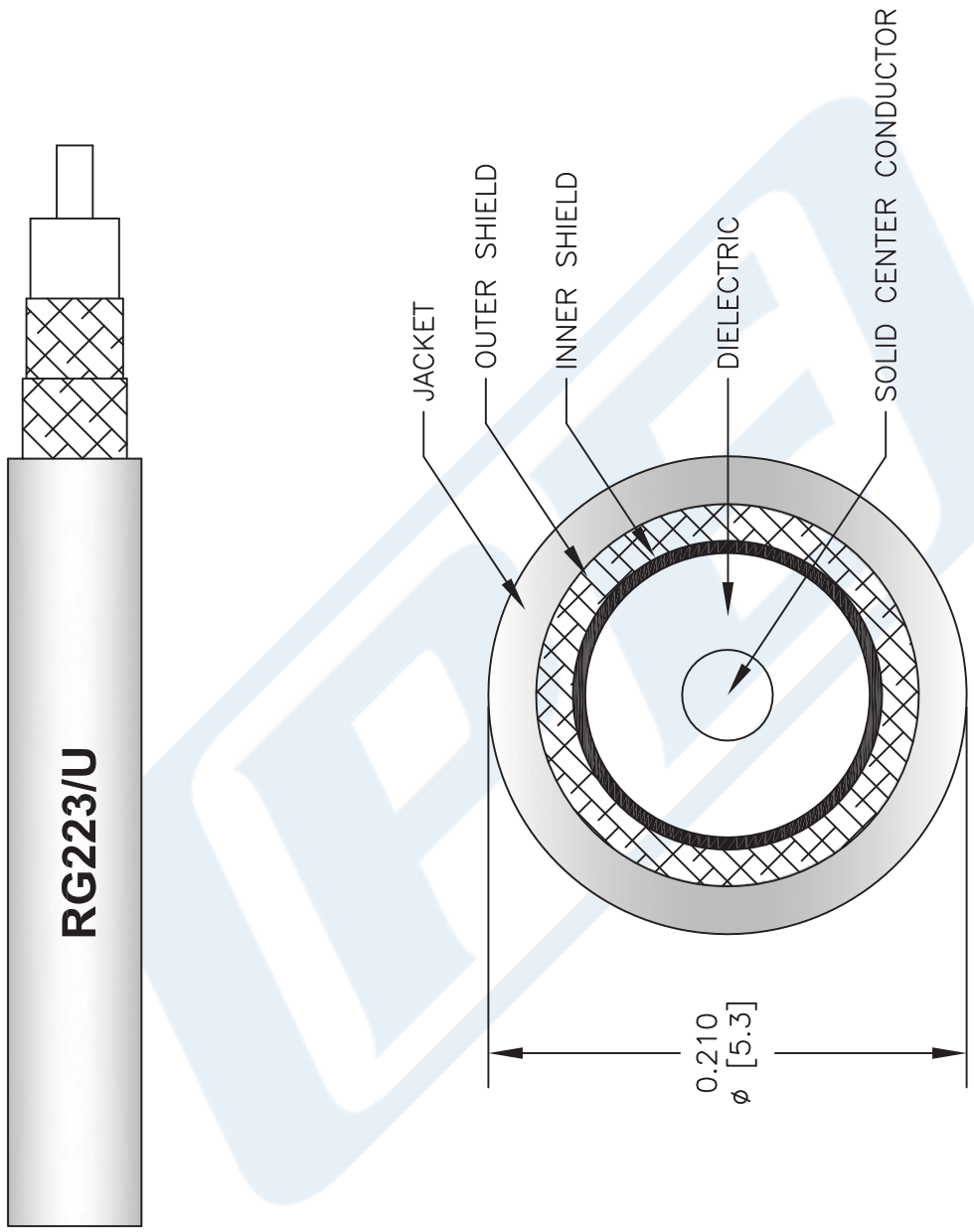

NOTES:
1. UNLESS OTHERWISE SPECIFIED ALL DIMENSIONS ARE NOMINAL.
2. ALL SPECIFICATIONS ARE SUBJECT TO CHANGE WITHOUT NOTICE AT ANY TIME.
3. DIMENSIONS ARE IN INCHES [mm].

DWG TITLE
RG223/U

FSCM NO. 53919

CAD FILE 060508-B | SCALE N/A | SIZE A | 2233

PASTERNACK®
Pasternack Enterprises, Inc.
P.O. Box 16759 | Irvine | CA | 92623
Phone: (949) 261-1920 | **Fax:** (949) 261-7451
Website: www.pasternack.com | **E-Mail:** sales@pasternack.com

© 2014 Pasternack Enterprises All Rights Reserved