PASTERNACK®
THE ENGINEER'S RF SOURCE

# SMA Male Connector Crimp/Crimp Attachment for RG174, RG316, RG188, LMR-100, PE-B100, PE-C100, 0.100 inch



## Configuration

- SMA Male Connector
- MIL-STD-348A
- 50 Ohms
- Straight Body Geometry
- RG174, RG316, RG188, LMR-100, PE-B100, PE-C100, 0.100 inch Interface Type
- Crimp/Crimp Attachment
- 5/16 inch Hex

## Features

- Max. Operating Frequency 3 GHz
- Excellent VSWR of 1.21:1
- Gold Plated Brass Contact
- 30 µin minimum contact plating

## Applications

- General Purpose Test
- Custom Cable Assemblies

### Description

Pasternack's PE4003 SMA male connector with crimp/crimp attachment for RG174, RG316, RG188, LMR-100, PE-B100, PE-C100 and 0.100 inch is part of our full line of RF components available for same-day shipping. Our SMA male connector operates up to a maximum frequency of 3 GHz and offers excellent VSWR of 1.21:1.

Our SMA male connector PE4003 datasheet specifications and drawing with dimensions are shown below in this PDF. Pasternack's broad catalog of RF, microwave and millimeter wave connectors allows designers to configure and customize their signal connections however they like. Whether the need is to provide an I/O for a board design, or simply create a custom cable assembly configuration, Pasternack has the right connector for the job. Pasternack can also expertly build your custom cable assemblies for you and ship same-day.

### Electrical Specifications

| Description | Minimum | Typical | Maximum | Units |
|---|---|---|---|---|
| Frequency Range | DC | | 3 | GHz |
| VSWR | | | 1.21:1 | |
| Operating Voltage (AC) | | | 335 | Vrms |

### Mechanical Specifications

| | |
|---|---|
| **Size** | |
| Length | 0.87 in [22.1 mm] |
| Width/Dia. | 0.315 in [8.00 mm] |
| Weight | 0.012 lbs [5.44 g] |
| Mating Torque | 3 to 5 in-lbs [0.34 to 0.57 Nm] |

Click the following link (or enter part number in "SEARCH" on website) to obtain additional part information including price, inventory and certifications: SMA Male Connector Crimp/Crimp Attachment for RG174, RG316, RG188, LMR-100, PE-B100, PE-C100, 0.100 inch PE4003

Pasternack Enterprises, Inc. • P.O. Box 16759, Irvine, CA 92623
**Phone:** (866) 727-8376 or (949) 261-1920 • **Fax:** (949) 261-7451
Sales@Pasternack.com • Techsupport@Pasternack.com

© 2016 Pasternack Enterprises All Rights Reserved

# SMA Male Connector Crimp/Crimp Attachment for RG174, RG316, RG188, LMR-100, PE-B100, PE-C100, 0.100 inch



**Material Specifications**

| Description | Material | Plating |
|---|---|---|
| Contact | Brass | Gold<br>30 µin minimum |
| Insulation | PTFE | |
| Body | Brass | Nickel<br>100 µin minimum |
| Coupling Nut | Brass | Nickel<br>100 µin minimum |
| Crimp Sleeve | Brass | Nickel |

## Environmental Specifications

**Temperature**

Operating Range -65 to +165 deg C

## Compliance Certifications (see product page for current document)

## Plotted and Other Data

Notes:

SMA Male Connector Crimp/Crimp Attachment for RG174, RG316, RG188, LMR-100, PE-B100, PE-C100, 0.100 inch from Pasternack Enterprises has same day shipment for domestic and International orders. Our RF, microwave and millimeter wave products maintain a 99% availability and are part of the broadest selection in the industry.

Click the following link (or enter part number in "SEARCH" on website) to obtain additional part information including price, inventory and certifications: SMA Male Connector Crimp/Crimp Attachment for RG174, RG316, RG188, LMR-100, PE-B100, PE-C100, 0.100 inch PE4003

URL: https://www.pasternack.com/sma-male-rg174-rg316-rg188-lmr-100-pe-b100-pe-c100-0.100-connector-pe4003-p.aspx

The information contained in this document is accurate to the best of our knowledge and representative of the part described herein. It may be necessary to make modifications to the part and/or the documentation of the part, in order to implement improvements. Pasternack reserves the right to make such changes as required. Unless otherwise stated, all specifications are nominal. Pasternack does not make any representation or warranty regarding the suitability of the part described herein for any particular purpose, and Pasternack does not assume any liability arising out of the use of any part or documentation.

Pasternack Enterprises, Inc. • P.O. Box 16759, Irvine, CA 92623
**Phone:** (866) 727-8376 or (949) 261-1920 • **Fax:** (949) 261-7451
Sales@Pasternack.com • Techsupport@Pasternack.com

© 2016 Pasternack Enterprises All Rights Reserved

# PE4003 CAD Drawing

SMA Male Connector Crimp/Crimp Attachment for RG174, RG316, RG188, LMR-100, PE-B100, PE-C100, 0.100 inch

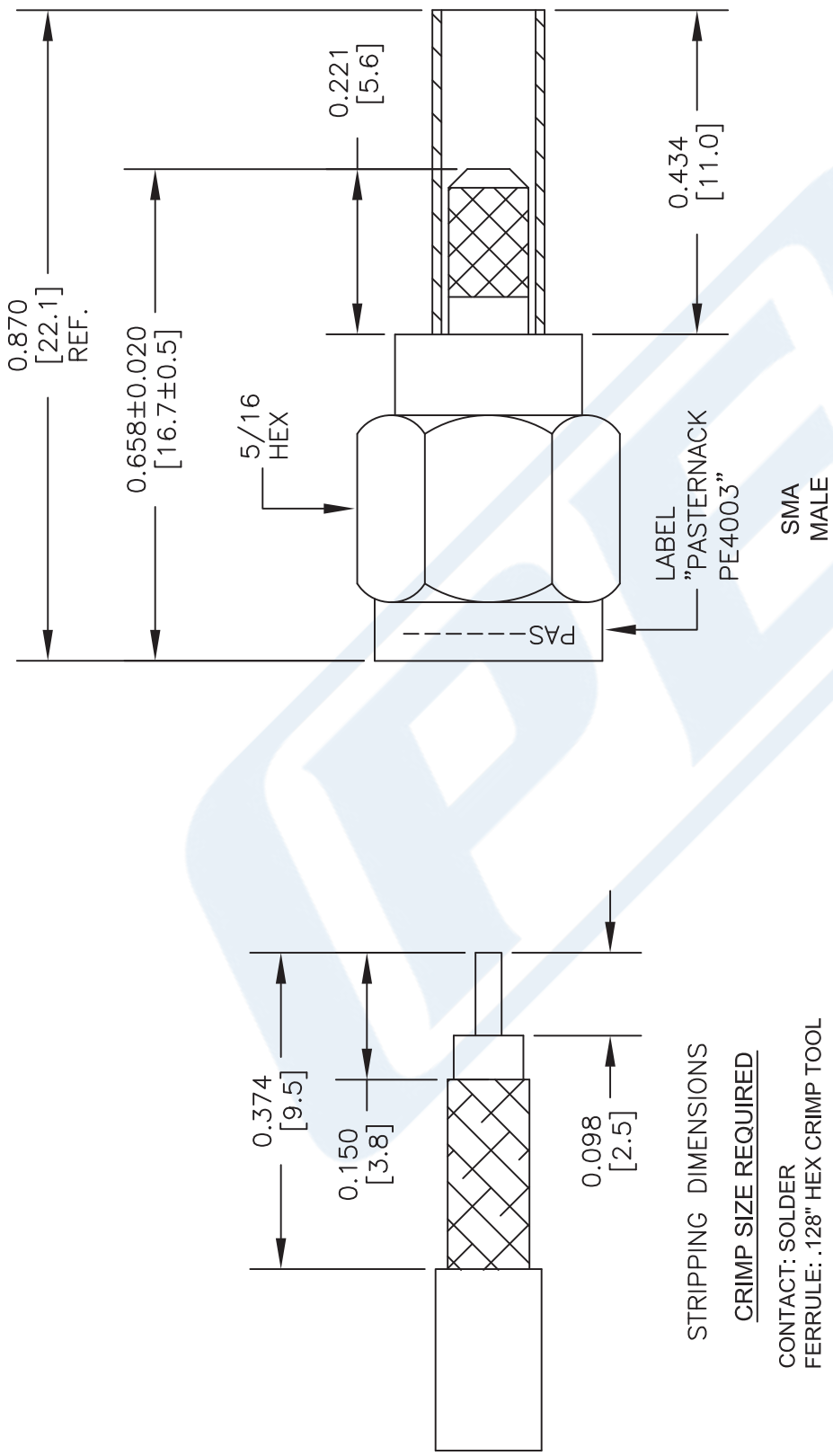


STRIPPING DIMENSIONS

CRIMP SIZE REQUIRED

CONTACT: SOLDER
FERRULE: .128" HEX CRIMP TOOL

| STANDARD TOLERANCES | |
|---|---|
| .X | ±0.2 |
| .XX | ±0.1 |
| .XXX | ±0.05 |

*STANDARD TOLERANCES APPLY ONLY TO DIMENSIONS IN INCHES

NOTES:
1. UNLESS OTHERWISE SPECIFIED ALL DIMENSIONS ARE NOMINAL.
2. ALL SPECIFICATIONS ARE SUBJECT TO CHANGE WITHOUT NOTICE AT ANY TIME.
3. DIMENSIONS ARE IN INCHES [mm].

DWG TITLE
PE4003

FSCM NO. 53919

CAD FILE 071316 | SCALE N/A | SIZE A | 3045

PASTERNACK®
THE ENGINEER'S RF SOURCE
Pasternack Enterprises, Inc.
P.O. Box 16759 | Irvine | CA | 92623
**Phone:** (949) 261-1920 | **Fax:** (949) 261-7451
**Website:** www.pasternack.com | **E-Mail:** sales@pasternack.com

© 2016 Pasternack Enterprises All Rights Reserved

PASTERNACK®
www.pasternack.com

# FME Plug Connector Crimp/Solder Attachment For RG174, RG316, RG188

TECHNICAL DATA SHEET PE44297

## FME Plug Connector Crimp/Solder Attachment For RG174, RG316, RG188

### Configuration

| | |
|---|---|
| Connector | FME Plug |
| Connector Interface Type | RG174,RG316,RG188 |
| Cable Attachment Method (Shield/Contact) | Crimp/Solder |
| Body Style | Straight |

### Electrical Specifications

| | |
|---|---|
| Impedance, Ohms | 50 |

### Mechanical Specifications

**Size**

| | |
|---|---|
| Length, in [mm] | 1.332 [33.83] |
| Width/Dia., in [mm] | 0.359 [9.12] |
| Weight, lbs [g] | 0.013 [5.9] |

**Connector**

| | |
|---|---|
| Type | FME Plug |
| Contact Material and Plating | Brass, Gold |
| Contact Plating Specification | 30µ in. minimum |
| Body Material and Plating | Brass, Nickel |
| Body Plating Specification | 100µ in. minimum |
| Dielectric Type | Teflon |

### Compliance Certifications (visit www.Pasternack.com for current document)

| | |
|---|---|
| RoHS Compliant | Yes |

### Plotted and Other Data

| | |
|---|---|
| Notes: | Values at 25 °C, sea level |

FME Plug Connector Crimp/Solder Attachment For RG174, RG316, RG188 from Pasternack Enterprises has same day shipment for domestic and International orders. Our RF, microwave and fiber optic products maintain a 99% availability and are part of the broadest selection in the industry.

Click the following link (or enter part number in “SEARCH” on website) to obtain additional part information including price, inventory and certifications: FME Plug Connector Crimp/Solder Attachment For RG174, RG316, RG188 PE44297

URL: http://www.pasternack.com/fme-plug-standard-rg174-rg316-rg188-connector-pe44297-p.aspx

The information contained in this document is accurate to the best of our knowledge and representative of the part described herein. It may be necessary to make modifications to the part and/or the documentation of the part, in order to implement improvements. Pasternack reserves the right to make such changes as required. Unless otherwise stated, all specifications are nominal.

Pasternack Enterprises, Inc. • P.O. Box 16759, Irvine, CA 92623
**Phone:** (866) 727-8376 or (949) 261-1920 • **Fax:** (949) 261-7451
Sales@Pasternack.com • Techsupport@Pasternack.com

© 2013 Pasternack Enterprises All Rights Reserved

# PE44297 CAD Drawing

FME Plug Connector Crimp/Solder Attachment For RG174, RG316, RG188

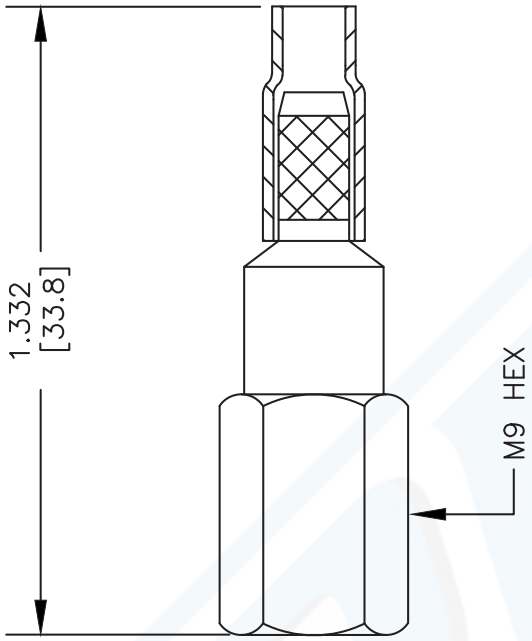


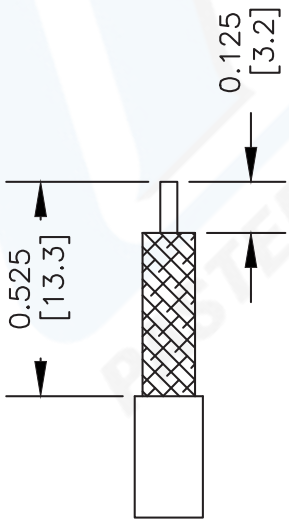


STRIPPING DIMENSIONS

CRIMP SIZE REQUIRED

CONTACT: .068
FERRULE: .128" HEX CRIMP TOOL

NOTES:
1. UNLESS OTHERWISE SPECIFIED ALL DIMENSIONS ARE NOMINAL.
2. ALL SPECIFICATIONS ARE SUBJECT TO CHANGE WITHOUT NOTICE AT ANY TIME.
3. DIMENSIONS ARE IN INCHES [mm].
4. FITS MIL-C-17 AND EQUIVALENT CABLES.

| | | | |
|---|---|---|---|
| DWG TITLE PE44297 | CAD FILE 062102 | SCALE N/A | SIZE A | XXXX |
| FSCM NO. 53919 | | | |

PASTERNACK®
Pasternack Enterprises, Inc.
P.O. Box 16759 | Irvine | CA | 92623
**Phone:** (949) 261-1920 | **Fax:** (949) 261-7451
**Website:** www.pasternack.com | **E-Mail:** sales@pasternack.com

© 2013 Pasternack Enterprises All Rights Reserved

PASTERNACK®
www.pasternack.com

# Flexible RG188 Coax Cable Single Shielded with White PTFE Jacket

## TECHNICAL DATA SHEET RG188A/U

Flexible RG188 Coax Cable Single Shielded with White PTFE Jacket

### Configuration

| | |
|---|---|
| Inner Conductor Material and Plating | Copper Clad Steel, Silver |
| Dielectric Type | PTFE |
| Shield Materials | Silver Plated Copper Braid |
| Jacket Material and Color | PTFE, White |

### Electrical Specifications

| | |
|---|---|
| Impedance, Ohms | 50 |
| Dielectric Withstanding Voltage, Vrms | 2,000 |

**Electrical Specifications by Frequency**

**Frequency 1**

| | |
|---|---|
| Frequency, MHz | 400 |
| Attenuation, dB/100ft [dB/100m] | 20 [65.62] |

### Mechanical Specifications

**Temperature**

**Inner Conductor**

| | |
|---|---|
| Number of Strands | 7 |
| Material | Copper Clad Steel |
| Plating | Silver |
| Diameter, in [mm] | 0.02 [0.51] |

**Dielectric:**

| | |
|---|---|
| Type | PTFE |
| Diameter, in [mm] | 0.06 [1.52] |

**Shield:**

| | |
|---|---|
| Number of | 1 |
| Material 1 | Silver Plated Copper Braid |
| Diameter, in [mm] | 0.081 [2.06] |

**Jacket:**

| | |
|---|---|
| Material | PTFE |
| Diameter, in [mm] | 0.11 [2.79] |
| Color | White |
| Weight, lbs/ft [Kg/m] | 0.011 [0.02] |

Click the following link (or enter part number in “SEARCH” on website) to obtain additional part information including price, inventory and certifications: Flexible RG188 Coax Cable Single Shielded with White PTFE Jacket RG188A/U

The information contained in this document is accurate to the best of our knowledge and representative of the part described herein. It may be necessary to make modifications to the part and/or the documentation of the part, in order to implement improvements. Pasternack reserves the right to make such changes as required. Unless otherwise stated, all specifications are nominal.

Pasternack Enterprises, Inc. • P.O. Box 16759, Irvine, CA 92623
**Phone:** (866) 727-8376 or (949) 261-1920 • **Fax:** (949) 261-7451
Sales@Pasternack.com • Techsupport@Pasternack.com

© 2013 Pasternack Enterprises All Rights Reserved

# Flexible RG188 Coax Cable Single Shielded with White PTFE Jacket



**Compliance Certifications** (visit www.Pasternack.com for current document)

| | |
|---|---|
| RoHS Compliant | Yes |

**Plotted and Other Data**

| | |
|---|---|
| Notes: | Values at 25 °C, sea level |

URL: http://www.pasternack.com/flexible-0.110-rg188-50-ohm-coax-cable-ptfe-jacket-rg188a-u-p.aspx

Flexible RG188 Coax Cable Single Shielded with White PTFE Jacket from Pasternack Enterprises has same day shipment for domestic and International orders. Our RF, microwave and fiber optic products maintain a 99% availability and are part of the broadest selection in the industry.

The information contained in this document is accurate to the best of our knowledge and representative of the part described herein. It may be necessary to make modifications to the part and/or the documentation of the part, in order to implement improvements. Pasternack reserves the right to make such changes as required. Unless otherwise stated, all specifications are nominal.

Pasternack Enterprises, Inc. • P.O. Box 16759, Irvine, CA 92623
**Phone:** (866) 727-8376 or (949) 261-1920 • **Fax:** (949) 261-7451
Sales@Pasternack.com • Techsupport@Pasternack.com

© 2013 Pasternack Enterprises All Rights Reserved

# RG188A/U CAD Drawing

Flexible RG188 Coax Cable Single Shielded with White PTFE Jacket

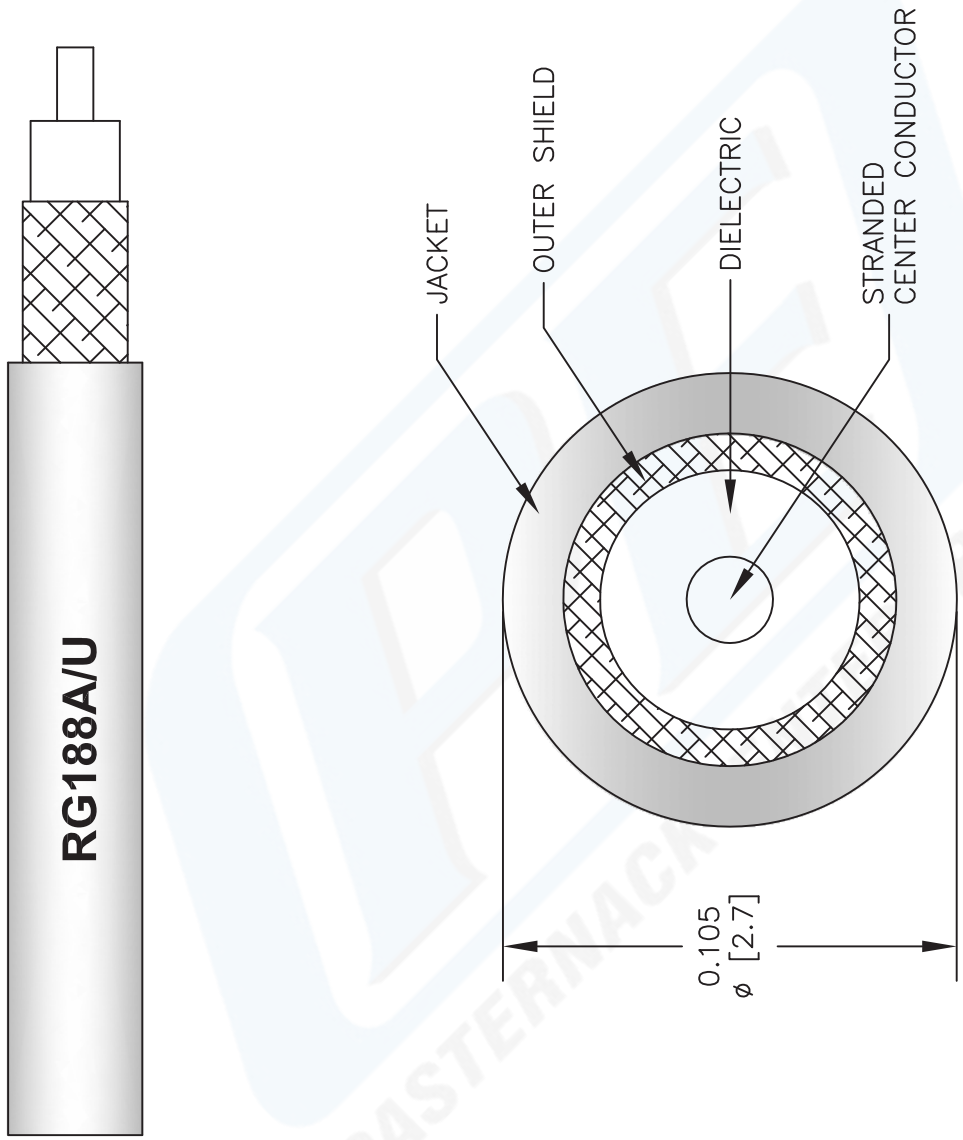


NOTES:
1. UNLESS OTHERWISE SPECIFIED ALL DIMENSIONS ARE NOMINAL.
2. ALL SPECIFICATIONS ARE SUBJECT TO CHANGE WITHOUT NOTICE AT ANY TIME.
3. DIMENSIONS ARE IN INCHES [mm].

DWG TITLE
RG188A/U

FSCM NO. 53919

CAD FILE 081512-C | SCALE N/A | SIZE A | 2233

PASTERNACK®
Pasternack Enterprises, Inc.
P.O. Box 16759 | Irvine | CA | 92623
**Phone:** (949) 261-1920 | **Fax:** (949) 261-7451
**Website:** www.pasternack.com | **E-Mail:** sales@pasternack.com

© 2012 Pasternack Enterprises All Rights Reserved