PASTERNACK®
THE ENGINEER'S RF SOURCE

N Male Right Angle Connector Clamp/Solder Attachment for RG213, RG8, RG215, RG225, RG214, RG393

Configuration

- N Male Connector
- MIL-STD-348A
- 50 Ohms
- Right Angle Body Geometry
- RG213, RG8, RG215, RG225, RG214, RG393 Interface Type
- Clamp/Solder Attachment

Features

- Max. Operating Frequency 11 GHz
- Gold Plated Brass Contact
- 30 µin minimum contact plating

Applications

- General Purpose Test
- Custom Cable Assemblies

Description

Pasternack's PE4136 type N male right angle connector with clamp/solder attachment for RG213, RG8, RG215, RG225, RG214 and RG393 is part of our full line of RF components available for same-day shipping. Our type N male connector operates up to a maximum frequency of 11 GHz. Its right angle body geometry allows for easier connections in tight spaces.

Our type N male right angle connector PE4136 datasheet specifications and drawing with dimensions are shown below in this PDF. Pasternack's broad catalog of RF, microwave and millimeter wave connectors allows designers to configure and customize their signal connections however they like. Whether the need is to provide an I/O for a board design, or simply create a custom cable assembly configuration, Pasternack has the right connector for the job. Pasternack can also expertly build your custom cable assemblies for you and ship same-day.

Electrical Specifications

Description	Minimum	Typical	Maximum	Units
Frequency Range	DC		11	GHz
Operating Voltage (AC)			1,000	Vrms
Dielectric Withstanding Voltage (AC)			2,500	Vrms

Mechanical Specifications

Size	
Length	1.96 in [49.78 mm]
Width/Dia.	0.827 in [21.01 mm]
Height	1.295 in [32.89 mm]
Weight	0.18 lbs [81.65 g]

Click the following link (or enter part number in "SEARCH" on website) to obtain additional part information including price, inventory and certifications: N Male Right Angle Connector Clamp/Solder Attachment for RG213, RG8, RG215, RG225, RG214, RG393 PE4136

Pasternack Enterprises, Inc. • P.O. Box 16759, Irvine, CA 92623
Phone: (866) 727-8376 or (949) 261-1920 • **Fax:** (949) 261-7451
Sales@Pasternack.com • Techsupport@Pasternack.com

© 2017 Pasternack Enterprises All Rights Reserved

N Male Right Angle Connector Clamp/Solder Attachment for RG213, RG8, RG215, RG225, RG214, RG393

Material Specifications

Description	Material	Plating
Contact	Brass	Gold 30 µin minimum
Insulation	PTFE	
Body	Brass	Nickel 100 µin minimum
Coupling Nut	Brass	Nickel 100 µin minimum

Environmental Specifications

Temperature

Operating Range -65 to +165 deg C

Compliance Certifications (see product page for current document)

Plotted and Other Data

Notes:

N Male Right Angle Connector Clamp/Solder Attachment for RG213, RG8, RG215, RG225, RG214, RG393 from Pasternack Enterprises has same day shipment for domestic and International orders. Our RF, microwave and millimeter wave products maintain a 99.4% availability and are part of the broadest selection in the industry.

Click the following link (or enter part number in "SEARCH" on website) to obtain additional part information including price, inventory and certifications: N Male Right Angle Connector Clamp/Solder Attachment for RG213, RG8, RG215, RG225, RG214, RG393 PE4136

URL: https://www.pasternack.com/n-male-rg213-rg8-rg215-rg225-rg214-rg393-connector-pe4136-p.aspx

The information contained in this document is accurate to the best of our knowledge and representative of the part described herein. It may be necessary to make modifications to the part and/or the documentation of the part, in order to implement improvements. Pasternack reserves the right to make such changes as required. Unless otherwise stated, all specifications are nominal. Pasternack does not make any representation or warranty regarding the suitability of the part described herein for any particular purpose, and Pasternack does not assume any liability arising out of the use of any part or documentation.

Pasternack Enterprises, Inc. • P.O. Box 16759, Irvine, CA 92623
Phone: (866) 727-8376 or (949) 261-1920 • **Fax:** (949) 261-7451
Sales@Pasternack.com • Techsupport@Pasternack.com

© 2017 Pasternack Enterprises All Rights Reserved

PE4136 CAD Drawing

N Male Right Angle Connector Clamp/Solder Attachment for
RG213, RG8, RG215, RG225, RG214, RG393

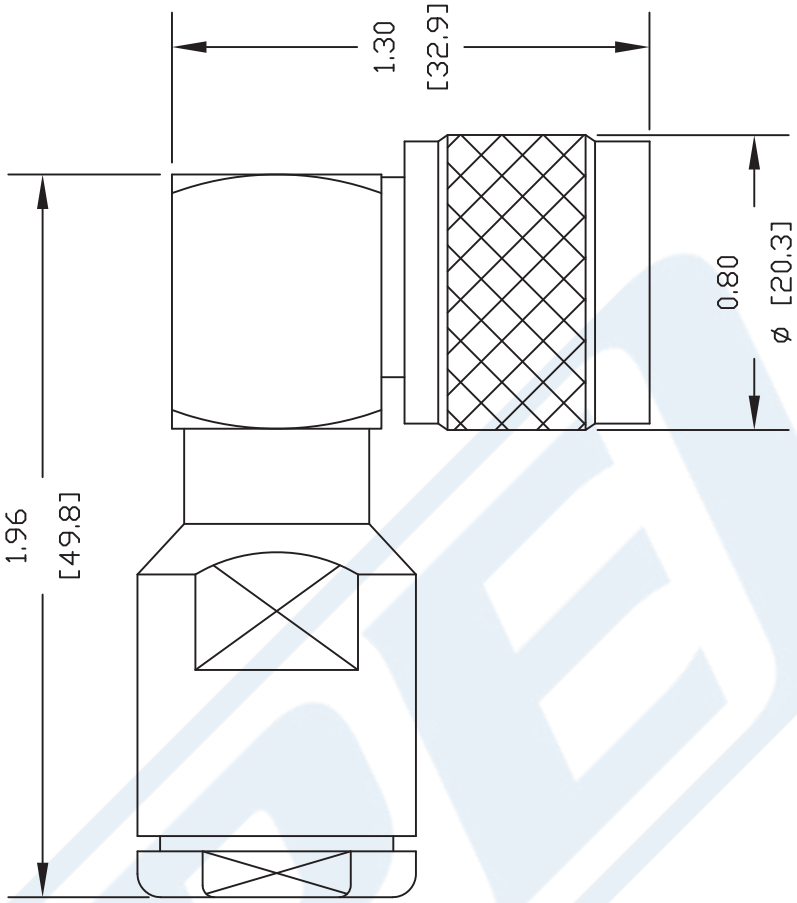

ASSEMBLY PROCEDURES

1. SLIDE CLAMP NUT (1), WASHER (2) & GASKET (3) OVER CABLE. STRIP CABLE AS SHOWN. DO NOT NICK BRAID WHILE CUTTING JACKET. TAPER END OF BRAID TO PERMIT ASSEMBLY OF BRAID CLAMP (4) SLIDE BRAID CLAMP(4) OVER BRAID & SEAT AGAINST JACKET.

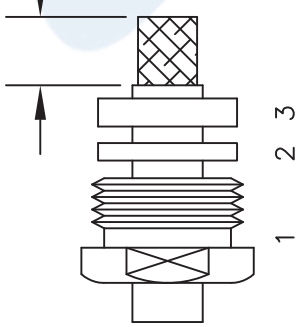

2. FORM BRAID OVER CLAMP NUT (4). TRIM BRAID BACK TO SHOULDER. CUT DIELECTRIC TO DIMENSION SHOWN. DO NOT NICK CENTER CONDUCTOR. SOLDER CONTACT TO CENTER CONDUCTOR. REMOVE EXCESS SOLDER. DO NOT OVER HEAT DIELECTRIC. INSERT CABLE ASSEMBLY INTO BODY & TIGHTEN.

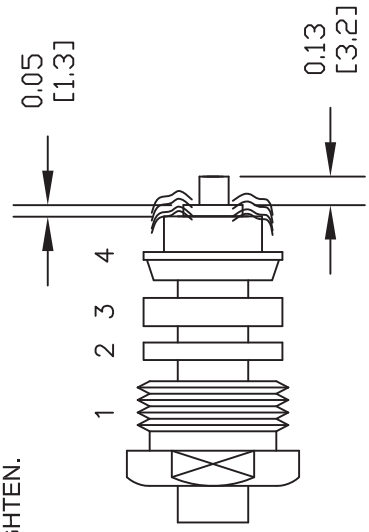

NOTES:
1. UNLESS OTHERWISE SPECIFIED ALL DIMENSIONS ARE NOMINAL.
2. ALL SPECIFICATIONS ARE SUBJECT TO CHANGE WITHOUT NOTICE AT ANY TIME.
3. DIMENSIONS ARE IN INCHES [mm].
4. FITS MIL-C-17 AND EQUIVALENT CABLES.

DWG TITLE PE4136

REV. -	FSCM NO. 53919	CAD FILE 122904	SCALE N/A	SIZE A	127

PASTERNACK®
Pasternack Enterprises, Inc.
P.O. Box 16759 | Irvine | CA | 92623
Phone: (949) 261-1920 | **Fax:** (949) 261-7451
Website: www.pasternack.com | **E-Mail:** sales@pasternack.com

© 2017 Pasternack Enterprises All Rights Reserved

HN Male Right Angle Connector Clamp/Solder Attachment for RG213, RG8, RG393, RG225, RG214, RG393, RG9

Configuration

- HN Male Connector
- MIL-STD-348A
- 50 Ohms
- Right Angle Body Geometry
- RG213, RG8, RG393, RG225, RG214, RG393, RG9 Interface Type
- Clamp/Solder Attachment

Features

- Max. Operating Frequency 3 GHz
- Good VSWR of 1.3:1
- Gold Plated Brass Contact
- 30 µin minimum contact plating

Applications

- General Purpose Test
- Custom Cable Assemblies

Description

Pasternack's PE4230 HN male right angle connector with clamp/solder attachment for RG213, RG8, RG393, RG225, RG214, RG393 and RG9 is part of our full line of RF components available for same-day shipping. Our HN male connector operates up to a maximum frequency of 3 GHz and offers good VSWR of 1.3:1. Its right angle body geometry allows for easier connections in tight spaces.

Our HN male right angle connector PE4230 datasheet specifications and drawing with dimensions are shown below in this PDF. Pasternack's broad catalog of RF, microwave and millimeter wave connectors allows designers to configure and customize their signal connections however they like. Whether the need is to provide an I/O for a board design, or simply create a custom cable assembly configuration, Pasternack has the right connector for the job. Pasternack can also expertly build your custom cable assemblies for you and ship same-day.

Electrical Specifications

Description	Minimum	Typical	Maximum	Units
Frequency Range	DC		3	GHz
VSWR			1.3:1	
Operating Voltage (AC)			1,500	Vrms

Mechanical Specifications

Size	
Length	1.85 in [46.99 mm]
Width/Dia.	0.866 in [22.00 mm]
Height	1.461 in [37.11 mm]
Weight	0.202 lbs [91.63 g]

Click the following link (or enter part number in "SEARCH" on website) to obtain additional part information including price, inventory and certifications: HN Male Right Angle Connector Clamp/Solder Attachment for RG213, RG8, RG393, RG225, RG214, RG393, RG9 PE4230

HN Male Right Angle Connector Clamp/Solder Attachment for RG213, RG8, RG393, RG225, RG214, RG393, RG9

Material Specifications

Description	Material	Plating
Contact	Brass	Gold 30 µin minimum
Insulation	PTFE	
Body	Brass	Nickel 100 µin minimum
Coupling Nut	Brass	Nickel 100 µin minimum

Environmental Specifications

Temperature

Operating Range -65 to +165 deg C

Compliance Certifications (see product page for current document)

Plotted and Other Data

Notes:

Click the following link (or enter part number in “SEARCH” on website) to obtain additional part information including price, inventory and certifications: HN Male Right Angle Connector Clamp/Solder Attachment for RG213, RG8, RG393, RG225, RG214, RG393, RG9 PE4230

HN Male Right Angle Connector Clamp/Solder Attachment for RG213, RG8, RG393, RG225, RG214, RG393, RG9

Assembly Instruction

Click the following link (or enter part number in “SEARCH” on website) to obtain additional part information including price, inventory and certifications: HN Male Right Angle Connector Clamp/Solder Attachment for RG213, RG8, RG393, RG225, RG214, RG393, RG9 PE4230

HN Male Right Angle Connector Clamp/Solder Attachment for RG213, RG8, RG393, RG225, RG214, RG393, RG9

HN Male Right Angle Connector Clamp/Solder Attachment for RG213, RG8, RG393, RG225, RG214, RG393, RG9 from Pasternack Enterprises has same day shipment for domestic and International orders. Our RF, microwave and millimeter wave products maintain a 99.4% availability and are part of the broadest selection in the industry.

Click the following link (or enter part number in “SEARCH” on website) to obtain additional part information including price, inventory and certifications: HN Male Right Angle Connector Clamp/Solder Attachment for RG213, RG8, RG393, RG225, RG214, RG393, RG9 PE4230

URL: https://www.pasternack.com/hn-male-standard-rg213-rg214-rg8-rg9-rg225-rg393-connector-pe4230-p.aspx

The information contained in this document is accurate to the best of our knowledge and representative of the part described herein. It may be necessary to make modifications to the part and/or the documentation of the part, in order to implement improvements. Pasternack reserves the right to make such changes as required. Unless otherwise stated, all specifications are nominal. Pasternack does not make any representation or warranty regarding the suitability of the part described herein for any particular purpose, and Pasternack does not assume any liability arising out of the use of any part or documentation.

PE4230 CAD Drawing

HN Male Right Angle Connector Clamp/Solder Attachment for
RG213, RG8, RG393, RG225, RG214, RG393, RG9

PASTERNACK®
www.pasternack.com

Flexible RG225 Coax Cable Double Shielded with Tan PTFE (Fiberglass reinforced) Jacket

TECHNICAL DATA SHEET RG225/U

Flexible RG225 Coax Cable Double Shielded with Tan PTFE (FG) Jacket

Configuration

Inner Conductor Material and Plating	Copper, Silver
Dielectric Type	PTFE
Shield Materials	Silver Plated Copper Braid, Silver Plated Copper Braid
Jacket Material and Color	PTFE (FG), Tan

Electrical Specifications

Impedance, Ohms	50
Maximum Operating Frequency, MHz	400
Capacitance, pF/ft [pF/m]	32.4 [106.3]
Dielectric Withstanding Voltage, Vrms	10,000

Electrical Specifications by Frequency

Frequency 1

Frequency, MHz	400
Attenuation, dB/100ft [dB/100m]	5 [16.4]

Mechanical Specifications

Inner Conductor

Number of Strands	7
Material	Copper
Plating	Silver
Diameter, in [mm]	0.094 [2.39]

Dielectric:

Type	PTFE
Diameter, in [mm]	0.285 [7.24]

Shield:

Number of	2
Material 1	Silver Plated Copper Braid
Material 2	Silver Plated Copper Braid
Diameter, in [mm]	0.36 [9.14]

Jacket:

Material	PTFE (FG)
Diameter, in [mm]	0.43 [10.92]
Color	Tan
Weight, lbs/ft [Kg/m]	0.195 [0.29]

Click the following link (or enter part number in “SEARCH” on website) to obtain additional part information including price, inventory and certifications: Flexible RG225 Coax Cable Double Shielded with Tan PTFE (FG) Jacket RG225/U

The information contained in this document is accurate to the best of our knowledge and representative of the part described herein. It may be necessary to make modifications to the part and/or the documentation of the part, in order to implement improvements. Pasternack reserves the right to make such changes as required. Unless otherwise stated, all specifications are nominal.

Pasternack Enterprises, Inc. • P.O. Box 16759, Irvine, CA 92623
Phone: (866) 727-8376 or (949) 261-1920 • **Fax:** (949) 261-7451
Sales@Pasternack.com • Techsupport@Pasternack.com

© 2013 Pasternack Enterprises All Rights Reserved

PASTERNACK®
www.pasternack.com

Flexible RG225 Coax Cable Double Shielded with Tan PTFE (Fiberglass reinforced) Jacket

TECHNICAL DATA SHEET RG225/U

Compliance Certifications (visit www.Pasternack.com for current document)

RoHS Compliant	Yes

Plotted and Other Data

Notes:	Values at 25 °C, sea level

Flexible RG225 Coax Cable Double Shielded with Tan PTFE (Fiberglass reinforced) Jacket from Pasternack Enterprises has same day shipment for domestic and International orders. Our RF, microwave and fiber optic products maintain a 99% availability and are part of the broadest selection in the industry.

Click the following link (or enter part number in “SEARCH” on website) to obtain additional part information including price, inventory and certifications: Flexible RG225 Coax Cable Double Shielded with Tan PTFE (FG) Jacket RG225/U

URL: http://www.pasternack.com/flexible-0.430-rg225-50-ohm-coax-cable-ptfe-fr-jacket-rg225-u-p.aspx

The information contained in this document is accurate to the best of our knowledge and representative of the part described herein. It may be necessary to make modifications to the part and/or the documentation of the part, in order to implement improvements. Pasternack reserves the right to make such changes as required. Unless otherwise stated, all specifications are nominal.

Pasternack Enterprises, Inc. • P.O. Box 16759, Irvine, CA 92623
Phone: (866) 727-8376 or (949) 261-1920 • **Fax:** (949) 261-7451
Sales@Pasternack.com • Techsupport@Pasternack.com

© 2013 Pasternack Enterprises All Rights Reserved

RG225/U CAD Drawing

Flexible RG225 Coax Cable Double Shielded with Tan PTFE (Fiberglass reinforced) Jacket

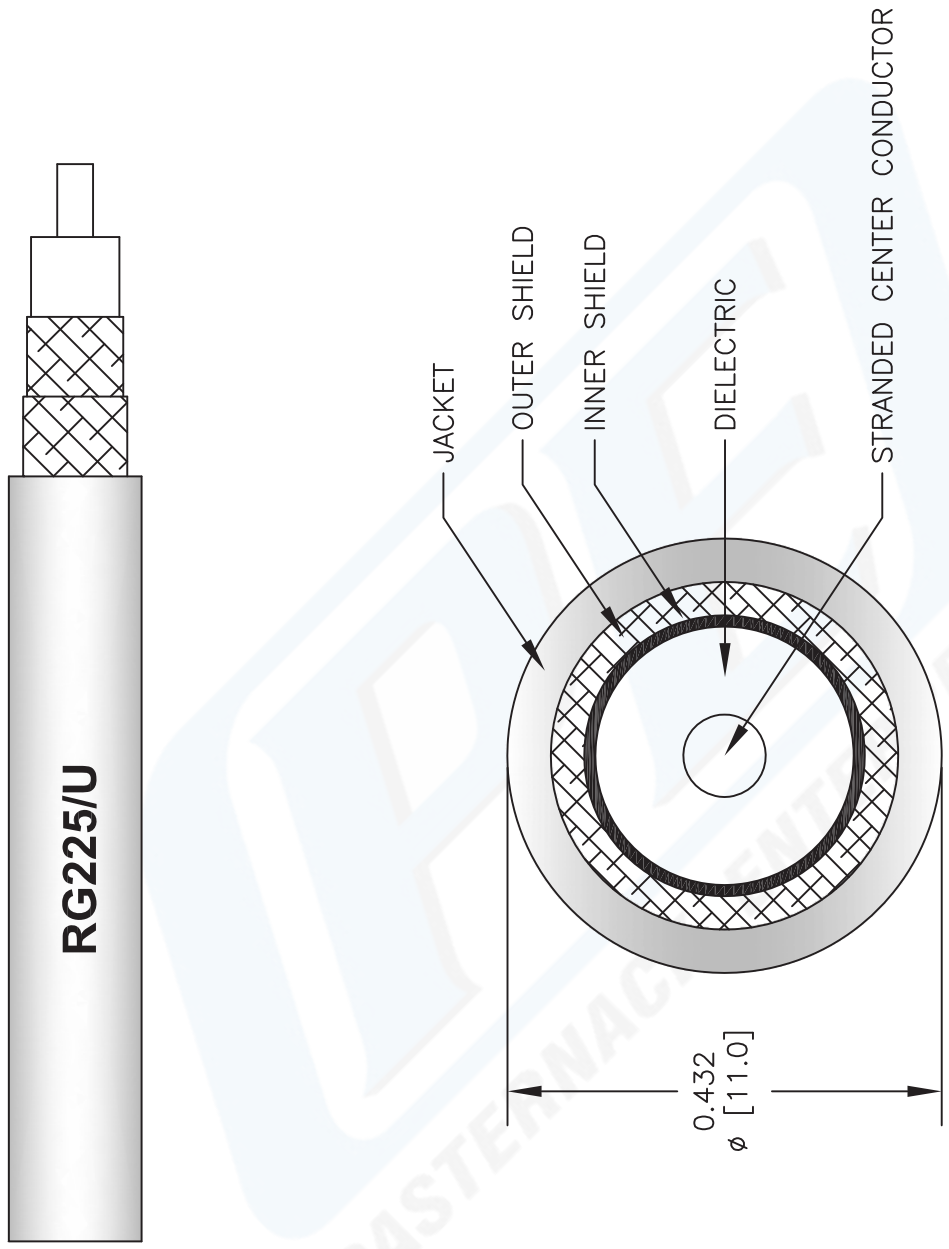

NOTES:
1. UNLESS OTHERWISE SPECIFIED ALL DIMENSIONS ARE NOMINAL.
2. ALL SPECIFICATIONS ARE SUBJECT TO CHANGE WITHOUT NOTICE AT ANY TIME.
3. DIMENSIONS ARE IN INCHES [mm].

DWG TITLE
RG225/U

FSCM NO. 53919

CAD FILE 083012-B | SCALE N/A | SIZE A | 2233

PASTERNACK®
Pasternack Enterprises, Inc.
P.O. Box 16759 | Irvine | CA | 92623
Phone: (949) 261-1920 | **Fax:** (949) 261-7451
Website: www.pasternack.com | **E-Mail:** sales@pasternack.com

© 2013 Pasternack Enterprises All Rights Reserved