PASTERNACK®
THE ENGINEER'S RF SOURCE

# SC Male Connector Clamp/Solder Attachment for RG213, RG214, RG8, RG9, RG225, RG393, RG215



## Configuration

- SC Male Connector
- MIL-STD-348
- 50 Ohms
- Straight Body Geometry
- RG213, RG214, RG8, RG9, RG225, RG393, RG215 Interface Type
- Clamp/Solder Attachment

## Features

- Max. Operating Frequency 11 GHz
- Silver Plated Contact
- Contact plating according to QQ-S-365

## Applications

- General Purpose Test
- Custom Cable Assemblies

### Description

Pasternack's PE4520 SC male connector with clamp/solder attachment for RG213, RG214, RG8, RG9, RG225, RG393 and RG215 is part of our full line of RF components available for same-day shipping. Our SC male connector operates up to a maximum frequency of 11 GHz.

Our SC male connector PE4520 datasheet specifications and drawing with dimensions are shown below in this PDF. Pasternack's broad catalog of RF, microwave and millimeter wave connectors allows designers to configure and customize their signal connections however they like. Whether the need is to provide an I/O for a board design, or simply create a custom cable assembly configuration, Pasternack has the right connector for the job. Pasternack can also expertly build your custom cable assemblies for you and ship same-day.

### Electrical Specifications

| Description | Minimum | Typical | Maximum | Units |
|---|---|---|---|---|
| Frequency Range | DC | | 11 | GHz |
| Operating Voltage (AC) | | | 1,000 | Vrms |
| Dielectric Withstanding Voltage (AC) | | | 3,000 | Vrms |
| Insulation Resistance | 5,000 | | | MOhms |

### Mechanical Specifications

| | |
|---|---|
| **Size** | |
| Length | 1.5 in [38.1 mm] |
| Width/Dia. | 0.8 in [20.32 mm] |
| Weight | 0.11 lbs [49.9 g] |

Click the following link (or enter part number in "SEARCH" on website) to obtain additional part information including price, inventory and certifications: SC Male Connector Clamp/Solder Attachment for RG213, RG214, RG8, RG9, RG225, RG393, RG215 PE4520

Pasternack Enterprises, Inc. • P.O. Box 16759, Irvine, CA 92623
**Phone:** (866) 727-8376 or (949) 261-1920 • **Fax:** (949) 261-7451
Sales@Pasternack.com • Techsupport@Pasternack.com

© 2016 Pasternack Enterprises All Rights Reserved

# SC Male Connector Clamp/Solder Attachment for RG213, RG214, RG8, RG9, RG225, RG393, RG215



**Material Specifications**

| Description | Material | Plating |
|---|---|---|
| Contact | | Silver<br>QQ-S-365 |
| Insulation | PTFE | |
| Body | Brass | Nickel<br>QQ-N-290 |
| Coupling Nut | Brass | Nickel<br>QQ-N-290 |

## Environmental Specifications

**Temperature**

Operating Range -65 to +165 deg C

## Compliance Certifications (see product page for current document)

## Plotted and Other Data

Notes:

SC Male Connector Clamp/Solder Attachment for RG213, RG214, RG8, RG9, RG225, RG393, RG215 from Pasternack Enterprises has same day shipment for domestic and International orders. Our RF, microwave and millimeter wave products maintain a 99% availability and are part of the broadest selection in the industry.

Click the following link (or enter part number in "SEARCH" on website) to obtain additional part information including price, inventory and certifications: SC Male Connector Clamp/Solder Attachment for RG213, RG214, RG8, RG9, RG225, RG393, RG215 PE4520

URL: https://www.pasternack.com/sc-male-standard-rg213-rg214-rg8-rg9-rg225-rg393-connector-pe4520-p.aspx

The information contained in this document is accurate to the best of our knowledge and representative of the part described herein. It may be necessary to make modifications to the part and/or the documentation of the part, in order to implement improvements. Pasternack reserves the right to make such changes as required. Unless otherwise stated, all specifications are nominal. Pasternack does not make any representation or warranty regarding the suitability of the part described herein for any particular purpose, and Pasternack does not assume any liability arising out of the use of any part or documentation.

Pasternack Enterprises, Inc. • P.O. Box 16759, Irvine, CA 92623
**Phone:** (866) 727-8376 or (949) 261-1920 • **Fax:** (949) 261-7451
Sales@Pasternack.com • Techsupport@Pasternack.com

© 2016 Pasternack Enterprises All Rights Reserved

# PE4520 CAD Drawing

SC Male Connector Clamp/Solder Attachment for RG213, RG214, RG8, RG9, RG225, RG393, RG215

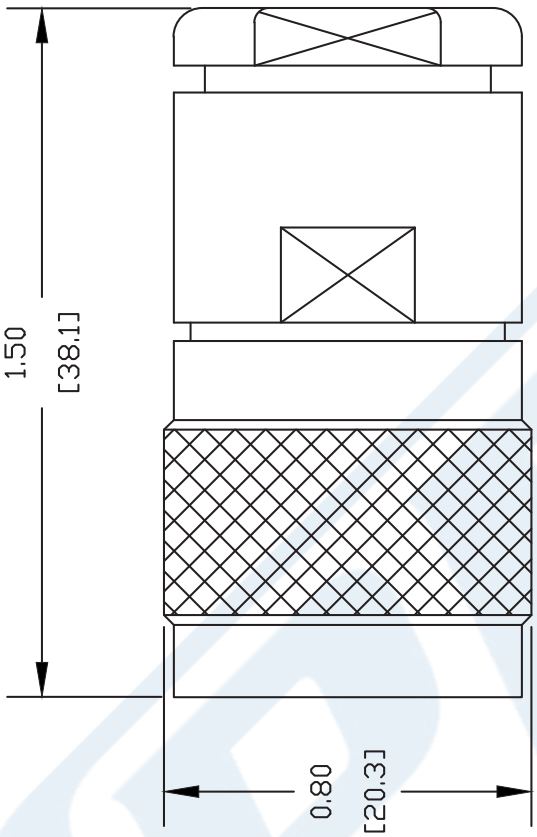


ASSEMBLY PROCEDURES

1. SLIDE CLAMP NUT (1) & GASKET (2) OVER CABLE. STRIP CABLE AS SHOWN. DO NOT NICK BRAID WHILE CUTTING JACKET. TAPER END OF BRAID TO PERMIT ASSEMBLY OF BRAID CLAMP (3) SLIDE BRAID CLAMP(3) OVER BRAID & SEAT AGAINST CABLE.

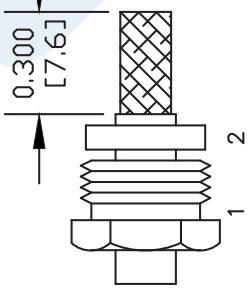


2. FORM BRAID OVER CLAMP NUT (3). TRIM BRAID BACK TO SHOULDER. CUT DIELECTRIC TO DIMENSION SHOWN. DO NOT NICK CENTER CONDUCTOR. SOLDER CONTACT TO CENTER CONDUCTOR. REMOVE EXCESS SOLDER. DO NOT OVER HEAT DIELECTRIC. INSERT CABLE ASSEMBLY INTO BODY & TIGHTEN.

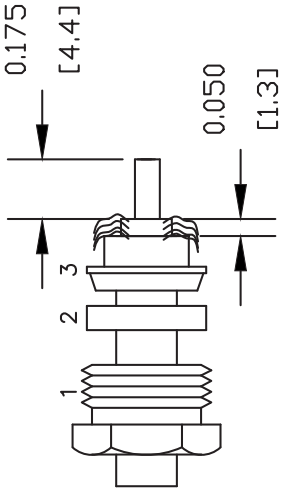


NOTES:
1. UNLESS OTHERWISE SPECIFIED ALL DIMENSIONS ARE NOMINAL.
2. ALL SPECIFICATIONS ARE SUBJECT TO CHANGE WITHOUT NOTICE AT ANY TIME.
3. DIMENSIONS ARE IN INCHES [mm].
4. FITS MIL-C-17 AND EQUIVALENT CABLES.

DWG TITLE **PE4520**

FSCM NO. 53919

CAD FILE 052102 | SCALE N/A | SIZE A | XXXX

PASTERNACK®
Pasternack Enterprises, Inc.
P.O. Box 16759 | Irvine | CA | 92623
**Phone:** (949) 261-1920 | **Fax:** (949) 261-7451
**Website:** www.pasternack.com | **E-Mail:** sales@pasternack.com

© 2016 Pasternack Enterprises All Rights Reserved

PASTERNACK®
THE ENGINEER'S RF SOURCE

# N Male Connector Crimp/Solder Attachment for RG213, RG215, RG8



## Configuration

- N Male Connector
- MIL-STD-348A
- 50 Ohms
- Straight Body Geometry
- RG213, RG215, RG8 Interface Type
- Crimp/Solder Attachment

## Features

- Max. Operating Frequency 10 GHz
- Good VSWR of 1.3:1
- Gold Plated Brass Contact
- 30 µin minimum contact plating

## Applications

- General Purpose Test
- Custom Cable Assemblies

### Description

Pasternack's PE4430 type N male connector with crimp/solder attachment for RG213, RG215 and RG8 is part of our full line of RF components available for same-day shipping. Our type N male connector operates up to a maximum frequency of 10 GHz and offers good VSWR of 1.3:1.

Our type N male connector PE4430 datasheet specifications and drawing with dimensions are shown below in this PDF. Pasternack's broad catalog of RF, microwave and millimeter wave connectors allows designers to configure and customize their signal connections however they like. Whether the need is to provide an I/O for a board design, or simply create a custom cable assembly configuration, Pasternack has the right connector for the job. Pasternack can also expertly build your custom cable assemblies for you and ship same-day.

### Electrical Specifications

| Description | Minimum | Typical | Maximum | Units |
|---|---|---|---|---|
| Frequency Range | DC | | 10 | GHz |
| VSWR | | | 1.3:1 | |
| Operating Voltage (AC) | | | 1,000 | Vrms |

### Mechanical Specifications

**Size**

| | |
|---|---|
| Length | 1.57 in [39.88 mm] |
| Width/Dia. | 0.787 in [19.99 mm] |
| Weight | 0.075 lbs [34.02 g] |

Click the following link (or enter part number in "SEARCH" on website) to obtain additional part information including price, inventory and certifications: N Male Connector Crimp/Solder Attachment for RG213, RG215, RG8 PE4430

Pasternack Enterprises, Inc. • P.O. Box 16759, Irvine, CA 92623
**Phone:** (866) 727-8376 or (949) 261-1920 • **Fax:** (949) 261-7451
Sales@Pasternack.com • Techsupport@Pasternack.com

© 2016 Pasternack Enterprises All Rights Reserved

# N Male Connector Crimp/Solder Attachment for RG213, RG215, RG8



**Material Specifications**

| Description | Material | Plating |
|---|---|---|
| Contact | Brass | Gold<br>30 µin minimum |
| Insulation | PTFE | |
| Body | Brass | Nickel<br>100 µin minimum |
| Coupling Nut | Brass | Nickel<br>100 µin minimum |
| Crimp Sleeve | Brass | Nickel |

## Environmental Specifications

**Temperature**

Operating Range -65 to +165 deg C

## Compliance Certifications (see product page for current document)

## Plotted and Other Data

Notes:

N Male Connector Crimp/Solder Attachment for RG213, RG215, RG8 from Pasternack Enterprises has same day shipment for domestic and International orders. Our RF, microwave and millimeter wave products maintain a 99% availability and are part of the broadest selection in the industry.

Click the following link (or enter part number in "SEARCH" on website) to obtain additional part information including price, inventory and certifications: N Male Connector Crimp/Solder Attachment for RG213, RG215, RG8 PE4430

URL: https://www.pasternack.com/n-male-standard-rg213-rg8-connector-pe4430-p.aspx

The information contained in this document is accurate to the best of our knowledge and representative of the part described herein. It may be necessary to make modifications to the part and/or the documentation of the part, in order to implement improvements. Pasternack reserves the right to make such changes as required. Unless otherwise stated, all specifications are nominal. Pasternack does not make any representation or warranty regarding the suitability of the part described herein for any particular purpose, and Pasternack does not assume any liability arising out of the use of any part or documentation.

Pasternack Enterprises, Inc. • P.O. Box 16759, Irvine, CA 92623
**Phone:** (866) 727-8376 or (949) 261-1920 • **Fax:** (949) 261-7451
Sales@Pasternack.com • Techsupport@Pasternack.com

© 2016 Pasternack Enterprises All Rights Reserved

# PE4430 CAD Drawing

N Male Connector Crimp/Solder Attachment for RG213, RG215, RG8

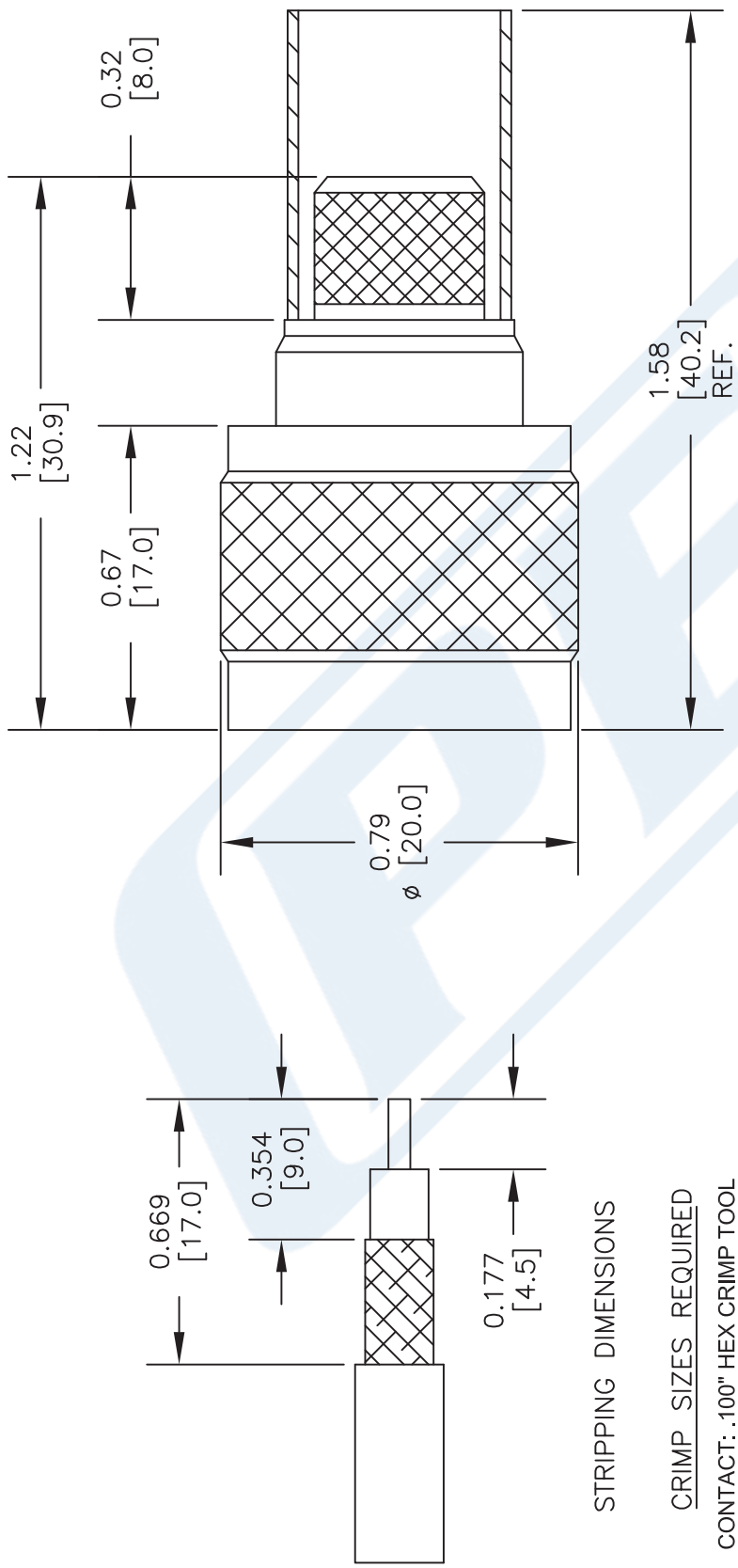


STRIPPING DIMENSIONS

CRIMP SIZES REQUIRED

CONTACT: .100" HEX CRIMP TOOL
FERRULE: .429" HEX CRIMP TOOL

NOTES:
1. UNLESS OTHERWISE SPECIFIED ALL DIMENSIONS ARE NOMINAL.
2. ALL SPECIFICATIONS ARE SUBJECT TO CHANGE WITHOUT NOTICE AT ANY TIME.
3. DIMENSIONS ARE IN INCHES [mm].
4. FITS MIL-C-17 AND EQUIVALENT CABLES.

DWG TITLE
PE4430

FSCM NO. 53919

CAD FILE 040714 | SCALE N/A | SIZE A | 2233

PASTERNACK®
THE ENGINEER'S RF SOURCE
Pasternack Enterprises, Inc.
P.O. Box 16759 | Irvine | CA | 92623
**Phone:** (949) 261-1920 | **Fax:** (949) 261-7451
**Website:** www.pasternack.com | **E-Mail:** sales@pasternack.com

© 2016 Pasternack Enterprises All Rights Reserved

PASTERNACK®
www.pasternack.com

# Flexible RG8 Coax Cable Single Shielded with Black PVC (NC) Jacket

## TECHNICAL DATA SHEET RG8A/U

Flexible RG8 Coax Cable Single Shielded with Black PVC (NC) Jacket

### Configuration

| | |
|---|---|
| Inner Conductor Material and Plating | Copper |
| Dielectric Type | PE (LD) |
| Shield Materials | Copper Braid |
| Jacket Material and Color | PVC (NC), Black |

### Electrical Specifications

| | |
|---|---|
| Impedance, Ohms | 50 |
| Velocity of Propagation, % | 66 |
| Maximum Operating Frequency, MHz | 1000 |
| Capacitance, pF/ft [pF/m] | 30.8 [101.05] |

**Electrical Specifications by Frequency**

| | |
|---|---|
| **Frequency 1** | |
| Frequency, MHz | 1 |
| Attenuation, dB/100ft [dB/100m] | 0.2 [0.66] |
| **Frequency 2** | |
| Frequency, MHz | 10 |
| Attenuation, dB/100ft [dB/100m] | 0.6 [1.97] |
| **Frequency 3** | |
| Frequency, MHz | 50 |
| Attenuation, dB/100ft [dB/100m] | 1.3 [4.27] |
| **Frequency 4** | |
| Frequency, MHz | 400 |
| Attenuation, dB/100ft [dB/100m] | 4.1 [13.45] |
| **Frequency 5** | |
| Frequency, MHz | 700 |
| Attenuation, dB/100ft [dB/100m] | 6.5 [21.33] |
| **Frequency 6** | |
| Frequency, MHz | 900 |
| Attenuation, dB/100ft [dB/100m] | 7.6 [24.93] |
| **Frequency 7** | |
| Frequency, MHz | 1000 |
| Attenuation, dB/100ft [dB/100m] | 8 [26.25] |

Click the following link (or enter part number in “SEARCH” on website) to obtain additional part information including price, inventory and certifications: Flexible RG8 Coax Cable Single Shielded with Black PVC (NC) Jacket RG8A/U

The information contained in this document is accurate to the best of our knowledge and representative of the part described herein. It may be necessary to make modifications to the part and/or the documentation of the part, in order to implement improvements. Pasternack reserves the right to make such changes as required. Unless otherwise stated, all specifications are nominal.

Pasternack Enterprises, Inc. • P.O. Box 16759, Irvine, CA 92623
**Phone:** (866) 727-8376 or (949) 261-1920 • **Fax:** (949) 261-7451
Sales@Pasternack.com • Techsupport@Pasternack.com

© 2013 Pasternack Enterprises All Rights Reserved

PASTERNACK®
www.pasternack.com

# Flexible RG8 Coax Cable Single Shielded with Black PVC (NC) Jacket

## TECHNICAL DATA SHEET RG8A/U

### Mechanical Specifications

| | |
|---|---|
| **Inner Conductor** | |
| Number of Strands | 7 |
| Material | Copper |
| Diameter, in [mm] | 0.085 [2.16] |
| **Dielectric:** | |
| Type | PE (LD) |
| Diameter, in [mm] | 0.285 [7.24] |
| **Shield:** | |
| Number of | 1 |
| Material 1 | Copper Braid |
| **Jacket:** | |
| Material | PVC (NC) |
| Diameter, in [mm] | 0.405 [10.29] |
| Color | Black |
| Weight, lbs/ft [Kg/m] | 0.12 [0.18] |

### Compliance Certifications (visit www.Pasternack.com for current document)

| | |
|---|---|
| RoHS Compliant | Yes |

### Plotted and Other Data

| | |
|---|---|
| Notes: | Values at 25 °C, sea level |

Flexible RG8 Coax Cable Single Shielded with Black PVC (NC) Jacket from Pasternack Enterprises has same day shipment for domestic and International orders. Our RF, microwave and fiber optic products maintain a 99% availability and are part of the broadest selection in the industry.

Click the following link (or enter part number in “SEARCH” on website) to obtain additional part information including price, inventory and certifications: Flexible RG8 Coax Cable Single Shielded with Black PVC (NC) Jacket RG8A/U

URL: http://www.pasternack.com/flexible-0.405-rg8-52-ohm-coax-cable-pvc-jacket-rg8a-u-p.aspx

The information contained in this document is accurate to the best of our knowledge and representative of the part described herein. It may be necessary to make modifications to the part and/or the documentation of the part, in order to implement improvements. Pasternack reserves the right to make such changes as required. Unless otherwise stated, all specifications are nominal.

Pasternack Enterprises, Inc. • P.O. Box 16759, Irvine, CA 92623
**Phone:** (866) 727-8376 or (949) 261-1920 • **Fax:** (949) 261-7451
Sales@Pasternack.com • Techsupport@Pasternack.com

© 2013 Pasternack Enterprises All Rights Reserved

# RG8A/U CAD Drawing

Flexible RG8 Coax Cable Single Shielded with Black PVC (NC) Jacket

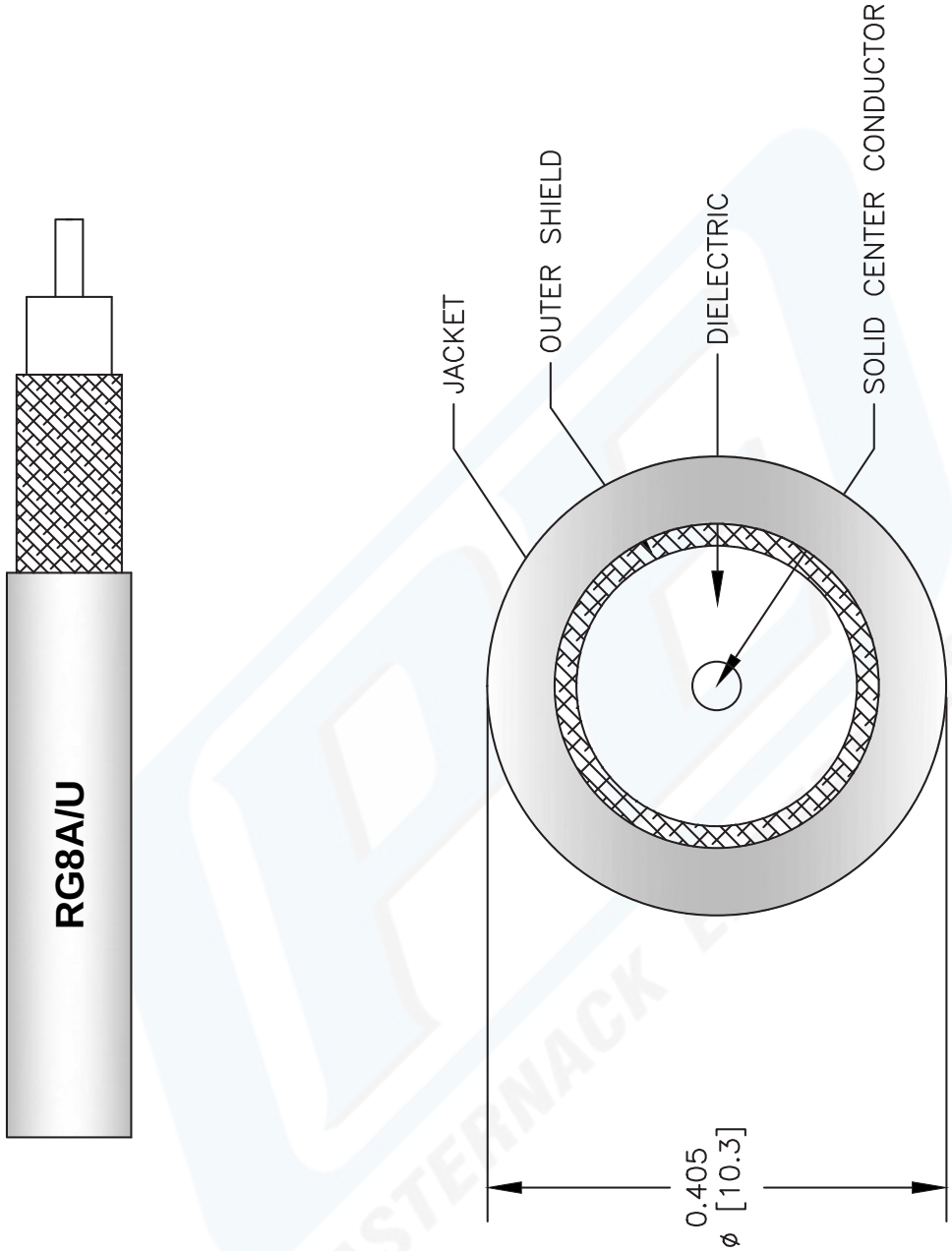


NOTES:
1. UNLESS OTHERWISE SPECIFIED ALL DIMENSIONS ARE NOMINAL.
2. ALL SPECIFICATIONS ARE SUBJECT TO CHANGE WITHOUT NOTICE AT ANY TIME.
3. DIMENSIONS ARE IN INCHES [mm].

DWG TITLE
RG8A/U

REV. C | FSCM NO. 53919 | CAD FILE 022513-C | SCALE N/A | SIZE A | XXXX

PASTERNACK®
Pasternack Enterprises, Inc.
P.O. Box 16759 | Irvine | CA | 92623
**Phone:** (949) 261-1920 | **Fax:** (949) 261-7451
**Website:** www.pasternack.com | **E-Mail:** sales@pasternack.com

© 2013 Pasternack Enterprises All Rights Reserved