PASTERNACK®
THE ENGINEER'S RF SOURCE

MMCX Plug Right Angle Connector Crimp/ Solder Attachment For RG316-DS

TECHNICAL DATA SHEET PE44784

Configuration

Connector	MMCX Plug
Connector Specification	BS EN 122340
Connector Interface Type	RG316-DS
Cable Attachment Method (Shield/Contact)	Crimp/Solder
Body Style	Right Angle

Electrical Specifications

Frequency Range, GHz	DC to 6
Impedance, Ohms	50
Maximum VSWR	1.35:1
Maximum Operating Voltage, Volts	250

Mechanical Specifications

Temperature

Operating Range, deg C	-55 to +155

Size

Length, in [mm]	0.53 [13.46]
Width/Dia., in [mm]	0.28 [7.11]
Weight, lbs [g]	0.003 [1.36]

Connector

Type	MMCX Plug
Contact Material and Plating	Brass, Gold
Contact Plating Specification	30µ in. minimum
Body Material and Plating	Brass, Gold
Body Plating Specification	3µ in. minimum
Dielectric Type	Teflon

Compliance Certifications (visit www.Pasternack.com for current document)

RoHS Compliant	Yes

Click the following link (or enter part number in "SEARCH" on website) to obtain additional part information including price, inventory and certifications: MMCX Plug Right Angle Connector Crimp/Solder Attachment For RG316-DS PE44784

The information contained in this document is accurate to the best of our knowledge and representative of the part described herein. It may be necessary to make modifications to the part and/or the documentation of the part, in order to implement improvements. Pasternack reserves the right to make such changes as required. Unless otherwise stated, all specifications are nominal.

Pasternack Enterprises, Inc. • P.O. Box 16759, Irvine, CA 92623
Phone: (866) 727-8376 or (949) 261-1920 • **Fax:** (949) 261-7451
Sales@Pasternack.com • Techsupport@Pasternack.com

© 2014 Pasternack Enterprises All Rights Reserved

MMCX Plug Right Angle Connector Crimp/ Solder Attachment For RG316-DS

Plotted and Other Data

Notes: Values at 25 °C, sea level

MMCX Plug Right Angle Connector Crimp/Solder Attachment For RG316-DS from Pasternack Enterprises has same day shipment for domestic and International orders. Our RF, microwave and fiber optic products maintain a 99% availability and are part of the broadest selection in the industry.

Click the following link (or enter part number in "SEARCH" on website) to obtain additional part information including price, inventory and certifications: MMCX Plug Right Angle Connector Crimp/Solder Attachment For RG316-DS PE44784

URL: http://www.pasternack.com/mmcx-plug-standard-rg316-ds-connector-pe44784-p.aspx

The information contained in this document is accurate to the best of our knowledge and representative of the part described herein. It may be necessary to make modifications to the part and/or the documentation of the part, in order to implement improvements. Pasternack reserves the right to make such changes as required. Unless otherwise stated, all specifications are nominal.

Pasternack Enterprises, Inc. • P.O. Box 16759, Irvine, CA 92623
Phone: (866) 727-8376 or (949) 261-1920 • **Fax:** (949) 261-7451
Sales@Pasternack.com • Techsupport@Pasternack.com

© 2014 Pasternack Enterprises All Rights Reserved

PE44784 CAD Drawing

MMCX Plug Right Angle Connector Crimp/Solder Attachment For RG316-DS

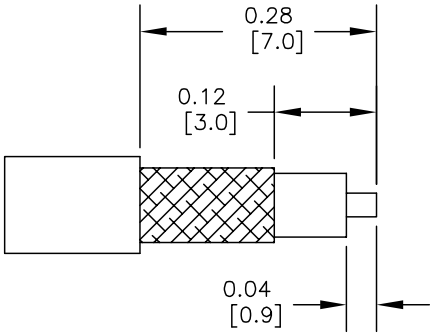

STRIPPING DIMENSIONS

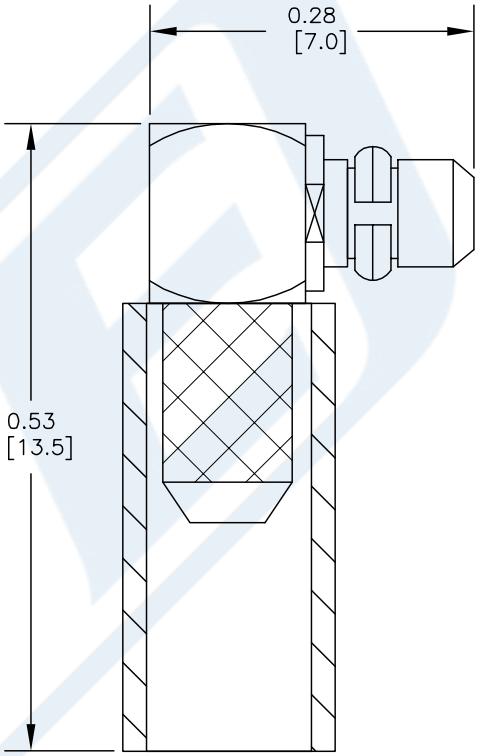

ASSEMBLY PROCEDURES

1. STRIP CABLE AS SHOWN. SLIDE FERRULE OVER CABLE.
2. INSTALL CABLE INTO BODY OF CONNECTOR AND SOFT SOLDER CENTER CONDUCTOR IN PLACE.
3. CRIMP FERRULE & PRESS CAP DOWN.

CRIMP SIZE REQUIRED

FERRULE: .128" HEX CRIMP TOOL

PASTERNACK® THE ENGINEER'S RF SOURCE
Pasternack Enterprises, Inc.
P.O. Box 16759 | Irvine | CA | 92623
Phone: (949) 261-1920 | **Fax:** (949) 261-7451
Website: www.pasternack.com | **E-Mail:** sales@pasternack.com

DWG TITLE

PE44784

NOTES:
1. UNLESS OTHERWISE SPECIFIED ALL DIMENSIONS ARE NOMINAL.
2. ALL SPECIFICATIONS ARE SUBJECT TO CHANGE WITHOUT NOTICE AT ANY TIME.
3. DIMENSIONS ARE IN INCHES [mm].
4. FITS MIL-C-17 AND EQUIVALENT CABLES.

FSCM NO. 53919	CAD FILE 021814	SCALE N/A	SIZE A	2233

© 2014 Pasternack Enterprises All Rights Reserved

PASTERNACK®
THE ENGINEER'S RF SOURCE

SSMB Plug Connector Crimp/Solder Attachment for RG188-DS, RG316-DS

RF Connectors Technical Data Sheet PE45153

Configuration

- SSMB Plug Connector
- MIL-STD-348A
- 50 Ohms
- Straight Body Geometry
- RG188-DS, RG316-DS Interface Type
- Crimp/Solder Attachment

Features

- Max. Operating Frequency 6 GHz
- Good VSWR of 1.3:1
- Gold Plated Beryllium Copper Contact
- 30µ in. minimum contact plating

Applications

- General Purpose Test
- Custom Cable Assemblies

Description

Pasternack's PE45153 SSMB plug connector with crimp/solder attachment for RG188-DS and RG316-DS is part of our full line of RF components available for same-day shipping. Our SSMB plug connector operates up to a maximum frequency of 6 GHz and offers good VSWR of 1.3:1.

Our SSMB plug connector PE45153 datasheet specifications and drawing with dimensions are shown below in this PDF. Pasternack's broad catalog of RF, microwave and millimeter wave connectors allows designers to configure and customize their signal connections however they like. Whether the need is to provide an I/O for a board design, or simply create a custom cable assembly configuration, Pasternack has the right connector for the job. Pasternack can also expertly build your custom cable assemblies for you and ship same-day.

Electrical Specifications

Description	Minimum	Typical	Maximum	Units
Frequency Range	DC		6	GHz
VSWR			1.3:1	
Operating Voltage (AC)			250	Vrms
Dielectric Withstanding Voltage (AC)			500	Vrms

Mechanical Specifications

Size

Length	0.9 in [22.86 mm]
Width/Dia.	0.184 in [4.67 mm]
Weight	0.01 lbs [4.54 g]

Click the following link (or enter part number in "SEARCH" on website) to obtain additional part information including price, inventory and certifications: SSMB Plug Connector Crimp/Solder Attachment for RG188-DS, RG316-DS PE45153

Pasternack Enterprises, Inc. • P.O. Box 16759, Irvine, CA 92623
Phone: (866) 727-8376 or (949) 261-1920 • **Fax:** (949) 261-7451
Sales@Pasternack.com • Techsupport@Pasternack.com

© 2016 Pasternack Enterprises All Rights Reserved

SSMB Plug Connector Crimp/Solder Attachment for RG188-DS, RG316-DS

Material Specifications

Description	Material	Plating
Contact	Beryllium Copper	Gold 30µ in. minimum
Insulation	Teflon	
Body	Beryllium Copper	Gold 30µ in. minimum

Environmental Specifications

Temperature

Operating Range -65 to +165 deg C

Compliance Certifications (see product page for current document)

Plotted and Other Data

Notes:

SSMB Plug Connector Crimp/Solder Attachment for RG188-DS, RG316-DS from Pasternack Enterprises has same day shipment for domestic and International orders. Our RF, microwave and millimeter wave products maintain a 99% availability and are part of the broadest selection in the industry.

Click the following link (or enter part number in "SEARCH" on website) to obtain additional part information including price, inventory and certifications: SSMB Plug Connector Crimp/Solder Attachment for RG188-DS, RG316-DS PE45153

URL: https://www.pasternack.com/ssmb-plug-rg316-ds-rg188-ds-connector-pe45153-p.aspx

The information contained in this document is accurate to the best of our knowledge and representative of the part described herein. It may be necessary to make modifications to the part and/or the documentation of the part, in order to implement improvements. Pasternack reserves the right to make such changes as required. Unless otherwise stated, all specifications are nominal. Pasternack does not make any representation or warranty regarding the suitability of the part described herein for any particular purpose, and Pasternack does not assume any liability arising out of the use of any part or documentation.

Pasternack Enterprises, Inc. • P.O. Box 16759, Irvine, CA 92623
Phone: (866) 727-8376 or (949) 261-1920 • **Fax:** (949) 261-7451
Sales@Pasternack.com • Techsupport@Pasternack.com

© 2016 Pasternack Enterprises All Rights Reserved

PE45153 CAD Drawing

SSMB Plug Connector Crimp/Solder Attachment for RG188-DS, RG316-DS

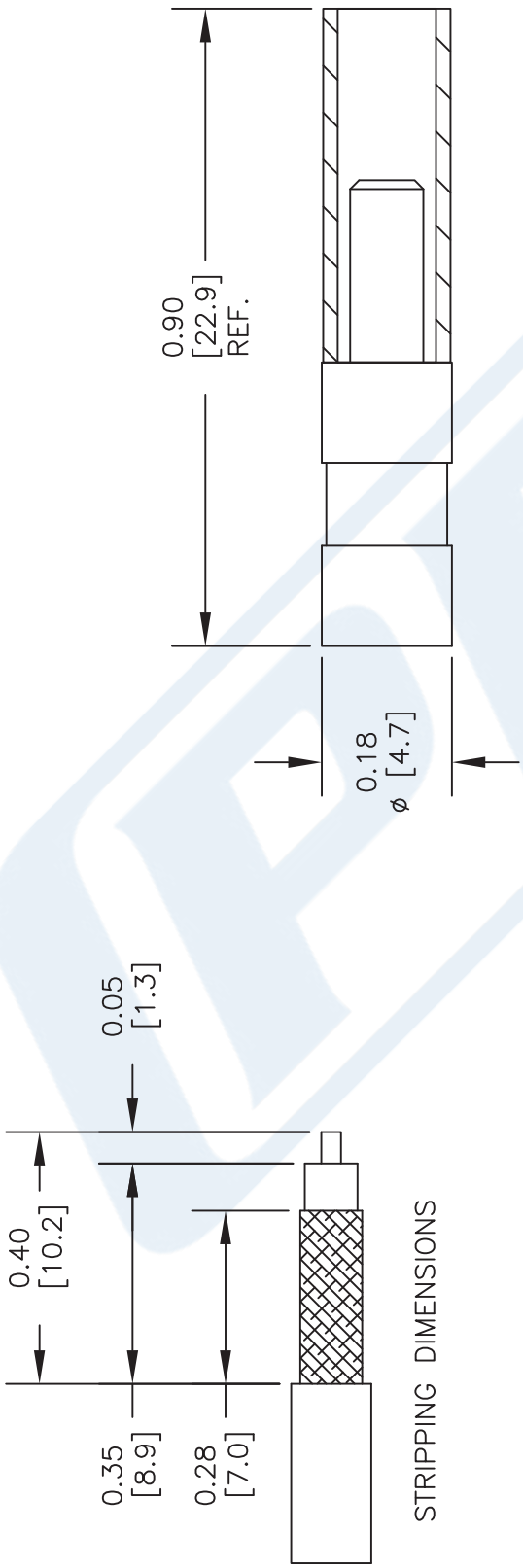

STRIPPING DIMENSIONS

CRIMP SIZE REQUIRED

CONTACT: SOLDER
FERRULE: 0.151" HEX CRIMP TOOL

NOTES:
1. UNLESS OTHERWISE SPECIFIED ALL DIMENSIONS ARE NOMINAL.
2. ALL SPECIFICATIONS ARE SUBJECT TO CHANGE WITHOUT NOTICE AT ANY TIME.
3. DIMENSIONS ARE IN INCHES [mm].
4. FITS MIL-C-17 AND EQUIVALENT CABLES.

DWG TITLE
PE45153

FSCM NO. 53919

CAD FILE 112216 | SCALE N/A | SIZE A | 2233

PASTERNACK®
THE ENGINEER'S RF SOURCE
Pasternack Enterprises, Inc.
P.O. Box 16759 | Irvine | CA | 92623
Phone: (949) 261-1920 | **Fax:** (949) 261-7451
Website: www.pasternack.com | **E-Mail:** sales@pasternack.com

© 2016 Pasternack Enterprises All Rights Reserved

PASTERNACK®
THE ENGINEER'S RF SOURCE

Flexible RG188 Coax Cable Double Shielded with White PTFE Jacket

Configuration

- Flexible Cable
- 2 Shield(s)

Electrical Specifications

Description	Minimum	Typical	Maximum	Units
Frequency Range	DC		10	GHz
Impedance		50		Ohms
Dielectric Withstanding Voltage (AC)			2,000	Vrms
Nominal Capacitance		32 [104.99]		pF/ft [pF/m]

Performance by Frequency Band

Description	F1	F2	F3	F4	F5	Units
Frequency	0.01	0.1	1	5	10	GHz
Attenuation, Typ	3.8	11.5	30	79	133	dB/100ft
	12.47	37.73	98.43	259.19	436.35	dB/100m
Input Power (CW), Max	1,250	450	160	57		Watts

Mechanical Specifications

Diameter	0.118 in [3 mm]
Weight	0.016 lbs/ft [0.02 Kg/m]

Construction Specifications

Description	Material and Plating	Diameter
Inner Conductor	Copper Clad Steel, Silver, 7 Strands	0.02 in [0.51 mm]
Conductor Type	Stranded	
Dielectric	PTFE	0.06 in [1.52 mm]
First Shield	Silver Plated Copper Braid 90% coverage	0.078 in [1.98 mm]

Click the following link (or enter part number in "SEARCH" on website) to obtain additional part information including price, inventory and certifications: Flexible RG188 Coax Cable Double Shielded with White PTFE Jacket RG188-DS

Pasternack Enterprises, Inc. • P.O. Box 16759, Irvine, CA 92623
Phone: (866) 727-8376 or (949) 261-1920 • **Fax:** (949) 261-7451
Sales@Pasternack.com • Techsupport@Pasternack.com

© 2017 Pasternack Enterprises All Rights Reserved

Second Shield	Silver Plated Copper Braid 90% coverage	0.096 in [2.44 mm]
Jacket	PTFE, White	0.118 in [3 mm]

Environmental Specifications

Temperature

Operating Range -55 to +200 deg C

Compliance Certifications (see product page for current document)

Plotted and Other Data

Notes:

Flexible RG188 Coax Cable Double Shielded with White PTFE Jacket from Pasternack Enterprises has same day shipment for domestic and International orders. Our RF, microwave and millimeter wave products maintain a 99.4% availability and are part of the broadest selection in the industry.

Click the following link (or enter part number in "SEARCH" on website) to obtain additional part information including price, inventory and certifications: Flexible RG188 Coax Cable Double Shielded with White PTFE Jacket RG188-DS

URL: https://www.pasternack.com/flexible-0.122-rg188-ds-50-ohm-coax-cable-ptfe-jacket-rg188-ds-p.aspx

The information contained in this document is accurate to the best of our knowledge and representative of the part described herein. It may be necessary to make modifications to the part and/or the documentation of the part, in order to implement improvements. Pasternack reserves the right to make such changes as required. Unless otherwise stated, all specifications are nominal. Pasternack does not make any representation or warranty regarding the suitability of the part described herein for any particular purpose, and Pasternack does not assume any liability arising out of the use of any part or documentation.

Pasternack Enterprises, Inc. • P.O. Box 16759, Irvine, CA 92623
Phone: (866) 727-8376 or (949) 261-1920 • **Fax:** (949) 261-7451
Sales@Pasternack.com • Techsupport@Pasternack.com

© 2017 Pasternack Enterprises All Rights Reserved

RG188-DS CAD Drawing

Flexible RG188 Coax Cable Double Shielded with White PTFE Jacket

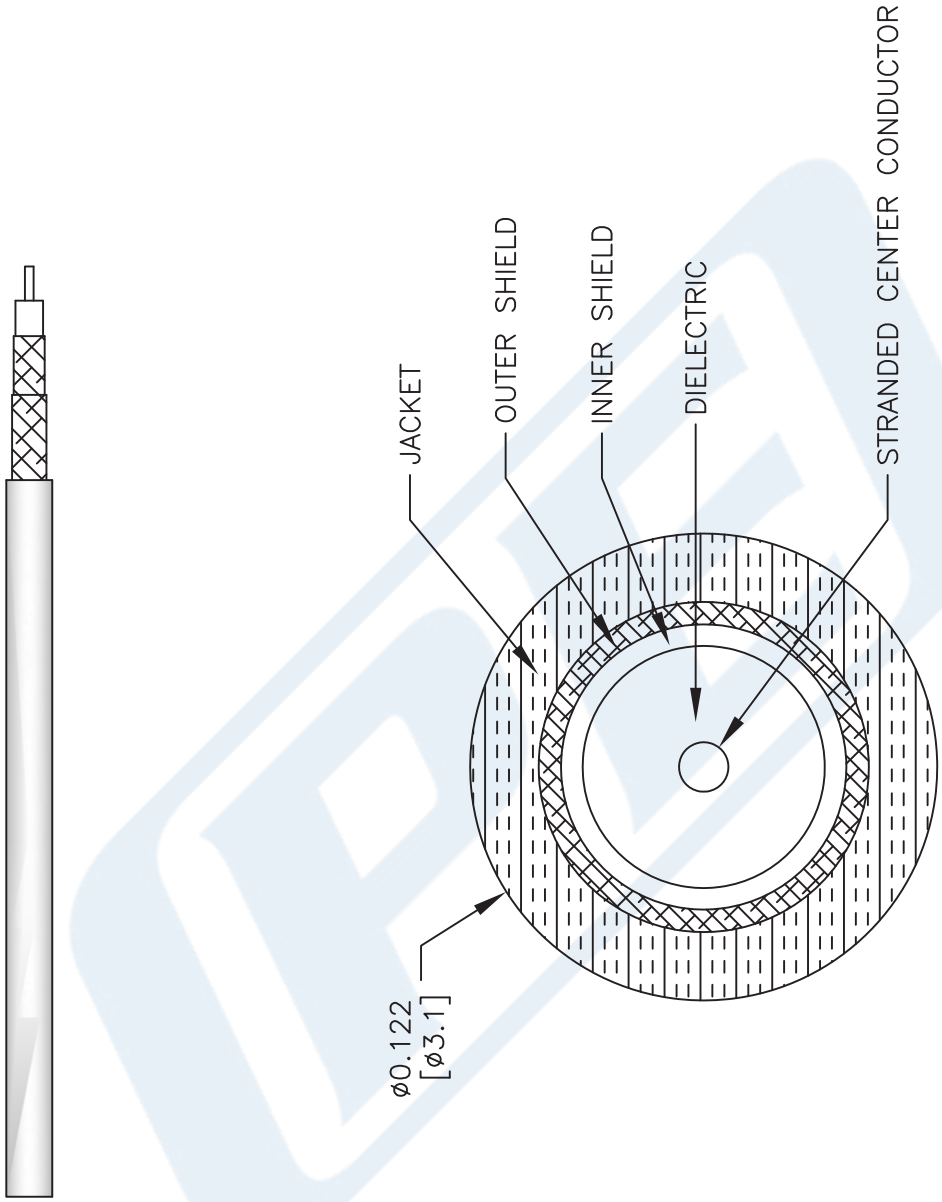

NOTES:
1. UNLESS OTHERWISE SPECIFIED ALL DIMENSIONS ARE NOMINAL.
2. ALL SPECIFICATIONS ARE SUBJECT TO CHANGE WITHOUT NOTICE AT ANY TIME.
3. DIMENSIONS ARE IN INCHES [mm].

DWG TITLE
RG188-DS

CAGE CODE 53919

CAD FILE 062817 | SCALE N/A | SIZE A | 2233

PASTERNACK®
THE ENGINEER'S RF SOURCE
Pasternack Enterprises, Inc.
P.O. Box 16759 | Irvine | CA | 92623
Phone: (949) 261-1920 | **Fax:** (949) 261-7451
Website: www.pasternack.com | **E-Mail:** sales@pasternack.com

© 2017 Pasternack Enterprises All Rights Reserved