PASTERNACK®
THE ENGINEER'S RF SOURCE

# SHV Plug Connector Crimp/Solder Attachment for RG58, RG303, RG141, PE-C195, PE-P195, LMR-195, 0.195 inch



## Configuration

- SHV Plug Connector
- MIL-STD-348A
- 50 Ohms
- Straight Body Geometry
- RG58, RG303, RG141, PE-C195, PE-P195, LMR-195, 0.195 inch Interface Type
- Crimp/Solder Attachment

## Features

- Max. Operating Frequency 300 MHz
- Good VSWR of 1.3:1
- Gold Plated Brass Contact
- 30 µin minimum contact plating

## Applications

- General Purpose Test
- Custom Cable Assemblies

### Description

Pasternack's PE4194 SHV plug connector with crimp/solder attachment for RG58, RG303, RG141, PE-C195, PE-P195, LMR-195 and 0.195 inch is part of our full line of RF components available for same-day shipping. Our SHV plug connector operates up to a maximum frequency of 300 MHz and offers good VSWR of 1.3:1.

Our SHV plug connector PE4194 datasheet specifications and drawing with dimensions are shown below in this PDF. Pasternack's broad catalog of RF, microwave and millimeter wave connectors allows designers to configure and customize their signal connections however they like. Whether the need is to provide an I/O for a board design, or simply create a custom cable assembly configuration, Pasternack has the right connector for the job. Pasternack can also expertly build your custom cable assemblies for you and ship same-day.

### Electrical Specifications

| Description | Minimum | Typical | Maximum | Units |
|---|---|---|---|---|
| Frequency Range | DC | | 300 | MHz |
| VSWR | | | 1.3:1 | |
| Operating Voltage (AC) | | | 1,400 | Vrms |

### Mechanical Specifications

**Size**

| | |
|---|---|
| Length | 1.778 in [45.16 mm] |
| Width/Dia. | 0.571 in [14.50 mm] |
| Weight | 0.035 lbs [15.88 g] |

Click the following link (or enter part number in "SEARCH" on website) to obtain additional part information including price, inventory and certifications: SHV Plug Connector Crimp/Solder Attachment for RG58, RG303, RG141, PE-C195, PE-P195, LMR-195, 0.195 inch PE4194

Pasternack Enterprises, Inc. • P.O. Box 16759, Irvine, CA 92623
**Phone:** (866) 727-8376 or (949) 261-1920 • **Fax:** (949) 261-7451
Sales@Pasternack.com • Techsupport@Pasternack.com

© 2016 Pasternack Enterprises All Rights Reserved

# SHV Plug Connector Crimp/Solder Attachment for RG58, RG303, RG141, PE-C195, PE-P195, LMR-195, 0.195 inch



**Material Specifications**

| Description | Material | Plating |
|---|---|---|
| Contact | Brass | Gold<br>30 µin minimum |
| Insulation | PTFE | |
| Body | Brass | Nickel<br>100 µin minimum |
| Coupling Nut | Brass | Nickel<br>100 µin minimum |
| Crimp Sleeve | Brass | Nickel |

## Environmental Specifications

**Temperature**

Operating Range -65 to +165 deg C

## Compliance Certifications (see product page for current document)

## Plotted and Other Data

Notes:

SHV Plug Connector Crimp/Solder Attachment for RG58, RG303, RG141, PE-C195, PE-P195, LMR-195, 0.195 inch from Pasternack Enterprises has same day shipment for domestic and International orders. Our RF, microwave and millimeter wave products maintain a 99% availability and are part of the broadest selection in the industry.

Click the following link (or enter part number in "SEARCH" on website) to obtain additional part information including price, inventory and certifications: SHV Plug Connector Crimp/Solder Attachment for RG58, RG303, RG141, PE-C195, PE-P195, LMR-195, 0.195 inch PE4194

URL: https://www.pasternack.com/shv-plug-standard-rg58-connector-pe4194-p.aspx

The information contained in this document is accurate to the best of our knowledge and representative of the part described herein. It may be necessary to make modifications to the part and/or the documentation of the part, in order to implement improvements. Pasternack reserves the right to make such changes as required. Unless otherwise stated, all specifications are nominal. Pasternack does not make any representation or warranty regarding the suitability of the part described herein for any particular purpose, and Pasternack does not assume any liability arising out of the use of any part or documentation.

Pasternack Enterprises, Inc. • P.O. Box 16759, Irvine, CA 92623
**Phone:** (866) 727-8376 or (949) 261-1920 • **Fax:** (949) 261-7451
Sales@Pasternack.com • Techsupport@Pasternack.com

© 2016 Pasternack Enterprises All Rights Reserved

# PE4194 CAD Drawing

SHV Plug Connector Crimp/Solder Attachment for RG58, RG303, RG141, PE-C195, PE-P195, LMR-195, 0.195 inch

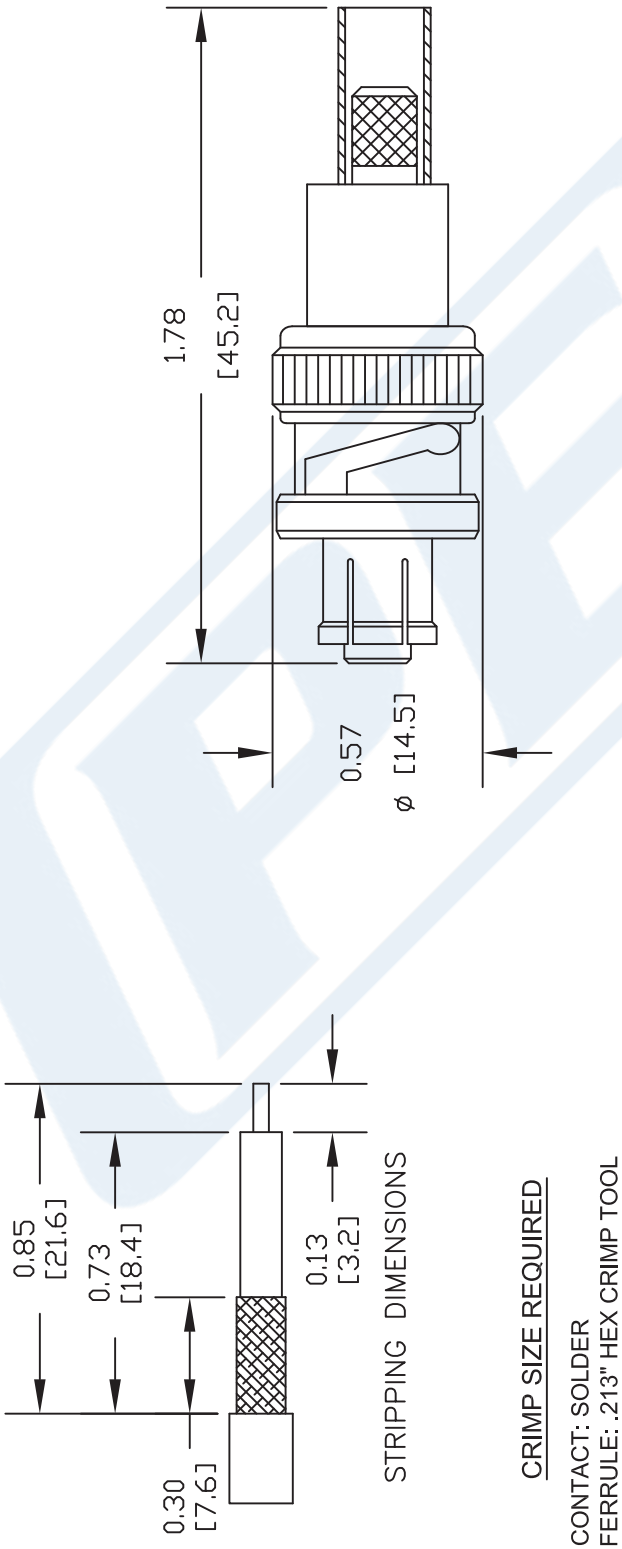


NOTES:
1. UNLESS OTHERWISE SPECIFIED ALL DIMENSIONS ARE NOMINAL.
2. ALL SPECIFICATIONS ARE SUBJECT TO CHANGE WITHOUT NOTICE AT ANY TIME.
3. DIMENSIONS ARE IN INCHES [mm].
4. FITS MIL-C-17 AND EQUIVALENT CABLES.

DWG TITLE **PE4194**

| REV. - | FSCM NO. 53919 | CAD FILE 042309 | SCALE N/A | SIZE A | 147 |
|---|---|---|---|---|---|


PASTERNACK®
Pasternack Enterprises, Inc.
P.O. Box 16759 | Irvine | CA | 92623
**Phone:** (949) 261-1920 | **Fax:** (949) 261-7451
**Website:** www.pasternack.com | **E-Mail:** sales@pasternack.com


© 2016 Pasternack Enterprises All Rights Reserved

PASTERNACK®
THE ENGINEER'S RF SOURCE

# Double Banana Plug Connector Crimp/Solder Attachment for PE-C195, PE-P195, RG58, RG141, RG303, LMR-195, .195 inch

RF Connectors Technical Data Sheet PE4301

## Configuration

- Double Banana Plug Connector
- Straight Body Geometry
- PE-C195, PE-P195, RG58, RG141, RG303, LMR-195, .195 inch Interface Type
- Crimp/Solder Attachment

## Features

- Nickel Plated Brass Contact

## Applications

- General Purpose Test
- Custom Cable Assemblies

### Description

Pasternack's PE4301 Double Banana plug connector with crimp/solder attachment for PE-C195, PE-P195, RG58, RG141, RG303, LMR-195 and .195 inch is part of our full line of RF components available for same-day shipping.

Our Double Banana plug connector PE4301 datasheet specifications and drawing with dimensions are shown below in this PDF. Pasternack's broad catalog of RF, microwave and millimeter wave connectors allows designers to configure and customize their signal connections however they like. Whether the need is to provide an I/O for a board design, or simply create a custom cable assembly configuration, Pasternack has the right connector for the job. Pasternack can also expertly build your custom cable assemblies for you and ship same-day.

### Mechanical Specifications

**Size**

| | |
|---|---|
| Length | 2.5 in [63.5 mm] |
| Width/Dia. | 1.175 in [29.85 mm] |
| Weight | 0.041 lbs [18.6 g] |

**Material Specifications**

| Description | Material | Plating |
|---|---|---|
| Contact | Brass | Nickel |
| Insulation | ABS | |
| Body | Brass | Nickel |

Click the following link (or enter part number in "SEARCH" on website) to obtain additional part information including price, inventory and certifications: Double Banana Plug Connector Crimp/Solder Attachment for PE-C195, PE-P195, RG58, RG141, RG303, LMR-195, .195 inch PE4301

Pasternack Enterprises, Inc. • P.O. Box 16759, Irvine, CA 92623
**Phone:** (866) 727-8376 or (949) 261-1920 • **Fax:** (949) 261-7451
Sales@Pasternack.com • Techsupport@Pasternack.com

© 2016 Pasternack Enterprises All Rights Reserved

# Double Banana Plug Connector Crimp/Solder Attachment for PE-C195, PE-P195, RG58, RG141, RG303, LMR-195, .195 inch



**Compliance Certifications** (see product page for current document)

**Plotted and Other Data**

Notes:

Double Banana Plug Connector Crimp/Solder Attachment for PE-C195, PE-P195, RG58, RG141, RG303, LMR-195, .195 inch from Pasternack Enterprises has same day shipment for domestic and International orders. Our RF, microwave and millimeter wave products maintain a 99% availability and are part of the broadest selection in the industry.

Click the following link (or enter part number in "SEARCH" on website) to obtain additional part information including price, inventory and certifications: Double Banana Plug Connector Crimp/Solder Attachment for PE-C195, PE-P195, RG58, RG141, RG303, LMR-195, .195 inch PE4301

URL: https://www.pasternack.com/banana-plug-standard-rg58-connector-pe4301-p.aspx

The information contained in this document is accurate to the best of our knowledge and representative of the part described herein. It may be necessary to make modifications to the part and/or the documentation of the part, in order to implement improvements. Pasternack reserves the right to make such changes as required. Unless otherwise stated, all specifications are nominal. Pasternack does not make any representation or warranty regarding the suitability of the part described herein for any particular purpose, and Pasternack does not assume any liability arising out of the use of any part or documentation.

Pasternack Enterprises, Inc. • P.O. Box 16759, Irvine, CA 92623
**Phone:** (866) 727-8376 or (949) 261-1920 • **Fax:** (949) 261-7451
Sales@Pasternack.com • Techsupport@Pasternack.com

© 2016 Pasternack Enterprises All Rights Reserved

# PE4301 CAD Drawing

Double Banana Plug Connector Crimp/Solder Attachment for PE-C195, PE-P195, RG58, RG141, RG303, LMR-195, .195 inch

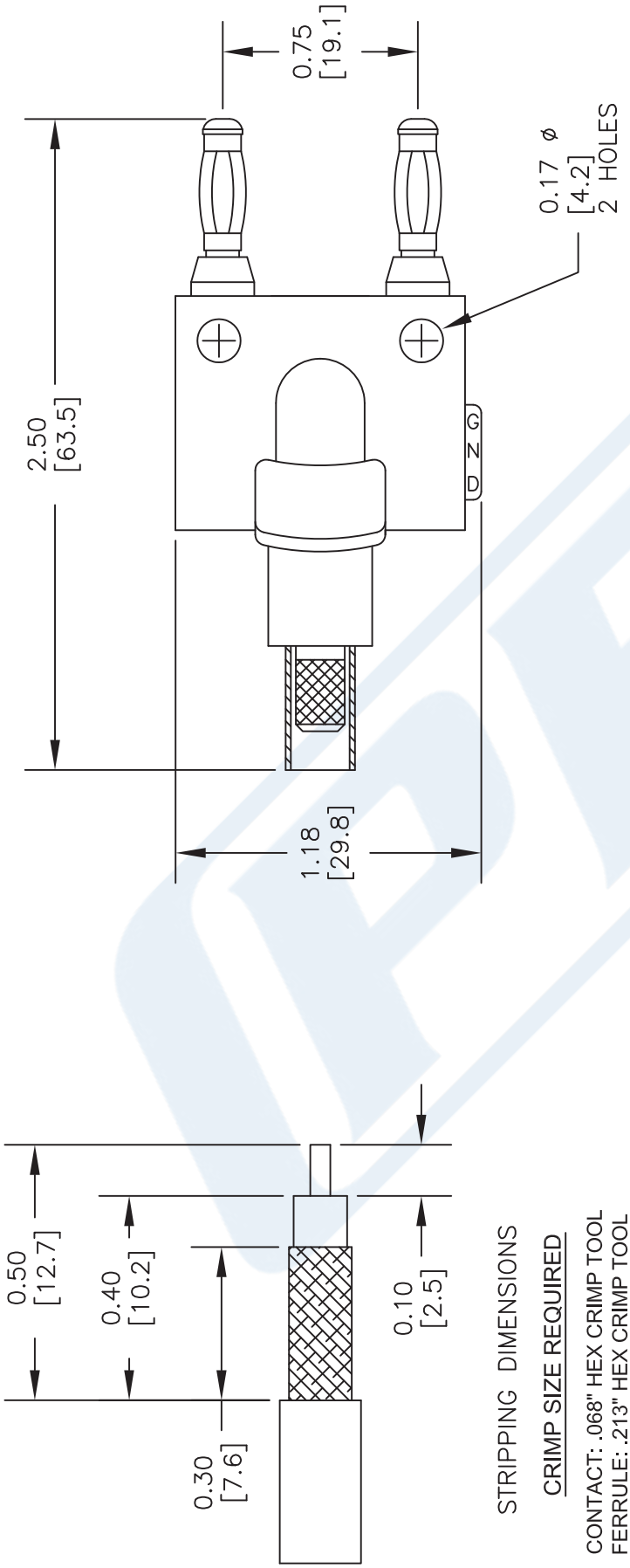


NOTES:
1. UNLESS OTHERWISE SPECIFIED ALL DIMENSIONS ARE NOMINAL.
2. ALL SPECIFICATIONS ARE SUBJECT TO CHANGE WITHOUT NOTICE AT ANY TIME.
3. DIMENSIONS ARE IN INCHES [mm].
4. FITS MIL-C-17 AND EQUIVALENT CABLES.

DWG TITLE
PE4301

| REV. - | FSCM NO. 53919 | CAD FILE 010306 | SCALE N/A | SIZE A | 2233 |
|---|---|---|---|---|---|

PASTERNACK®
Pasternack Enterprises, Inc.
P.O. Box 16759 | Irvine | CA | 92623
**Phone:** (949) 261-1920 | **Fax:** (949) 261-7451
**Website:** www.pasternack.com | **E-Mail:** sales@pasternack.com

© 2016 Pasternack Enterprises All Rights Reserved

PASTERNACK®
THE ENGINEER'S RF SOURCE

# Flexible RG141 Coax Cable Single Shielded with Beige PTFE (Fiberglass reinforced) Jacket



## Configuration

- Flexible Cable
- 1 Shield(s)

### Electrical Specifications

| Description | Minimum | Typical | Maximum | Units |
|---|---|---|---|---|
| Frequency Range | DC | | 10 | GHz |
| Impedance | | 50 ±2 | | Ohms |
| Velocity of Propagation | | 70 | | % |
| Dielectric Withstanding Voltage (AC) | | | 5,000 | Vrms |
| Jacket Spark | | | 2,000 | Vrms |
| Nominal Capacitance | | 29.4 [96.46] | | pF/ft [pF/m] |

### Performance by Frequency Band

| Description | F1 | F2 | F3 | F4 | F5 | Units |
|---|---|---|---|---|---|---|
| Frequency | 0.01 | 0.1 | 1 | 5 | 10 | GHz |
| Attenuation, Typ | 1.2 | 3.9 | 13 | 36 | 62 | dB/100ft |
| | 3.94 | 12.8 | 42.65 | 118.11 | 203.41 | dB/100m |

### Mechanical Specifications

| | |
|---|---|
| Diameter | 0.19 in [4.83 mm] |
| Weight | 0.033 lbs/ft [0.05 Kg/m] |

### Construction Specifications

| Description | Material and Plating | Diameter |
|---|---|---|
| Inner Conductor | Copper Clad Steel, Silver, 1 Strands | 0.037 in [0.94 mm] |
| Conductor Type | Solid | |
| Dielectric | PTFE | 0.116 in [2.95 mm] |
| First Shield | Silver Plated Copper | |

Click the following link (or enter part number in "SEARCH" on website) to obtain additional part information including price, inventory and certifications: Flexible RG141 Coax Cable Single Shielded with Beige PTFE (FG) Jacket RG141A/U

Pasternack Enterprises, Inc. • P.O. Box 16759, Irvine, CA 92623
**Phone:** (866) 727-8376 or (949) 261-1920 • **Fax:** (949) 261-7451
Sales@Pasternack.com • Techsupport@Pasternack.com

© 2017 Pasternack Enterprises All Rights Reserved

# Flexible RG141 Coax Cable Single Shielded with Beige PTFE (Fiberglass reinforced) Jacket



| | | |
|---|---|---|
| Jacket | PTFE (FG), Beige | 0.19 in [4.83 mm] |

## Environmental Specifications

**Temperature**

| | |
|---|---|
| Operating Range | -55 to +200 deg C |

**Compliance Certifications** (see product page for current document)

## Plotted and Other Data

Notes:

Flexible RG141 Coax Cable Single Shielded with Beige PTFE (Fiberglass reinforced) Jacket from Pasternack Enterprises has same day shipment for domestic and International orders. Our RF, microwave and millimeter wave products maintain a 99.4% availability and are part of the broadest selection in the industry.

Click the following link (or enter part number in "SEARCH" on website) to obtain additional part information including price, inventory and certifications: Flexible RG141 Coax Cable Single Shielded with Beige PTFE (FG) Jacket RG141A/U

URL: https://www.pasternack.com/flexible-0.190-rg141-50-ohm-coax-cable-ptfe-fr-jacket-rg141a-u-p.aspx

The information contained in this document is accurate to the best of our knowledge and representative of the part described herein. It may be necessary to make modifications to the part and/or the documentation of the part, in order to implement improvements. Pasternack reserves the right to make such changes as required. Unless otherwise stated, all specifications are nominal. Pasternack does not make any representation or warranty regarding the suitability of the part described herein for any particular purpose, and Pasternack does not assume any liability arising out of the use of any part or documentation.

Pasternack Enterprises, Inc. • P.O. Box 16759, Irvine, CA 92623
**Phone:** (866) 727-8376 or (949) 261-1920 • **Fax:** (949) 261-7451
Sales@Pasternack.com • Techsupport@Pasternack.com

© 2017 Pasternack Enterprises All Rights Reserved

# RG141A/U CAD Drawing

Flexible RG141 Coax Cable Single Shielded with Beige
PTFE (Fiberglass reinforced) Jacket

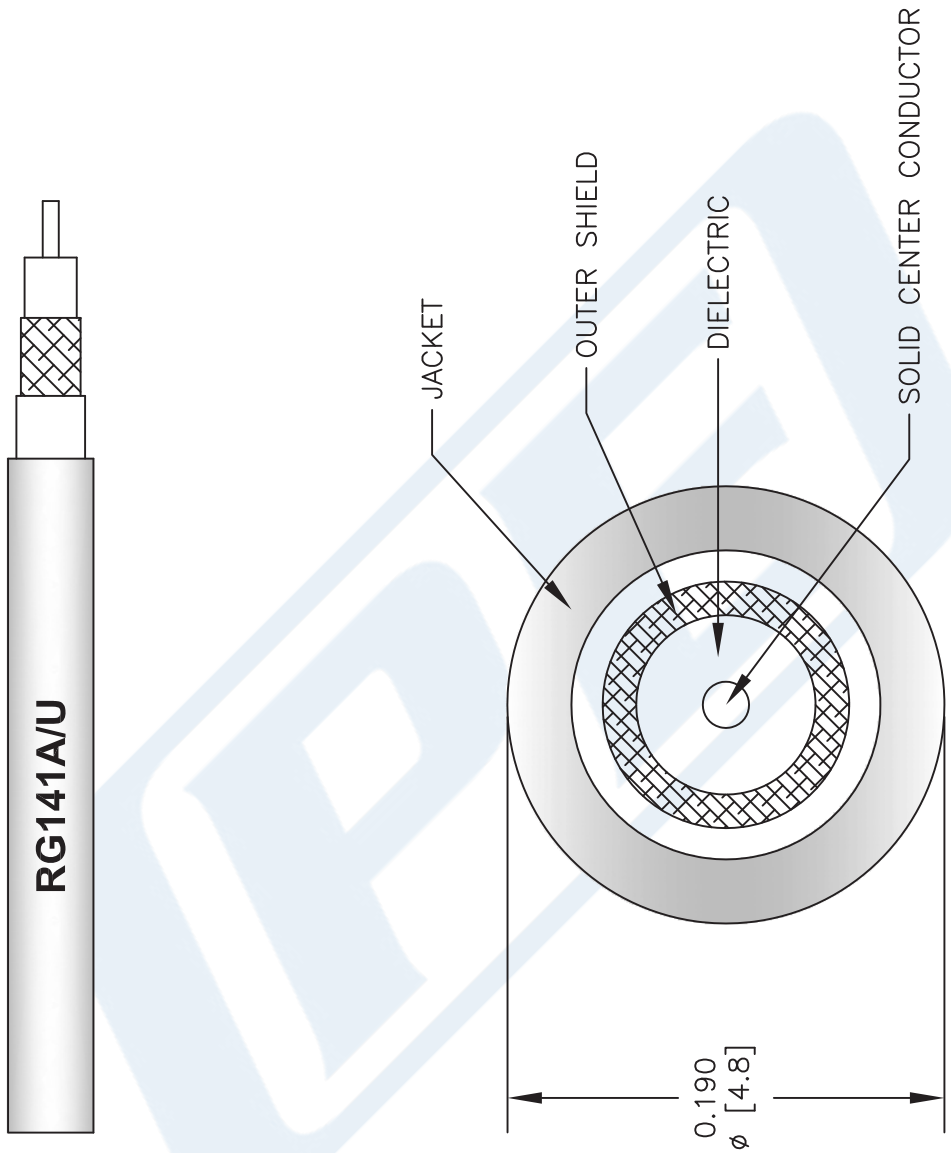


NOTES:
1. UNLESS OTHERWISE SPECIFIED ALL DIMENSIONS ARE NOMINAL.
2. ALL SPECIFICATIONS ARE SUBJECT TO CHANGE WITHOUT NOTICE AT ANY TIME.
3. DIMENSIONS ARE IN INCHES [mm].

DWG TITLE
RG141A/U

REV. A | FSCM NO. 53919 | CAD FILE 022808-A | SCALE N/A | SIZE A | 147

PASTERNACK®
Pasternack Enterprises, Inc.
P.O. Box 16759 | Irvine | CA | 92623
**Phone:** (949) 261-1920 | **Fax:** (949) 261-7451
**Website:** www.pasternack.com | **E-Mail:** sales@pasternack.com

© 2017 Pasternack Enterprises All Rights Reserved