HN Male Right Angle Connector Clamp/Solder Attachment for RG55, RG58, RG141, RG142, RG223, RG303, RG400, PE-C195, PE-P195, LMR-195

RF Connectors Technical Data Sheet PE4480

Configuration

- HN Male Connector
- MIL-STD-348
- 50 Ohms
- Right Angle Body Geometry
- RG55, RG58, RG141, RG142, RG223, RG303, RG400, PE-C195, PE-P195, LMR-195 Interface Type
- Clamp/Solder Attachment

Features

- Silver Plated Contact
- Contact plating according to QQ-S-365

Applications

- General Purpose Test
- Custom Cable Assemblies

Description

Pasternack's PE4480 HN male right angle connector with clamp/solder attachment for RG55, RG58, RG141, RG142, RG223, RG303, RG400, PE-C195, PE-P195 and LMR-195 is part of our full line of RF components available for same-day shipping. Its right angle body geometry allows for easier connections in tight spaces.

Our HN male right angle connector PE4480 datasheet specifications and drawing with dimensions are shown below in this PDF. Pasternack's broad catalog of RF, microwave and millimeter wave connectors allows designers to configure and customize their signal connections however they like. Whether the need is to provide an I/O for a board design, or simply create a custom cable assembly configuration, Pasternack has the right connector for the job. Pasternack can also expertly build your custom cable assemblies for you and ship same-day.

Mechanical Specifications

Size	
Length	1.75 in [44.45 mm]
Width/Dia.	0.9 in [22.86 mm]
Height	1.465 in [37.21 mm]
Weight	0.178 lbs [80.74 g]

Click the following link (or enter part number in "SEARCH" on website) to obtain additional part information including price, inventory and certifications: HN Male Right Angle Connector Clamp/Solder Attachment for RG55, RG58, RG141, RG142, RG223, RG303, RG400, PE-C195, PE-P195, LMR-195 PE4480

Pasternack Enterprises, Inc. • P.O. Box 16759, Irvine, CA 92623
Phone: (866) 727-8376 or (949) 261-1920 • **Fax:** (949) 261-7451
Sales@Pasternack.com • Techsupport@Pasternack.com

© 2016 Pasternack Enterprises All Rights Reserved

HN Male Right Angle Connector Clamp/Solder Attachment for RG55, RG58, RG141, RG142, RG223, RG303, RG400, PE-C195, PE-P195, LMR-195

Material Specifications

Description	Material	Plating
Contact		Silver QQ-S-365
Insulation	PTFE	
Body	Brass	Nickel QQ-N-290
Coupling Nut	Brass	Nickel QQ-N-290

Environmental Specifications

Temperature

Operating Range -65 to +165 deg C

Compliance Certifications (see product page for current document)

Plotted and Other Data

Notes:

HN Male Right Angle Connector Clamp/Solder Attachment for RG55, RG58, RG141, RG142, RG223, RG303, RG400, PE-C195, PE-P195, LMR-195 from Pasternack Enterprises has same day shipment for domestic and International orders. Our RF, microwave and millimeter wave products maintain a 99% availability and are part of the broadest selection in the industry.

Click the following link (or enter part number in "SEARCH" on website) to obtain additional part information including price, inventory and certifications: HN Male Right Angle Connector Clamp/Solder Attachment for RG55, RG58, RG141, RG142, RG223, RG303, RG400, PE-C195, PE-P195, LMR-195 PE4480

URL: https://www.pasternack.com/hn-male-standard-rg58-rg55-rg141-rg142-rg223-rg400-connector-pe4480-p.aspx

The information contained in this document is accurate to the best of our knowledge and representative of the part described herein. It may be necessary to make modifications to the part and/or the documentation of the part, in order to implement improvements. Pasternack reserves the right to make such changes as required. Unless otherwise stated, all specifications are nominal. Pasternack does not make any representation or warranty regarding the suitability of the part described herein for any particular purpose, and Pasternack does not assume any liability arising out of the use of any part or documentation.

Pasternack Enterprises, Inc. • P.O. Box 16759, Irvine, CA 92623
Phone: (866) 727-8376 or (949) 261-1920 • **Fax:** (949) 261-7451
Sales@Pasternack.com • Techsupport@Pasternack.com

© 2016 Pasternack Enterprises All Rights Reserved

PE4480 CAD Drawing

HN Male Right Angle Connector Clamp/Solder Attachment for RG55, RG58, RG141, RG142, RG223, RG303, RG400, PE-C195, PE-P195, LMR-195

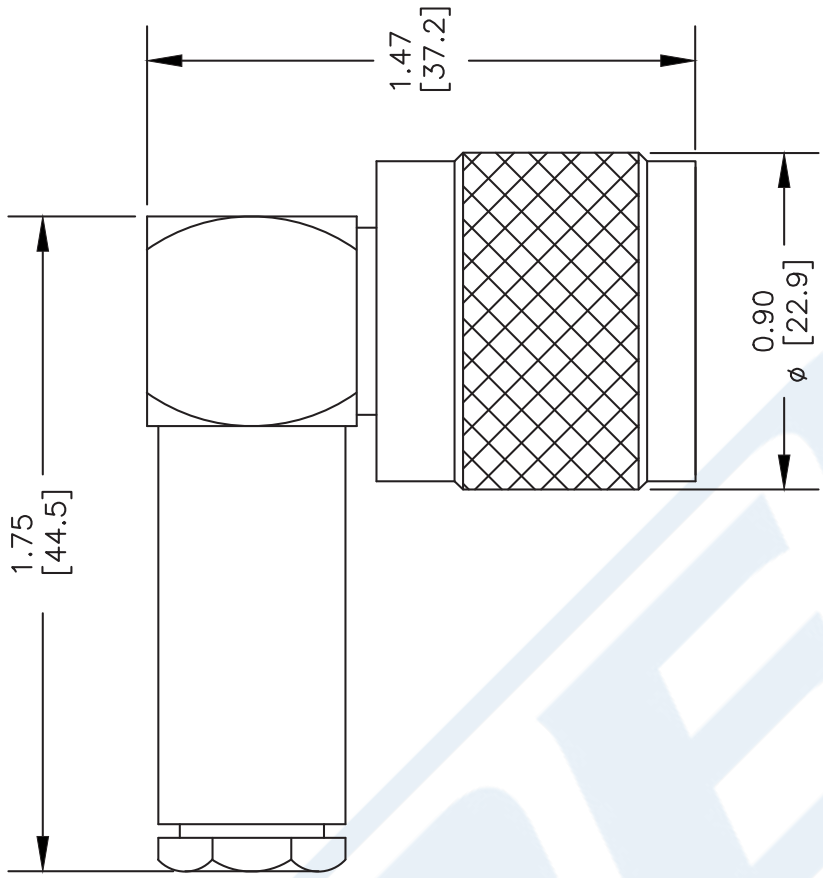

ASSEMBLY PROCEDURES

1. SLIDE CLAMP NUT (1), WASHER (2) & GASKET (3) OVER CABLE. STRIP CABLE AS SHOWN. DO NOT NICK BRAID WHILE CUTTING JACKET. TAPER END OF BRAID TO PERMIT ASSEMBLY OF BRAID CLAMP (4). SLIDE BRAID CLAMP (4) OVER BRAID & SEAT AGAINST CABLE.

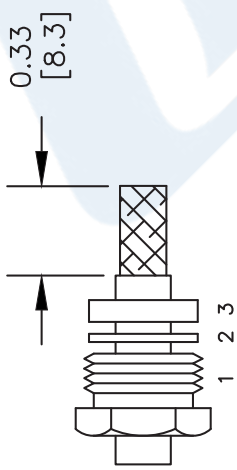

2. FORM BRAID OVER CLAMP NUT (4). TRIM BRAID BACK TO SHOULDER. CUT DIELECTRIC & CENTER CONDUCTOR TO DIMENSION SHOWN. DO NOT NICK CENTER CONDUCTOR. SOLDER CONTACT TO CENTER CONDUCTOR. REMOVE EXCESS SOLDER. DO NOT OVER HEAT DIELECTRIC. INSERT CABLE ASSEMBLY INTO BODY & TIGHTEN.

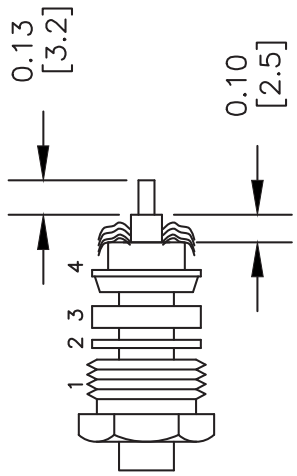

NOTES:
1. UNLESS OTHERWISE SPECIFIED ALL DIMENSIONS ARE NOMINAL.
2. ALL SPECIFICATIONS ARE SUBJECT TO CHANGE WITHOUT NOTICE AT ANY TIME.
3. DIMENSIONS ARE IN INCHES [mm].
4. FITS MIL-C-17 AND EQUIVALENT CABLES.

DWG TITLE **PE4480**

REV. -	FSCM NO. 53919	CAD FILE 051602	SCALE N/A	SIZE A	2233

PASTERNACK®
Pasternack Enterprises, Inc.
P.O. Box 16759 | Irvine | CA | 92623
Phone: (949) 261-1920 | **Fax:** (949) 261-7451
Website: www.pasternack.com | **E-Mail:** sales@pasternack.com

© 2016 Pasternack Enterprises All Rights Reserved

PASTERNACK®
THE ENGINEER'S RF SOURCE

N Male Connector Crimp/Solder Attachment For RG223, RG142, RG400, RG55

TECHNICAL DATA SHEET PE44788

Configuration

Connector	N Male
Connector Specification	MIL-STD-348A
Connector Interface Type	RG223,RG142,RG400,RG55
Cable Attachment Method (Shield/Contact)	Crimp/Solder
Body Style	Straight

Electrical Specifications

Frequency Range, GHz	DC to 11
Impedance, Ohms	50
Maximum Operating Voltage, Volts	1,500

Frequency 1

Frequency, GHz	DC to 6
VSWR	1.3:1

Mechanical Specifications

Temperature

Operating Range, deg C	-65 to +165

Size

Length, in [mm]	1.37 [34.8]
Width/Dia., in [mm]	0.83 [21.08]
Weight, lbs [g]	0.06 [27.22]

Connector

Type	N Male
Contact Material and Plating	Brass, Gold
Coupling Nut Material and Plating	Brass, Tri-Metal
Hex Size, mm	18
Torque, in-lbs [Nm]	9 [1.02]
Body Material and Plating	Brass, Tri-Metal
Dielectric Type	Teflon

Compliance Certifications (visit www.Pasternack.com for current document)

RoHS Compliant	Yes
REACH Compliant	06/18/2012

Click the following link (or enter part number in "SEARCH" on website) to obtain additional part information including price, inventory and certifications: N Male Connector Crimp/Solder Attachment For RG223, RG142, RG400, RG55 PE44788

The information contained in this document is accurate to the best of our knowledge and representative of the part described herein. It may be necessary to make modifications to the part and/or the documentation of the part, in order to implement improvements. Pasternack reserves the right to make such changes as required. Unless otherwise stated, all specifications are nominal.

Pasternack Enterprises, Inc. • P.O. Box 16759, Irvine, CA 92623
Phone: (866) 727-8376 or (949) 261-1920 • **Fax:** (949) 261-7451
Sales@Pasternack.com • Techsupport@Pasternack.com

© 2014 Pasternack Enterprises All Rights Reserved

N Male Connector Crimp/Solder Attachment For RG223, RG142, RG400, RG55

Plotted and Other Data

Notes: Values at 25 °C, sea level

N Male Connector Crimp/Solder Attachment For RG223, RG142, RG400, RG55 from Pasternack Enterprises has same day shipment for domestic and International orders. Our RF, microwave and fiber optic products maintain a 99% availability and are part of the broadest selection in the industry.

Click the following link (or enter part number in "SEARCH" on website) to obtain additional part information including price, inventory and certifications: N Male Connector Crimp/Solder Attachment For RG223, RG142, RG400, RG55 PE44788

URL: http://www.pasternack.com/n-male-standard-rg223-rg142-rg400-rg55-connector-pe44788-p.aspx

The information contained in this document is accurate to the best of our knowledge and representative of the part described herein. It may be necessary to make modifications to the part and/or the documentation of the part, in order to implement improvements. Pasternack reserves the right to make such changes as required. Unless otherwise stated, all specifications are nominal.

Pasternack Enterprises, Inc. • P.O. Box 16759, Irvine, CA 92623
Phone: (866) 727-8376 or (949) 261-1920 • **Fax:** (949) 261-7451
Sales@Pasternack.com • Techsupport@Pasternack.com

© 2014 Pasternack Enterprises All Rights Reserved

PE44788 CAD Drawing

N Male Connector Crimp/Solder Attachment For RG223, RG142, RG400, RG55

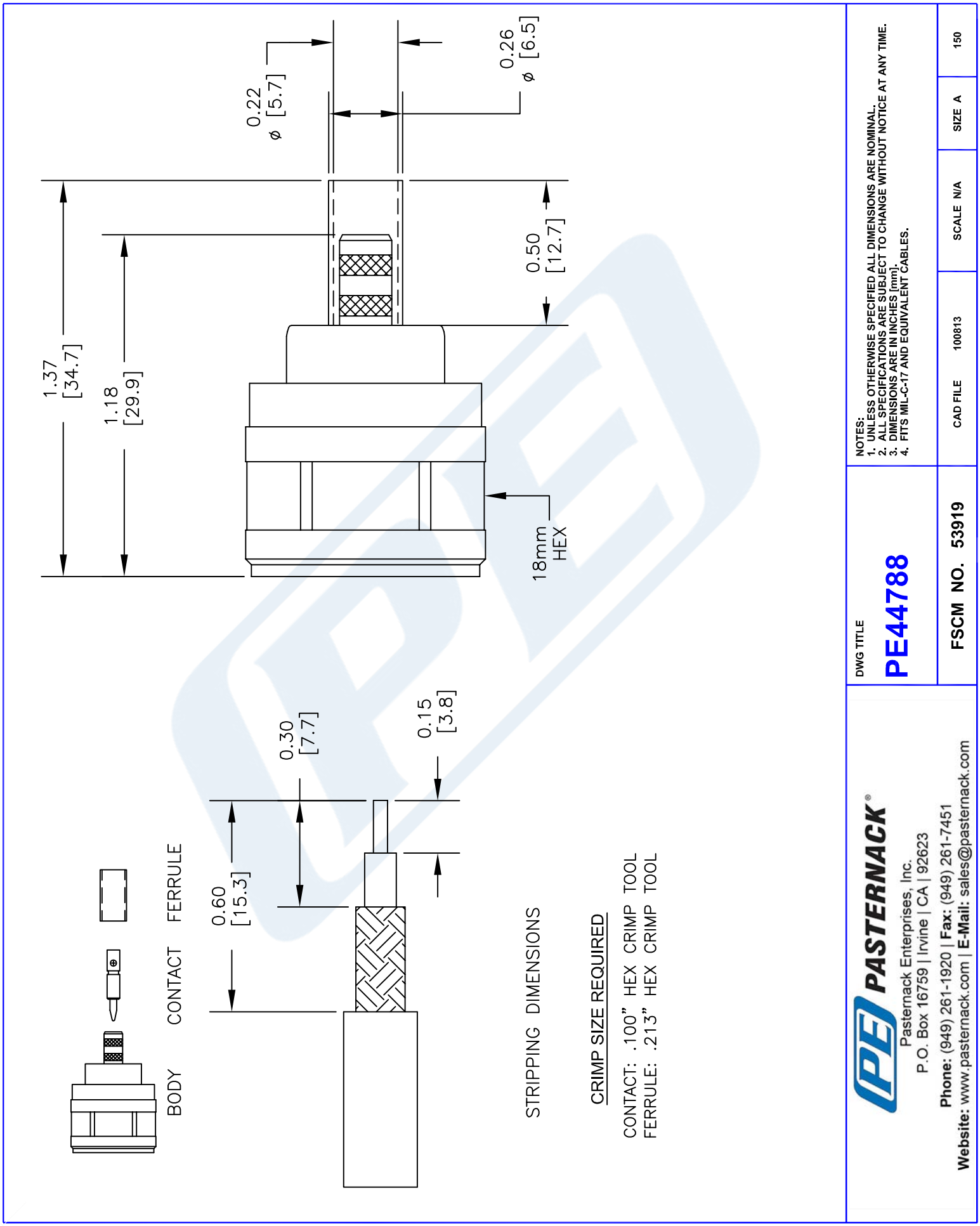

© 2014 Pasternack Enterprises All Rights Reserved

PASTERNACK®
www.pasternack.com

Flexible RG400 Coax Cable Double Shielded with Tan FEP Jacket

TECHNICAL DATA SHEET RG400/U

Flexible RG400 Coax Cable Double Shielded with Tan FEP Jacket

Configuration

Inner Conductor Material and Plating	Copper, Silver
Dielectric Type	PTFE
Shield Materials	Silver Plated Copper Braid, Silver Plated Copper Braid
Jacket Material and Color	FEP, Tan

Electrical Specifications

Impedance, Ohms	50
Velocity of Propagation, %	69.5
Maximum Operating Frequency, GHz	12.4
Capacitance, pF/ft [pF/m]	32 [104.99]
Maximum Operating Voltage, Volts	1,900

Electrical Specifications by Frequency

Frequency 1

Frequency, MHz	100
Attenuation, dB/100ft [dB/100m]	4.4 [14.44]

Frequency 2

Frequency, MHz	1000
Attenuation, dB/100ft [dB/100m]	14.7 [48.23]

Frequency 3

Frequency, GHz	5
Attenuation, dB/100ft [dB/100m]	36 [118.11]

Frequency 4

Frequency, GHz	11
Attenuation, dB/100ft [dB/100m]	57.9 [189.96]

Mechanical Specifications

Temperature

Operating Range, deg C	-55 to +200

Inner Conductor

Number of Strands	19
Material	Copper
Plating	Silver
Diameter, in [mm]	0.039 [0.99]

Click the following link (or enter part number in “SEARCH” on website) to obtain additional part information including price, inventory and certifications: Flexible RG400 Coax Cable Double Shielded with Tan FEP Jacket RG400/U

The information contained in this document is accurate to the best of our knowledge and representative of the part described herein. It may be necessary to make modifications to the part and/or the documentation of the part, in order to implement improvements. Pasternack reserves the right to make such changes as required. Unless otherwise stated, all specifications are nominal.

Pasternack Enterprises, Inc. • P.O. Box 16759, Irvine, CA 92623
Phone: (866) 727-8376 or (949) 261-1920 • **Fax:** (949) 261-7451
Sales@Pasternack.com • Techsupport@Pasternack.com

© 2013 Pasternack Enterprises All Rights Reserved

Flexible RG400 Coax Cable Double Shielded with Tan FEP Jacket

TECHNICAL DATA SHEET RG400/U

Dielectric:	
Type	PTFE
Diameter, in [mm]	0.116 [2.95]
Shield:	
Number of	2
Material 1	Silver Plated Copper Braid
Material 2	Silver Plated Copper Braid
Diameter, in [mm]	0.156 [3.96]
Jacket:	
Material	FEP
Diameter, in [mm]	0.195 [4.95]
Color	Tan
One Time Minimum Bend Radius, in [mm]	1 [25.4]
Weight, lbs/ft [Kg/m]	0.046 [0.07]

Compliance Certifications (visit www.Pasternack.com for current document)

RoHS Compliant	Yes

Plotted and Other Data

Notes:	Values at 25 °C, sea level

Flexible RG400 Coax Cable Double Shielded with Tan FEP Jacket from Pasternack Enterprises has same day shipment for domestic and International orders. Our RF, microwave and fiber optic products maintain a 99% availability and are part of the broadest selection in the industry.

Click the following link (or enter part number in “SEARCH” on website) to obtain additional part information including price, inventory and certifications: Flexible RG400 Coax Cable Double Shielded with Tan FEP Jacket RG400/U

URL: http://www.pasternack.com/flexible-0.195-rg400-stranded-center-conductor-50-ohm-coax-cable-fep-jacket-rg400-u-p.aspx

The information contained in this document is accurate to the best of our knowledge and representative of the part described herein. It may be necessary to make modifications to the part and/or the documentation of the part, in order to implement improvements. Pasternack reserves the right to make such changes as required. Unless otherwise stated, all specifications are nominal.

Pasternack Enterprises, Inc. • P.O. Box 16759, Irvine, CA 92623
Phone: (866) 727-8376 or (949) 261-1920 • **Fax:** (949) 261-7451
Sales@Pasternack.com • Techsupport@Pasternack.com

© 2013 Pasternack Enterprises All Rights Reserved

RG400/U CAD Drawing

Flexible RG400 Coax Cable Double Shielded with Tan FEP Jacket

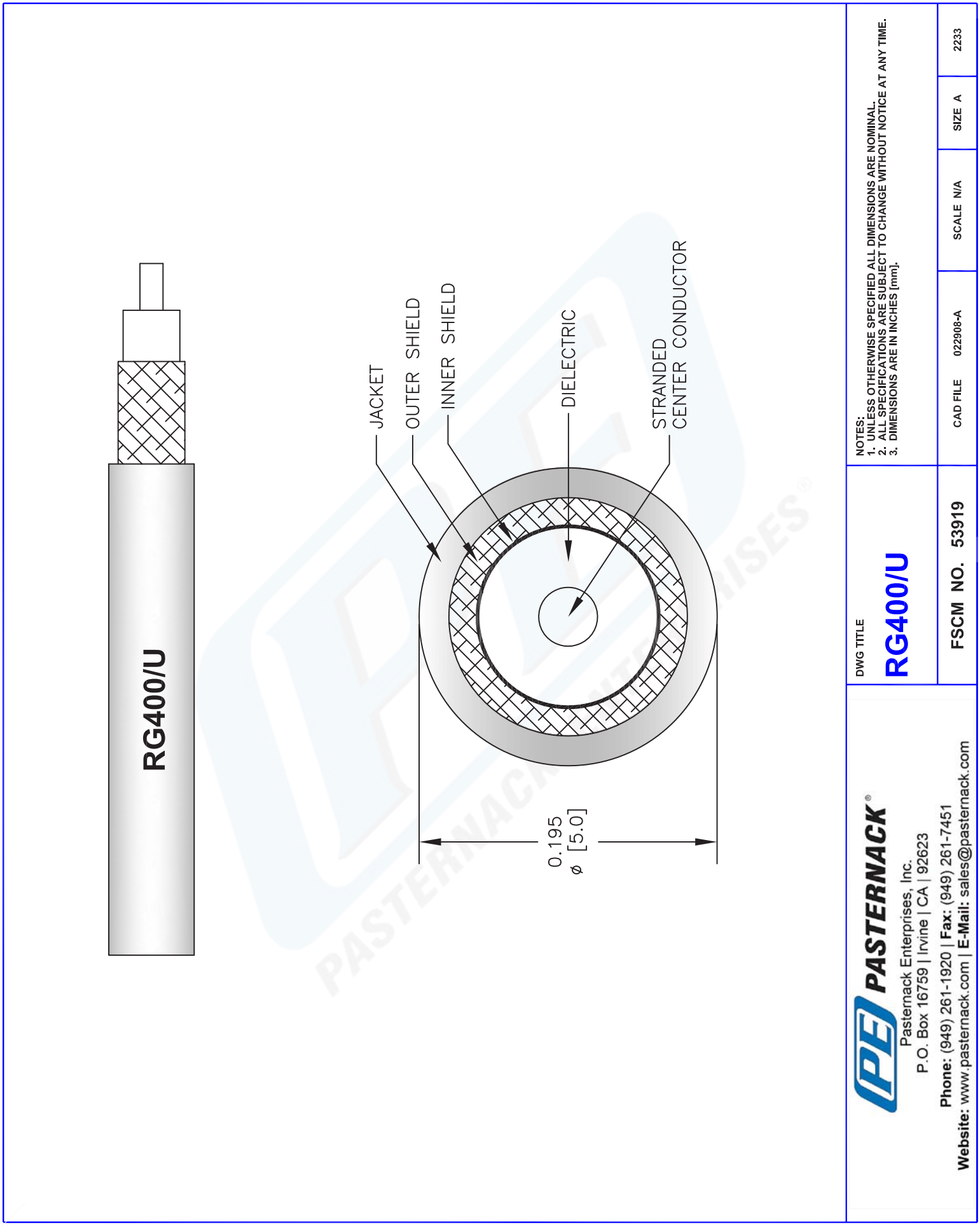

© 2013 Pasternack Enterprises All Rights Reserved