PASTERNACK®
THE ENGINEER'S RF SOURCE

# SMA Female Connector Solder Attachment 2 Hole Flange Mount for PE-047SR, PE-SR047AL, PE-SR047FL, .481 inch Hole Spacing

RF Connectors Technical Data Sheet PE4547

## Configuration

- SMA Female Connector
- MIL-STD-348
- 50 Ohms
- Straight Body Geometry
- PE-047SR, PE-SR047AL, PE-SR047FL Interface Type
- Solder/Solder Attachment
- 2 Hole Flange

## Features

- Max. Operating Frequency 18 GHz
- Good VSWR of 1.5:1
- Gold over Nickel Plated Beryllium Copper Contact
- Contact plating according to MIL-G-45204

## Applications

- General Purpose Test
- Rack and Panel Mount Applications
- Custom Cable Assemblies

### Description

Pasternack's PE4547 SMA female 2 hole flange mount connector with solder/solder attachment for PE-047SR, PE-SR047AL and PE-SR047FL (.481 inch hole spacing) is part of our full line of RF components available for same-day shipping. Our SMA female connector operates up to a maximum frequency of 18 GHz and offers good VSWR of 1.5:1. This SMA 2 hole flange connector allows designers to create external connections on their product enclosures, and can be used in a variety of other rack mount and panel mount applications.

Our SMA female 2 hole flange connector PE4547 datasheet specifications and drawing with dimensions are shown below in this PDF. Pasternack's broad catalog of RF, microwave and millimeter wave connectors allows designers to configure and customize their signal connections however they like. Whether the need is to provide an I/O for a board design, or simply create a custom cable assembly configuration, Pasternack has the right connector for the job. Pasternack can also expertly build your custom cable assemblies for you and ship same-day.

### Electrical Specifications

| Description | Minimum | Typical | Maximum | Units |
|---|---|---|---|---|
| Frequency Range | DC | | 18 | GHz |
| VSWR | | | 1.5:1 | |
| Operating Voltage (AC) | | | 335 | Vrms |
| Dielectric Withstanding Voltage (AC) | | | 1,000 | Vrms |
| Insulation Resistance | 5,000 | | | MOhms |

### Mechanical Specifications

**Size**

| | |
|---|---|
| Length | 0.439 in [11.15 mm] |
| Width/Dia. | 0.223 in [5.66 mm] |
| Height | 0.63 in [16 mm] |

Click the following link (or enter part number in "SEARCH" on website) to obtain additional part information including price, inventory and certifications: SMA Female Connector Solder Attachment 2 Hole Flange Mount for PE-047SR, PE-SR047AL, PE-SR047FL, .481 inch Hole Spacing PE4547

Pasternack Enterprises, Inc. • P.O. Box 16759, Irvine, CA 92623
**Phone:** (866) 727-8376 or (949) 261-1920 • **Fax:** (949) 261-7451
Sales@Pasternack.com • Techsupport@Pasternack.com

© 2016 Pasternack Enterprises All Rights Reserved

# SMA Female Connector Solder Attachment 2 Hole Flange Mount for PE-047SR, PE-SR047AL, PE-SR047FL, .481 inch Hole Spacing



| | |
|---|---|
| Weight | 0.005 lbs [2.27 g] |

**Material Specifications**

| Description | Material | Plating |
|---|---|---|
| Contact | Beryllium Copper | Gold over Nickel MIL-G-45204 |
| Insulation | PTFE | |
| Outer Conductor | Stainless Steel | Gold MIL-G-45204 |
| Body | Stainless Steel | Gold over Nickel MIL-G-45204 |

## Environmental Specifications

**Temperature**

| | |
|---|---|
| Operating Range | -65 to +165 deg C |

## Compliance Certifications (see product page for current document)

## Plotted and Other Data

Notes:

SMA Female Connector Solder Attachment 2 Hole Flange Mount for PE-047SR, PE-SR047AL, PE-SR047FL, .481 inch Hole Spacing from Pasternack Enterprises has same day shipment for domestic and International orders. Our RF, microwave and millimeter wave products maintain a 99% availability and are part of the broadest selection in the industry.

Click the following link (or enter part number in "SEARCH" on website) to obtain additional part information including price, inventory and certifications: SMA Female Connector Solder Attachment 2 Hole Flange Mount for PE-047SR, PE-SR047AL, PE-SR047FL, .481 inch Hole Spacing PE4547

URL: https://www.pasternack.com/sma-female-standard-pe-047sr-pe-sr047al-pe-sr047fl-connector-pe4547-p.aspx

The information contained in this document is accurate to the best of our knowledge and representative of the part described herein. It may be necessary to make modifications to the part and/or the documentation of the part, in order to implement improvements. Pasternack reserves the right to make such changes as required. Unless otherwise stated, all specifications are nominal. Pasternack does not make any representation or warranty regarding the suitability of the part described herein for any particular purpose, and Pasternack does not assume any liability arising out of the use of any part or documentation.

Pasternack Enterprises, Inc. • P.O. Box 16759, Irvine, CA 92623
**Phone:** (866) 727-8376 or (949) 261-1920 • **Fax:** (949) 261-7451
Sales@Pasternack.com • Techsupport@Pasternack.com

© 2016 Pasternack Enterprises All Rights Reserved

# PE4547 CAD Drawing

SMA Female Connector Solder Attachment 2 Hole Flange Mount for PE-047SR, PE-SR047AL, PE-SR047FL, .481 inch Hole Spacing

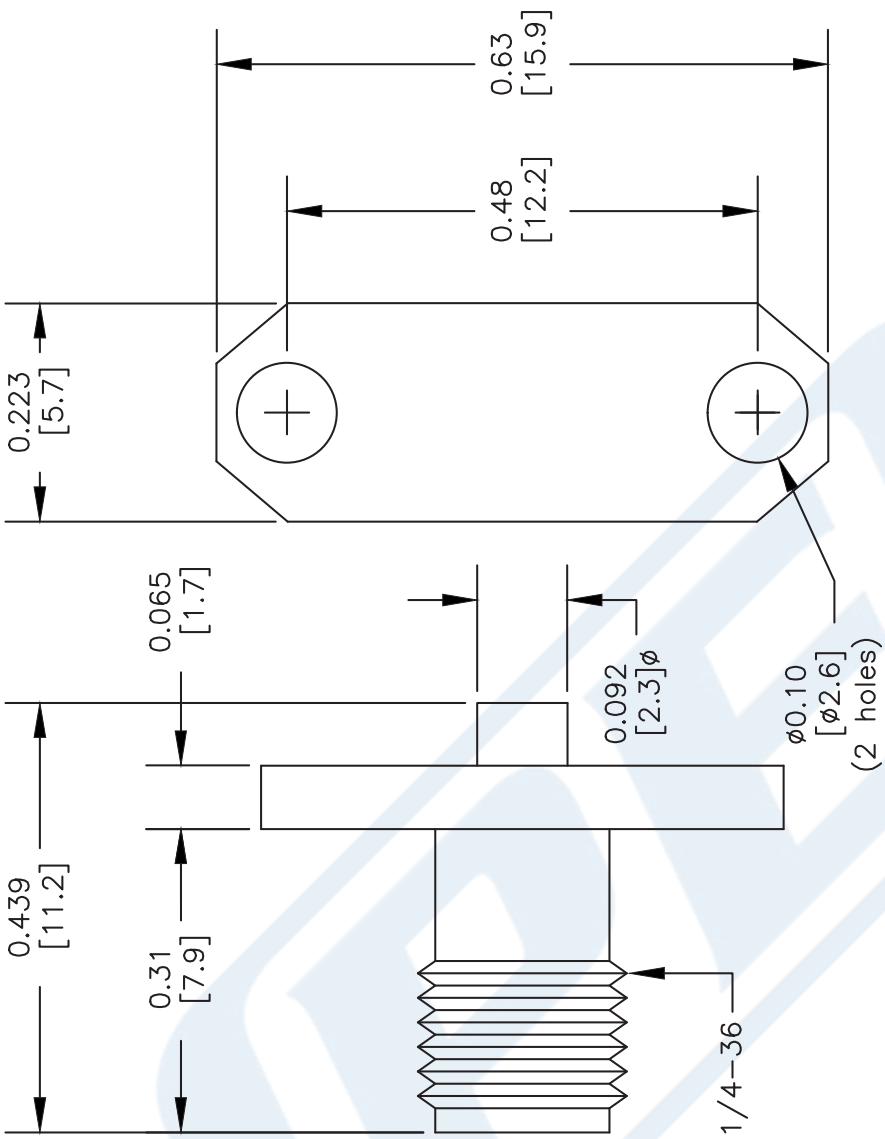


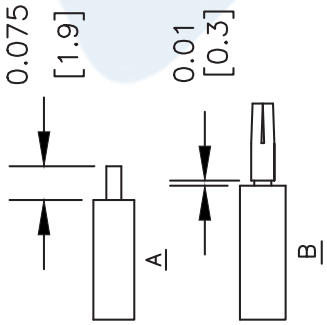


STRIPPING DIMENSIONS

ASSEMBLY PROCEDURES

STRIP CABLE AS SHOWN. DO NOT NICK CENTER CONDUCTOR. SLIDE CABLE THROUGH THE CONNECTOR.

SHIM CONTACT AS SHOWN IN (B) & SOLDER CONTACT TO CENTER CONDUCTOR.

PULL DOWN ON CABLE TILL CONTACT IS FLUSH WITH DIELECTRIC. SOLDER OUTER CONDUCTOR TO BODY.

NOTES:
1. UNLESS OTHERWISE SPECIFIED ALL DIMENSIONS ARE NOMINAL.
2. ALL SPECIFICATIONS ARE SUBJECT TO CHANGE WITHOUT NOTICE AT ANY TIME.
3. DIMENSIONS ARE IN INCHES [mm].
4. FITS MIL-C-17 AND EQUIVALENT CABLES.

| | | | |
|---|---|---|---|
| DWG TITLE PE4547 | CAD FILE 051402 | SCALE N/A | SIZE A | XXXX |
| FSCM NO. 53919 | | | |

PASTERNACK®
Pasternack Enterprises, Inc.
P.O. Box 16759 | Irvine | CA | 92623
**Phone:** (949) 261-1920 | **Fax:** (949) 261-7451
**Website:** www.pasternack.com | **E-Mail:** sales@pasternack.com

© 2016 Pasternack Enterprises All Rights Reserved

# MMCX Plug Right Angle Connector Solder Attachment for PE-047SR, PE-SR047AL, PE-SR047FL

## RF Connectors Technical Data Sheet PE44457

## Configuration

- MMCX Plug Connector
- 50 Ohms
- Right Angle Body Geometry
- PE-047SR, PE-SR047AL, PE-SR047FL Interface Type
- Solder Attachment

## Features

- Max. Operating Frequency 6 GHz
- Gold Plated Brass Contact

## Applications

- General Purpose Test
- Custom Cable Assemblies

### Description

Pasternack's PE44457 MMCX plug right angle connector with solder attachment for PE-047SR, PE-SR047AL and PE-SR047FL is part of our full line of RF components available for same-day shipping. Our MMCX plug connector operates up to a maximum frequency of 6 GHz. Its right angle body geometry allows for easier connections in tight spaces.

Our MMCX plug right angle connector PE44457 datasheet specifications and drawing with dimensions are shown below in this PDF. Pasternack's broad catalog of RF, microwave and millimeter wave connectors allows designers to configure and customize their signal connections however they like. Whether the need is to provide an I/O for a board design, or simply create a custom cable assembly configuration, Pasternack has the right connector for the job. Pasternack can also expertly build your custom cable assemblies for you and ship same-day.

### Electrical Specifications

| Description | Minimum | Typical | Maximum | Units |
|---|---|---|---|---|
| Frequency Range | DC | | 6 | GHz |

### Mechanical Specifications

**Size**

| | |
|---|---|
| Length | 0.333 in [8.46 mm] |
| Width/Dia. | 0.14 in [3.56 mm] |
| Height | 0.276 in [7.01 mm] |
| Weight | 0.006 lbs [2.72 g] |

Click the following link (or enter part number in "SEARCH" on website) to obtain additional part information including price, inventory and certifications: MMCX Plug Right Angle Connector Solder Attachment for PE-047SR, PE-SR047AL, PE-SR047FL PE44457

Pasternack Enterprises, Inc. • P.O. Box 16759, Irvine, CA 92623
**Phone:** (866) 727-8376 or (949) 261-1920 • **Fax:** (949) 261-7451
Sales@Pasternack.com • Techsupport@Pasternack.com

© 2016 Pasternack Enterprises All Rights Reserved

# MMCX Plug Right Angle Connector Solder Attachment for PE-047SR, PE-SR047AL, PE-SR047FL



**Material Specifications**

| Description | Material | Plating |
|---|---|---|
| Contact | Brass | Gold |
| Insulation | PTFE | |
| Body | Brass | Gold |

## Environmental Specifications

**Temperature**

Operating Range -65 to +165 deg C

## Compliance Certifications (see product page for current document)

## Plotted and Other Data

Notes:

MMCX Plug Right Angle Connector Solder Attachment for PE-047SR, PE-SR047AL, PE-SR047FL from Pasternack Enterprises has same day shipment for domestic and International orders. Our RF, microwave and millimeter wave products maintain a 99% availability and are part of the broadest selection in the industry.

Click the following link (or enter part number in "SEARCH" on website) to obtain additional part information including price, inventory and certifications: MMCX Plug Right Angle Connector Solder Attachment for PE-047SR, PE-SR047AL, PE-SR047FL PE44457

URL: https://www.pasternack.com/mmcx-plug-standard-pe-047sr-pe-sr047al-pe-sr047fl-connector-pe44457-p.aspx

The information contained in this document is accurate to the best of our knowledge and representative of the part described herein. It may be necessary to make modifications to the part and/or the documentation of the part, in order to implement improvements. Pasternack reserves the right to make such changes as required. Unless otherwise stated, all specifications are nominal. Pasternack does not make any representation or warranty regarding the suitability of the part described herein for any particular purpose, and Pasternack does not assume any liability arising out of the use of any part or documentation.

Pasternack Enterprises, Inc. • P.O. Box 16759, Irvine, CA 92623
**Phone:** (866) 727-8376 or (949) 261-1920 • **Fax:** (949) 261-7451
Sales@Pasternack.com • Techsupport@Pasternack.com

© 2016 Pasternack Enterprises All Rights Reserved

# PE44457 CAD Drawing

MMCX Plug Right Angle Connector Solder Attachment
for PE-047SR, PE-SR047AL, PE-SR047FL

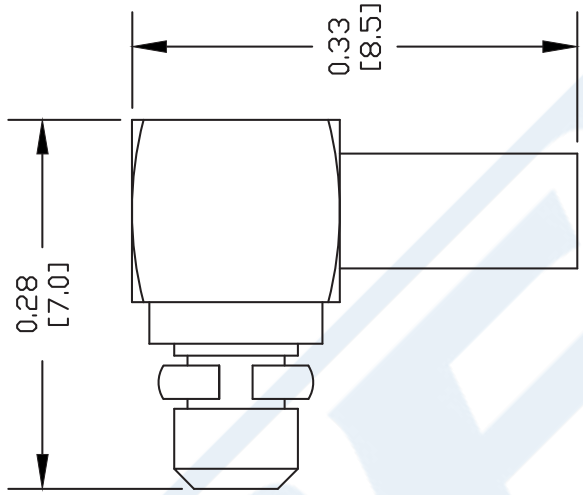


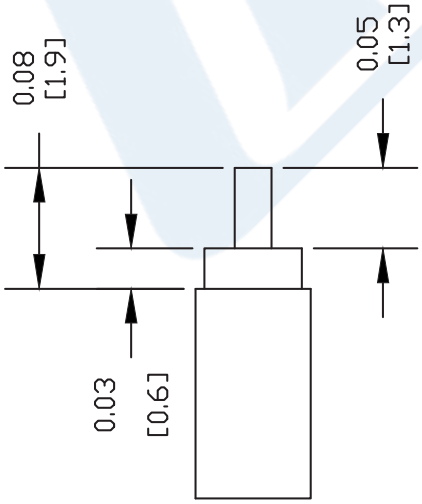


STRIPPING DIMENSIONS

ASSEMBLY PROCEDURES

1. STRIP CABLE AS SHOWN AND TIN CENTER CONDUCTOR.
2. INSTALL CABLE INTO BODY OF CONNECTOR UNTIL CENTER CONDUCTOR SETS IN PLACE. SOFT SOLDER CONTACT AND CENTER CONDUCTOR.
3. SOLDER OUTER CONDUCTOR TO BODY. INSERT INSULATION INTO CONNECTOR & PRESS CAP DOWN.

NOTES:
1. UNLESS OTHERWISE SPECIFIED ALL DIMENSIONS ARE NOMINAL.
2. ALL SPECIFICATIONS ARE SUBJECT TO CHANGE WITHOUT NOTICE AT ANY TIME.
3. DIMENSIONS ARE IN INCHES [mm].
4. FITS MIL-C-17 AND EQUIVALENT CABLES.

DWG TITLE
PE44457

REV. -

FSCM NO. 53919

CAD FILE 072506

SCALE N/A

SIZE A

127

PASTERNACK®
Pasternack Enterprises, Inc.
P.O. Box 16759 | Irvine | CA | 92623
**Phone:** (949) 261-1920 | **Fax:** (949) 261-7451
**Website:** www.pasternack.com | **E-Mail:** sales@pasternack.com

© 2016 Pasternack Enterprises All Rights Reserved

# 047 Semi-rigid Coax Cable with Copper Outer Conductor

## TECHNICAL DATA SHEET PE-047SR

### Configuration

| | |
|---|---|
| Inner Conductor Material and Plating | Copper Clad Steel, Silver |
| Dielectric Type | PTFE |
| Shield Materials | Copper |

### Electrical Specifications

| | |
|---|---|
| Impedance, Ohms | 50 |
| Maximum Operating Frequency, GHz | 40 |
| Dielectric Withstanding Voltage, Vrms | 2,000 |

**Electrical Specifications by Frequency**

**Frequency 1**

| | |
|---|---|
| Frequency, MHz | 1000 |
| Attenuation, dB/100ft [dB/100m] | 40 [131.23] |
| Power Handling, Watts | 32 |

**Frequency 2**

| | |
|---|---|
| Frequency, GHz | 10 |
| Attenuation, dB/100ft [dB/100m] | 130 [426.51] |
| Power Handling, Watts | 9 |

**Frequency 3**

| | |
|---|---|
| Frequency, GHz | 20 |
| Attenuation, dB/100ft [dB/100m] | 190 [623.36] |
| Power Handling, Watts | 6.5 |

### Mechanical Specifications

**Temperature**

| | |
|---|---|
| Operating Range, deg C | -55 to +100 |

**Inner Conductor**

| | |
|---|---|
| Number of Strands | 1 |
| Material | Copper Clad Steel |
| Plating | Silver |
| Diameter, in [mm] | 0.011 [0.28] |

**Dielectric:**

| | |
|---|---|
| Type | PTFE |
| Diameter, in [mm] | 0.037 [0.94] |

**Shield:**

| | |
|---|---|
| Number of | 1 |
| Material 1 | Copper |
| Diameter, in [mm] | 0.047 [1.19] |

Click the following link (or enter part number in “SEARCH” on website) to obtain additional part information including price, inventory and certifications: 047 Semi-rigid Coax Cable with Copper Outer Conductor PE-047SR

Pasternack Enterprises, Inc. • P.O. Box 16759, Irvine, CA 92623
**Phone:** (866) 727-8376 or (949) 261-1920 • **Fax:** (949) 261-7451
Sales@Pasternack.com • Techsupport@Pasternack.com

© 2014 Pasternack Enterprises All Rights Reserved

# 047 Semi-rigid Coax Cable with Copper Outer Conductor



**Jacket:**

| | |
|---|---|
| Diameter, in [mm] | 0.047 [1.19] |
| One Time Minimum Bend Radius, in [mm] | 0.05 [1.27] |
| Weight, lbs/ft [Kg/m] | 0.005 [0.01] |

**Compliance Certifications** (visit www.Pasternack.com for current document)

| | |
|---|---|
| RoHS Compliant | |
| REACH Compliant | 12/19/2011 |

**Plotted and Other Data**

Notes:

- Values at +25 °C, sea level

047 Semi-rigid Coax Cable with Copper Outer Conductor from Pasternack Enterprises has same day shipment for domestic and International orders. Our RF, microwave and millimeter wave products maintain a 99% availability and are part of the broadest selection in the industry.

Click the following link (or enter part number in "SEARCH" on website) to obtain additional part information including price, inventory and certifications: 047 Semi-rigid Coax Cable with Copper Outer Conductor PE-047SR

URL: http://www.pasternack.com/semirigid-0.047-50-ohm-coax-cable-copper-pe-047sr-p.aspx

The information contained in this document is accurate to the best of our knowledge and representative of the part described herein. It may be necessary to make modifications to the part and/or the documentation of the part, in order to implement improvements. Pasternack reserves the right to make such changes as required. Unless otherwise stated, all specifications are nominal. Pasternack does not make any representation or warranty regarding the suitability of the part described herein for any particular purpose, and Pasternack does not assume any liability arising out of the use of any part or documentation.

Pasternack Enterprises, Inc. • P.O. Box 16759, Irvine, CA 92623
**Phone:** (866) 727-8376 or (949) 261-1920 • **Fax:** (949) 261-7451
Sales@Pasternack.com • Techsupport@Pasternack.com

© 2014 Pasternack Enterprises All Rights Reserved

# PE-047SR CAD Drawing

047 Semi-rigid Coax Cable with Copper Outer Conductor

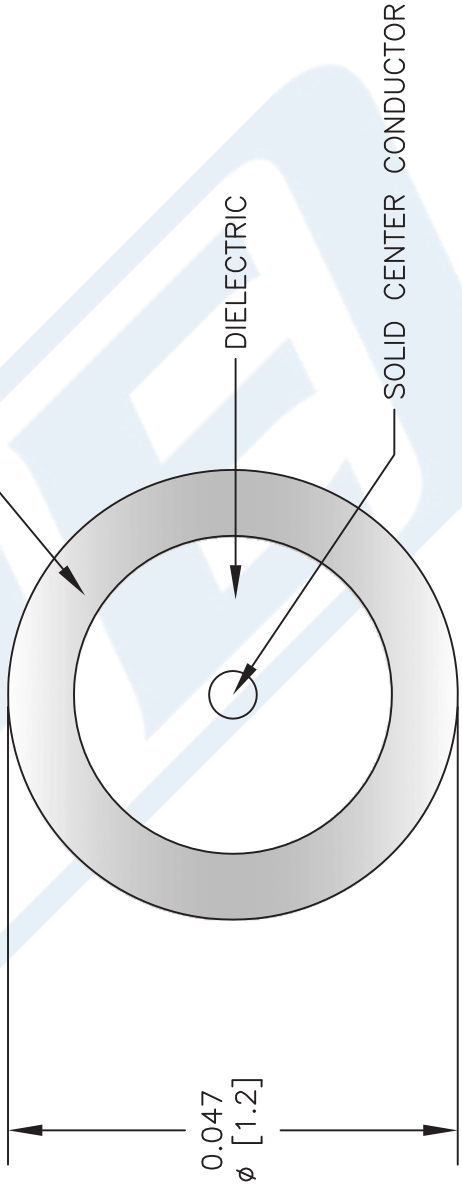


NOTES:
1. UNLESS OTHERWISE SPECIFIED ALL DIMENSIONS ARE NOMINAL.
2. ALL SPECIFICATIONS ARE SUBJECT TO CHANGE WITHOUT NOTICE AT ANY TIME.
3. DIMENSIONS ARE IN INCHES [mm].

DWG TITLE
PE-047SR

FSCM NO. 53919

CAD FILE 073113 | SCALE N/A | SIZE A | 2233

PASTERNACK®
Pasternack Enterprises, Inc.
P.O. Box 16759 | Irvine | CA | 92623
**Phone:** (949) 261-1920 | **Fax:** (949) 261-7451
**Website:** www.pasternack.com | **E-Mail:** sales@pasternack.com

© 2014 Pasternack Enterprises All Rights Reserved