PASTERNACK®
THE ENGINEER'S RF SOURCE

SC Male Connector Crimp/Solder Attachment for RG214, RG9, RG225, RG393

Configuration

- SC Male Connector
- MIL-STD-348A
- 50 Ohms
- Straight Body Geometry
- RG214, RG9, RG225, RG393 Interface Type
- Crimp/Solder Attachment

Features

- Max. Operating Frequency 6 GHz
- Good VSWR of 1.3:1
- Silver Plated Brass Contact
- 200 µin minimum contact plating

Applications

- General Purpose Test
- Custom Cable Assemblies

Description

Pasternack's PE4232 SC male connector with crimp/solder attachment for RG214, RG9, RG225 and RG393 is part of our full line of RF components available for same-day shipping. Our SC male connector operates up to a maximum frequency of 6 GHz and offers good VSWR of 1.3:1.

Our SC male connector PE4232 datasheet specifications and drawing with dimensions are shown below in this PDF. Pasternack's broad catalog of RF, microwave and millimeter wave connectors allows designers to configure and customize their signal connections however they like. Whether the need is to provide an I/O for a board design, or simply create a custom cable assembly configuration, Pasternack has the right connector for the job. Pasternack can also expertly build your custom cable assemblies for you and ship same-day.

Electrical Specifications

Description	Minimum	Typical	Maximum	Units
Frequency Range	DC		6	GHz
VSWR			1.3:1	
Operating Voltage (AC)			1,000	Vrms

Mechanical Specifications

Size

Length	1.72 in [43.69 mm]
Width/Dia.	0.787 in [19.99 mm]
Weight	0.078 lbs [35.38 g]

Click the following link (or enter part number in "SEARCH" on website) to obtain additional part information including price, inventory and certifications: SC Male Connector Crimp/Solder Attachment for RG214, RG9, RG225, RG393 PE4232

Pasternack Enterprises, Inc. • P.O. Box 16759, Irvine, CA 92623
Phone: (866) 727-8376 or (949) 261-1920 • **Fax:** (949) 261-7451
Sales@Pasternack.com • Techsupport@Pasternack.com

© 2016 Pasternack Enterprises All Rights Reserved

SC Male Connector Crimp/Solder Attachment for RG214, RG9, RG225, RG393

Material Specifications

Description	Material	Plating
Contact	Brass	Silver 200 µin minimum
Insulation	PTFE	
Body	Brass	Nickel 100 µin minimum
Coupling Nut	Brass	Nickel 100 µin minimum

Environmental Specifications

Temperature

Operating Range -65 to +165 deg C

Compliance Certifications (see product page for current document)

Plotted and Other Data

Notes:

SC Male Connector Crimp/Solder Attachment for RG214, RG9, RG225, RG393 from Pasternack Enterprises has same day shipment for domestic and International orders. Our RF, microwave and millimeter wave products maintain a 99% availability and are part of the broadest selection in the industry.

Click the following link (or enter part number in "SEARCH" on website) to obtain additional part information including price, inventory and certifications: SC Male Connector Crimp/Solder Attachment for RG214, RG9, RG225, RG393 PE4232

URL: https://www.pasternack.com/sc-male-standard-rg214-rg9-rg225-rg393-connector-pe4232-p.aspx

The information contained in this document is accurate to the best of our knowledge and representative of the part described herein. It may be necessary to make modifications to the part and/or the documentation of the part, in order to implement improvements. Pasternack reserves the right to make such changes as required. Unless otherwise stated, all specifications are nominal. Pasternack does not make any representation or warranty regarding the suitability of the part described herein for any particular purpose, and Pasternack does not assume any liability arising out of the use of any part or documentation.

Pasternack Enterprises, Inc. • P.O. Box 16759, Irvine, CA 92623
Phone: (866) 727-8376 or (949) 261-1920 • **Fax:** (949) 261-7451
Sales@Pasternack.com • Techsupport@Pasternack.com

© 2016 Pasternack Enterprises All Rights Reserved

PE4232 CAD Drawing

SC Male Connector Crimp/Solder Attachment for RG214, RG9, RG225, RG393

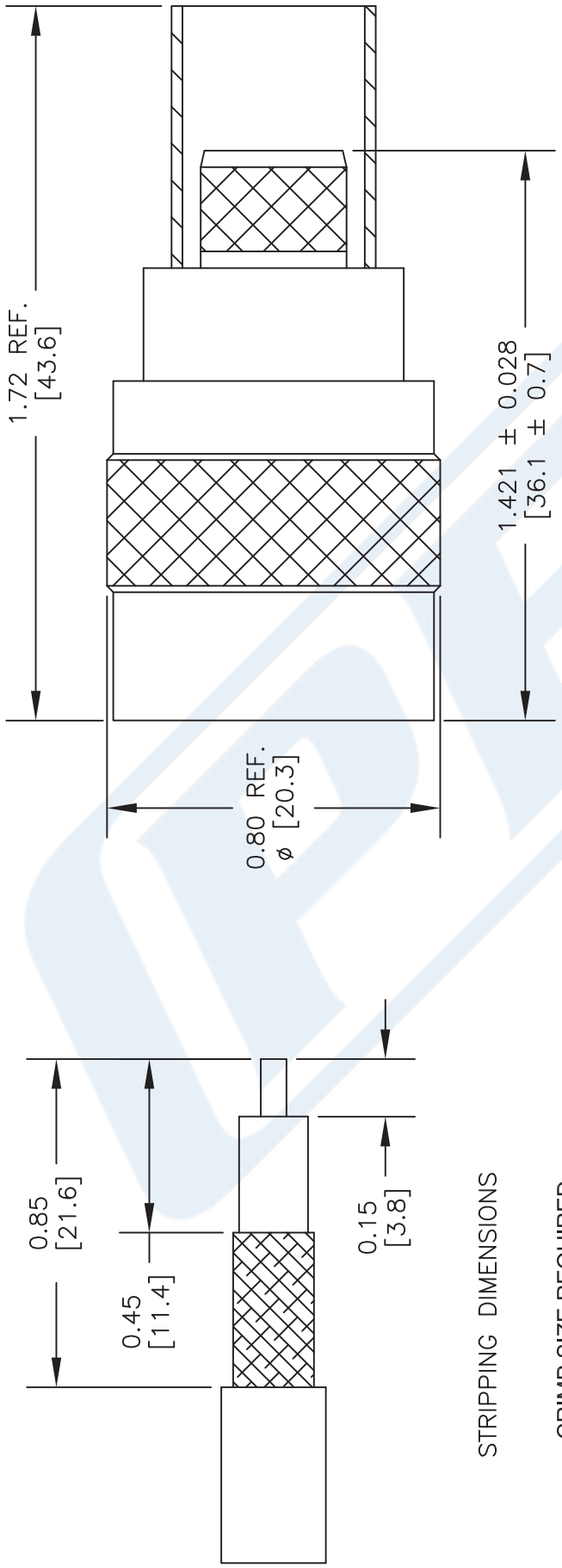

STRIPPING DIMENSIONS

CRIMP SIZE REQUIRED

CONTACT: SOLDER
FERRULE: .429" HEX CRIMP TOOL

NOTES:
1. UNLESS OTHERWISE SPECIFIED ALL DIMENSIONS ARE NOMINAL.
2. ALL SPECIFICATIONS ARE SUBJECT TO CHANGE WITHOUT NOTICE AT ANY TIME.
3. DIMENSIONS ARE IN INCHES [mm].
4. FITS MIL-C-17 AND EQUIVALENT CABLES.

DWG TITLE
PE4232

REV. C	FSCM NO. 53919	CAD FILE 082712	SCALE N/A	SIZE A	2233

PASTERNACK®
Pasternack Enterprises, Inc.
P.O. Box 16759 | Irvine | CA | 92623
Phone: (949) 261-1920 | **Fax:** (949) 261-7451
Website: www.pasternack.com | **E-Mail:** sales@pasternack.com

© 2016 Pasternack Enterprises All Rights Reserved

N Female Connector Clamp/Solder (Captive Contact) Attachment for RG213, RG214, RG8, RG9, RG11, RG225, RG393, RG144, RG216, RG215

RF Connectors Technical Data Sheet PE4059

Configuration

- N Female Connector
- MIL-STD-348
- 50 Ohms
- Straight Body Geometry
- RG213, RG214, RG8, RG9, RG11, RG225, RG393, RG144, RG216, RG215 Interface Type
- Clamp/Solder (Captive Contact) Attachment

Features

- Silver Plated Contact
- Contact plating according to QQ-S-365

Applications

- General Purpose Test
- Custom Cable Assemblies

Description

Pasternack's PE4059 type N female connector with clamp/solder (captive contact) attachment for RG213, RG214, RG8, RG9, RG11, RG225, RG393, RG144, RG216 and RG215 is part of our full line of RF components available for same-day shipping.

Our type N female connector PE4059 datasheet specifications and drawing with dimensions are shown below in this PDF. Pasternack's broad catalog of RF, microwave and millimeter wave connectors allows designers to configure and customize their signal connections however they like. Whether the need is to provide an I/O for a board design, or simply create a custom cable assembly configuration, Pasternack has the right connector for the job. Pasternack can also expertly build your custom cable assemblies for you and ship same-day.

Mechanical Specifications

Size

Length	1.56 in [39.62 mm]
Width/Dia.	0.75 in [19.05 mm]
Weight	0.108 lbs [48.99 g]

Material Specifications

Description	Material	Plating
Contact		Silver QQ-S-365
Insulation	PTFE	
Body	Brass	Nickel QQ-N-290

Click the following link (or enter part number in "SEARCH" on website) to obtain additional part information including price, inventory and certifications: N Female Connector Clamp/Solder (Captive Contact) Attachment for RG213, RG214, RG8, RG9, RG11, RG225, RG393, RG144, RG216, RG215 PE4059

Pasternack Enterprises, Inc. • P.O. Box 16759, Irvine, CA 92623
Phone: (866) 727-8376 or (949) 261-1920 • **Fax:** (949) 261-7451
Sales@Pasternack.com • Techsupport@Pasternack.com

© 2018 Pasternack Enterprises All Rights Reserved

N Female Connector Clamp/Solder (Captive Contact) Attachment for RG213, RG214, RG8, RG9, RG11, RG225, RG393, RG144, RG216, RG215

Environmental Specifications

Compliance Certifications (see product page for current document)

Plotted and Other Data

Notes:

Click the following link (or enter part number in "SEARCH" on website) to obtain additional part information including price, inventory and certifications: N Female Connector Clamp/Solder (Captive Contact) Attachment for RG213, RG214, RG8, RG9, RG11, RG225, RG393, RG144, RG216, RG215 PE4059

Pasternack Enterprises, Inc. • P.O. Box 16759, Irvine, CA 92623
Phone: (866) 727-8376 or (949) 261-1920 • **Fax:** (949) 261-7451
Sales@Pasternack.com • Techsupport@Pasternack.com

© 2018 Pasternack Enterprises All Rights Reserved

N Female Connector Clamp/Solder (Captive Contact) Attachment for RG213, RG214, RG8, RG9, RG11, RG225, RG393, RG144, RG216, RG215

Assembly Instruction

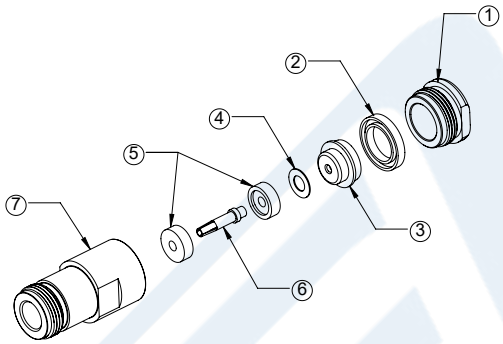

1. SLIDE CLAMP NUT (1), GASKET (2) AND WASHER (3) OVER CABLE. STRIP CABLE AS SHOWN. DO NOT NICK BRAID WHILE CUTTING JACKET. TAPER END OF BRAID TO PERMIT ASSEMBLY OF CLAMP.

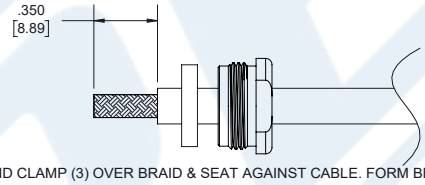

2. SLIDE BRAID CLAMP (3) OVER BRAID & SEAT AGAINST CABLE. FORM BRAID OVER CLAMP NUT. TRIM BRAID BACK TO SHOULDER. CUT DIELECTRIC & CENTER CONDUCTOR TO DIMENSION SHOWN. DO NOT NICK CENTER CONDUCTOR

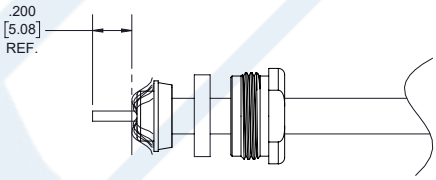

3. SLIDE WASHER (4) AND HALF- INSULATOR (5) AGAINST THE BRAID CLAMP AND HOLD BRAID IN PLACE. SOLDER CONTACT (6) TO CENTER CONDUCTOR. REMOVE EXCESS SOLDER. DO NOT OVER HEAT DIELECTRIC.SLIDE A REST HALF- INSULATOR (5) TO LOCKED CONTACT. INSERT CABLE ASSEMBLY INTO BODY (7) & TIGHTEN.

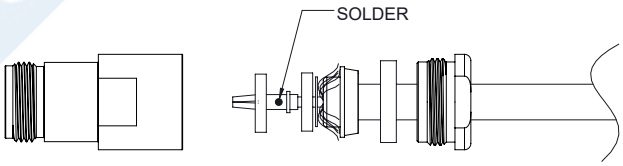

Click the following link (or enter part number in "SEARCH" on website) to obtain additional part information including price, inventory and certifications: N Female Connector Clamp/Solder (Captive Contact) Attachment for RG213, RG214, RG8, RG9, RG11, RG225, RG393, RG144, RG216, RG215 PE4059

Pasternack Enterprises, Inc. • P.O. Box 16759, Irvine, CA 92623
Phone: (866) 727-8376 or (949) 261-1920 • **Fax:** (949) 261-7451
Sales@Pasternack.com • Techsupport@Pasternack.com

© 2018 Pasternack Enterprises All Rights Reserved

N Female Connector Clamp/Solder (Captive Contact) Attachment for RG213, RG214, RG8, RG9, RG11, RG225, RG393, RG144, RG216, RG215

RF Connectors Technical Data Sheet PE4059

N Female Connector Clamp/Solder (Captive Contact) Attachment for RG213, RG214, RG8, RG9, RG11, RG225, RG393, RG144, RG216, RG215 from Pasternack Enterprises has same day shipment for domestic and International orders. Our RF, microwave and millimeter wave products maintain a 99.4% availability and are part of the broadest selection in the industry.

Click the following link (or enter part number in “SEARCH” on website) to obtain additional part information including price, inventory and certifications: N Female Connector Clamp/Solder (Captive Contact) Attachment for RG213, RG214, RG8, RG9, RG11, RG225, RG393, RG144, RG216, RG215 PE4059

URL: https://www.pasternack.com/n-female-standard-rg213-rg214-rg8-rg9-rg11-rg225-rg393-connector-pe4059-p.aspx

The information contained in this document is accurate to the best of our knowledge and representative of the part described herein. It may be necessary to make modifications to the part and/or the documentation of the part, in order to implement improvements. Pasternack reserves the right to make such changes as required. Unless otherwise stated, all specifications are nominal. Pasternack does not make any representation or warranty regarding the suitability of the part described herein for any particular purpose, and Pasternack does not assume any liability arising out of the use of any part or documentation.

Pasternack Enterprises, Inc. • P.O. Box 16759, Irvine, CA 92623
Phone: (866) 727-8376 or (949) 261-1920 • **Fax:** (949) 261-7451
Sales@Pasternack.com • Techsupport@Pasternack.com

© 2018 Pasternack Enterprises All Rights Reserved

PE4059 CAD Drawing

N Female Connector Clamp/Solder (Captive Contact) Attachment for RG213, RG214, RG8, RG9, RG11, RG225, RG393, RG144, RG216, RG215

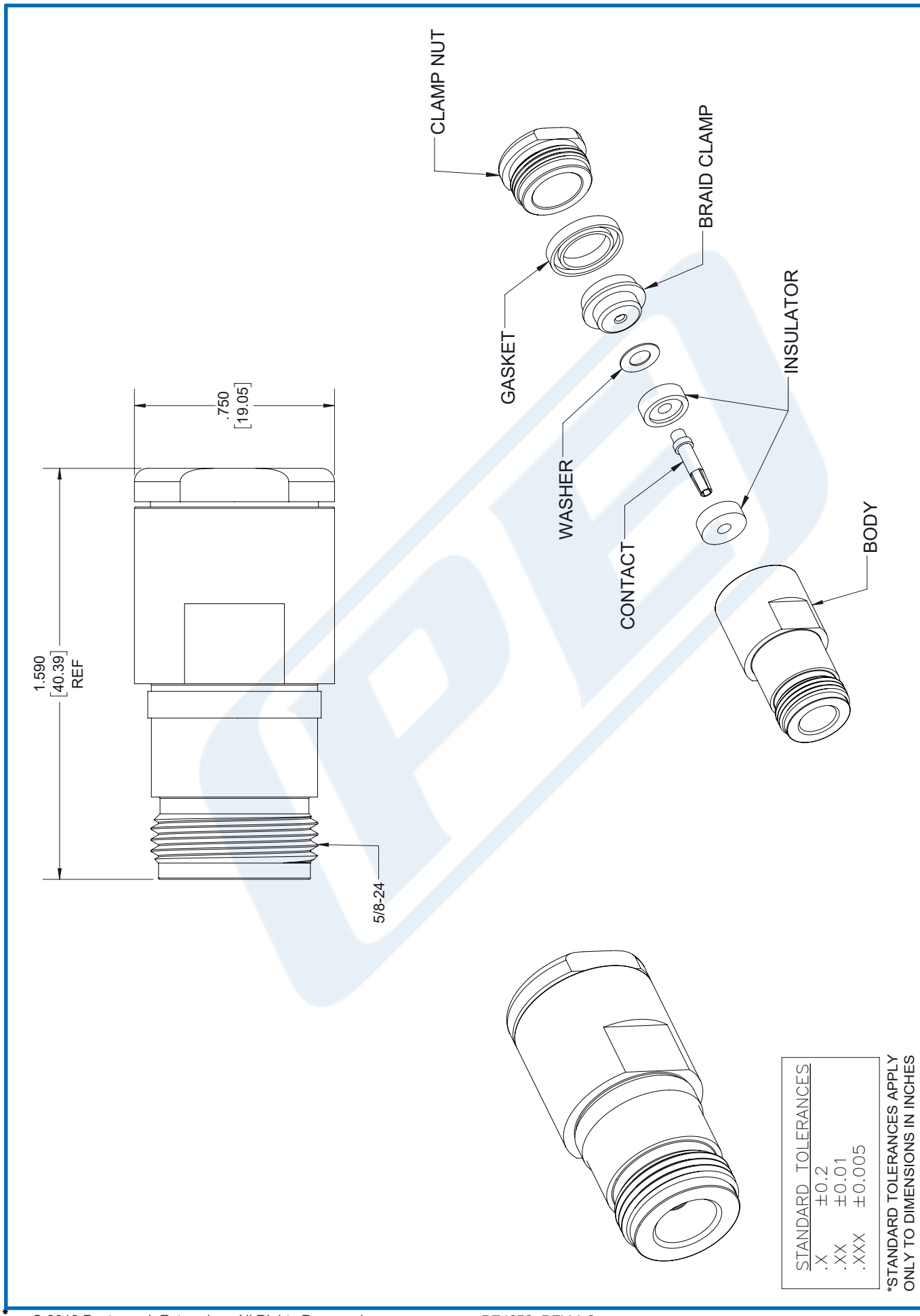

© 2018 Pasternack Enterprises All Rights Reserved

PASTERNACK®
THE ENGINEER'S RF SOURCE

Flexible RG393 Coax Cable Double Shielded with Tan FEP Jacket

TECHNICAL DATA SHEET RG393/U

- 50 Ohm Impedance
- Stranded Silver Plated Copper center conductor
- PTFE dielectric
- Double Silver Plated Copper Braid
- FEP Jacket Material 0.390 in diameter
- **Configuration**

Inner Conductor Material and Plating	Copper, Silver
Dielectric Type	PTFE
Shield Materials	Silver Plated Copper Braid, Silver Plated Copper Braid
Jacket Material and Color	FEP, Tan

Electrical Specifications

Impedance, Ohms	50
Maximum Operating Frequency, GHz	10
RF Shielding, dB	60
Capacitance, pF/ft [pF/m]	29.4 [96.46]
Maximum Operating Voltage, Volts	5,000
Dielectric Withstanding Voltage, Vrms	7,500

Electrical Specifications by Frequency

Frequency 1

Frequency, MHz	10
Attenuation, dB/100ft [dB/100m]	0.6 [1.97]
Power Handling, KWatts	25

Frequency 2

Frequency, MHz	100
Attenuation, dB/100ft [dB/100m]	2.1 [6.89]
Power Handling, KWatts	6.3

Frequency 3

Frequency, MHz	1000
Attenuation, dB/100ft [dB/100m]	7.5 [24.61]
Power Handling, KWatts	1.7

Frequency 4

Frequency, GHz	5
Attenuation, dB/100ft [dB/100m]	21 [68.9]
Power Handling, Watts	620

Frequency 5

Frequency, GHz	10
Attenuation, dB/100ft [dB/100m]	35 [114.83]
Power Handling, Watts	350

Click the following link (or enter part number in "SEARCH" on website) to obtain additional part information including price, inventory and certifications: Flexible RG393 Coax Cable Double Shielded with Tan FEP Jacket RG393/U

Pasternack Enterprises, Inc. • P.O. Box 16759, Irvine, CA 92623
Phone: (866) 727-8376 or (949) 261-1920 • **Fax:** (949) 261-7451
Sales@Pasternack.com • Techsupport@Pasternack.com

© 2014 Pasternack Enterprises All Rights Reserved

PASTERNACK®
THE ENGINEER'S RF SOURCE

Flexible RG393 Coax Cable Double Shielded with Tan FEP Jacket

TECHNICAL DATA SHEET RG393/U

Mechanical Specifications

Temperature

Operating Range, deg C	-55 to +200

Inner Conductor

Number of Strands	7
Material	Copper
Plating	Silver
Diameter, in [mm]	0.094 [2.39]

Dielectric:

Type	PTFE
Diameter, in [mm]	0.285 [7.24]

Shield:

Number of	2
Material 1	Silver Plated Copper Braid
Material 2	Silver Plated Copper Braid
Diameter, in [mm]	0.34 [8.64]

Jacket:

Material	FEP
Diameter, in [mm]	0.39 [9.91]
Color	Tan
One Time Minimum Bend Radius, in [mm]	3.9 [99.06]
Weight, lbs/ft [Kg/m]	0.16 [0.24]

Compliance Certifications (visit www.Pasternack.com for current document)

RoHS Compliant	
REACH Compliant	06/18/2010

Plotted and Other Data

Notes:

- Values at +25 °C, sea level

Flexible RG393 Coax Cable Double Shielded with Tan FEP Jacket from Pasternack Enterprises has same day shipment for domestic and International orders. Our RF, microwave and millimeter wave products maintain a 99% availability and are part of the broadest selection in the industry.

Click the following link (or enter part number in "SEARCH" on website) to obtain additional part information including price, inventory and certifications: Flexible RG393 Coax Cable Double Shielded with Tan FEP Jacket RG393/U

URL: http://www.pasternack.com/flexible-0.390-rg393-50-ohm-coax-cable-fep-jacket-rg393-u-p.aspx

The information contained in this document is accurate to the best of our knowledge and representative of the part described herein. It may be necessary to make modifications to the part and/or the documentation of the part, in order to implement improvements. Pasternack reserves the right to make such changes as required. Unless otherwise stated, all specifications are nominal. Pasternack does not make any representation or warranty regarding the suitability of the part described herein for any particular purpose, and Pasternack does not assume any liability arising out of the use of any part or documentation.

Pasternack Enterprises, Inc. • P.O. Box 16759, Irvine, CA 92623
Phone: (866) 727-8376 or (949) 261-1920 • **Fax:** (949) 261-7451
Sales@Pasternack.com • Techsupport@Pasternack.com

© 2014 Pasternack Enterprises All Rights Reserved

RG393/U CAD Drawing

Flexible RG393 Coax Cable Double Shielded with Tan FEP Jacket

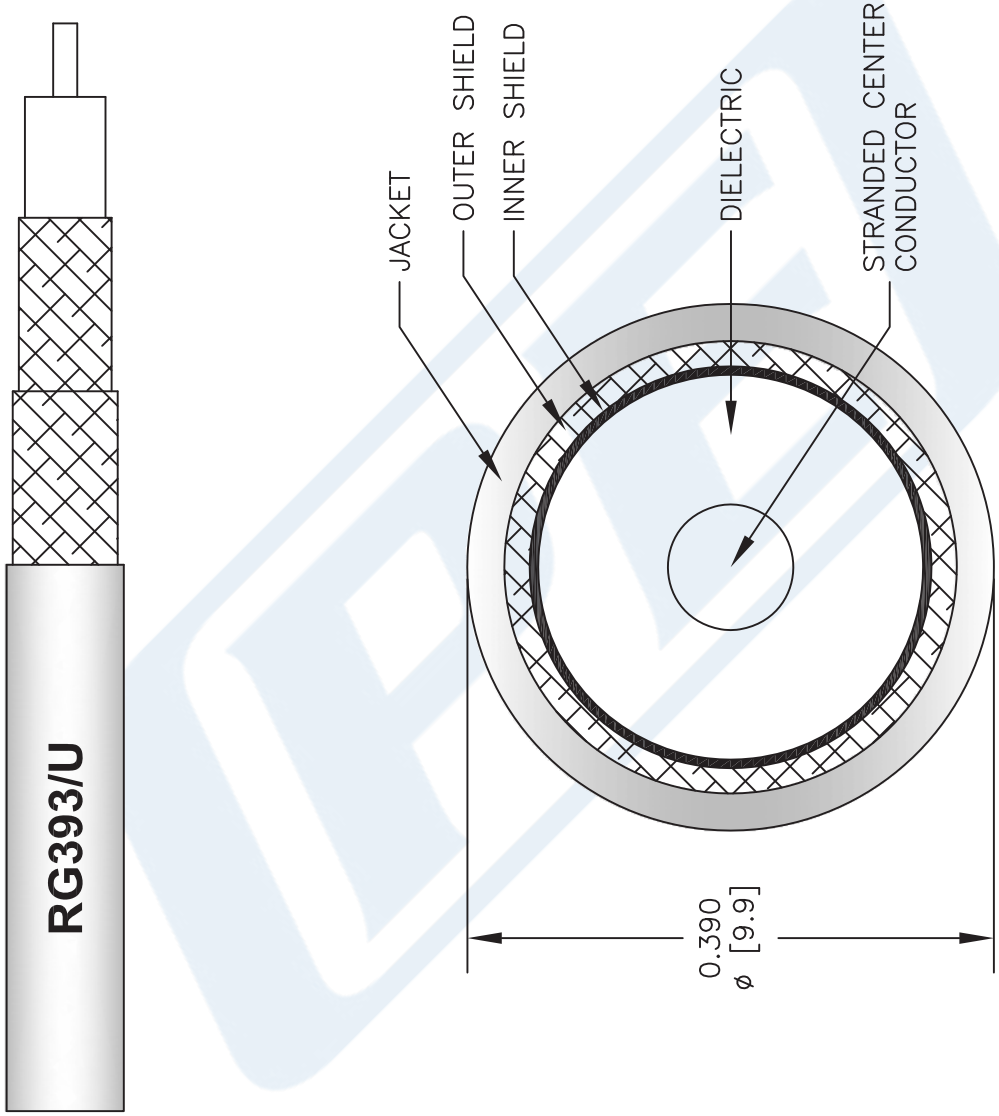

NOTES:
1. UNLESS OTHERWISE SPECIFIED ALL DIMENSIONS ARE NOMINAL.
2. ALL SPECIFICATIONS ARE SUBJECT TO CHANGE WITHOUT NOTICE AT ANY TIME.
3. DIMENSIONS ARE IN INCHES [mm].

DWG TITLE
RG393/U

FSCM NO. 53919

CAD FILE 110712-C | SCALE N/A | SIZE A | 2233

PASTERNACK®
Pasternack Enterprises, Inc.
P.O. Box 16759 | Irvine | CA | 92623
Phone: (949) 261-1920 | **Fax:** (949) 261-7451
Website: www.pasternack.com | **E-Mail:** sales@pasternack.com

© 2014 Pasternack Enterprises All Rights Reserved