PASTERNACK®
THE ENGINEER'S RF SOURCE

FME Jack Connector Crimp/Solder Attachment for RG58, RG303, RG141, PE-C195, PE-P195, LMR-195, 0.195 inch

Configuration

- FME Jack Connector
- 50 Ohms
- Straight Body Geometry
- RG58, RG303, RG141, PE-C195, PE-P195, LMR-195, 0.195 inch Interface Type
- Crimp/Solder Attachment

Features

- Gold Plated Brass Contact

Applications

- General Purpose Test
- Custom Cable Assemblies

Description

Pasternack's PE44146 FME jack connector with crimp/solder attachment for RG58, RG303, RG141, PE-C195, PE-P195, LMR-195 and 0.195 inch is part of our full line of RF components available for same-day shipping.

Our FME jack connector PE44146 datasheet specifications and drawing with dimensions are shown below in this PDF. Pasternack's broad catalog of RF, microwave and millimeter wave connectors allows designers to configure and customize their signal connections however they like. Whether the need is to provide an I/O for a board design, or simply create a custom cable assembly configuration, Pasternack has the right connector for the job. Pasternack can also expertly build your custom cable assemblies for you and ship same-day.

Mechanical Specifications

Size

Length	1.268 in [32.21 mm]
Width/Dia.	0.315 in [8.00 mm]
Weight	0.014 lbs [6.35 g]

Material Specifications

Description	Material	Plating
Contact	Brass	Gold
Insulation	PTFE	
Body	Brass	Nickel

Click the following link (or enter part number in "SEARCH" on website) to obtain additional part information including price, inventory and certifications: FME Jack Connector Crimp/Solder Attachment for RG58, RG303, RG141, PE-C195, PE-P195, LMR-195, 0.195 inch PE44146

Pasternack Enterprises, Inc. • P.O. Box 16759, Irvine, CA 92623
Phone: (866) 727-8376 or (949) 261-1920 • **Fax:** (949) 261-7451
Sales@Pasternack.com • Techsupport@Pasternack.com

© 2016 Pasternack Enterprises All Rights Reserved

FME Jack Connector Crimp/Solder Attachment for RG58, RG303, RG141, PE-C195, PE-P195, LMR-195, 0.195 inch

Compliance Certifications (see product page for current document)

Plotted and Other Data

Notes:

FME Jack Connector Crimp/Solder Attachment for RG58, RG303, RG141, PE-C195, PE-P195, LMR-195, 0.195 inch from Pasternack Enterprises has same day shipment for domestic and International orders. Our RF, microwave and millimeter wave products maintain a 99% availability and are part of the broadest selection in the industry.

Click the following link (or enter part number in "SEARCH" on website) to obtain additional part information including price, inventory and certifications: FME Jack Connector Crimp/Solder Attachment for RG58, RG303, RG141, PE-C195, PE-P195, LMR-195, 0.195 inch PE44146

URL: https://www.pasternack.com/fme-jack-standard-rg58-connector-pe44146-p.aspx

The information contained in this document is accurate to the best of our knowledge and representative of the part described herein. It may be necessary to make modifications to the part and/or the documentation of the part, in order to implement improvements. Pasternack reserves the right to make such changes as required. Unless otherwise stated, all specifications are nominal. Pasternack does not make any representation or warranty regarding the suitability of the part described herein for any particular purpose, and Pasternack does not assume any liability arising out of the use of any part or documentation.

Pasternack Enterprises, Inc. • P.O. Box 16759, Irvine, CA 92623
Phone: (866) 727-8376 or (949) 261-1920 • **Fax:** (949) 261-7451
Sales@Pasternack.com • Techsupport@Pasternack.com

© 2016 Pasternack Enterprises All Rights Reserved

PE44146 CAD Drawing

FME Jack Connector Crimp/Solder Attachment for RG58, RG303, RG141, PE-C195, PE-P195, LMR-195, 0.195 inch

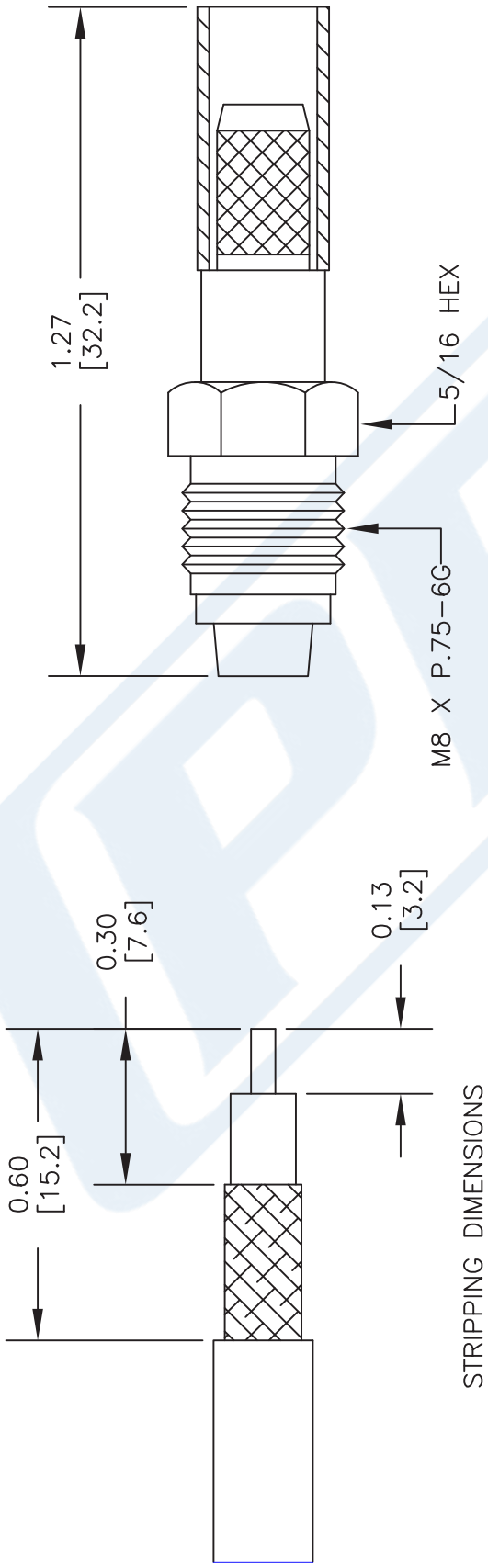

CRIMP SIZE REQUIRED

CONTACT: SOLDER
FERRULE: .213" HEX CRIMP TOOL

NOTES:
1. UNLESS OTHERWISE SPECIFIED ALL DIMENSIONS ARE NOMINAL.
2. ALL SPECIFICATIONS ARE SUBJECT TO CHANGE WITHOUT NOTICE AT ANY TIME.
3. DIMENSIONS ARE IN INCHES [mm].
4. FITS MIL-C-17 AND EQUIVALENT CABLES.

DWG TITLE
PE44146

FSCM NO. 53919

CAD FILE 062702 | SCALE N/A | SIZE A | 2233

PASTERNACK®
Pasternack Enterprises, Inc.
P.O. Box 16759 | Irvine | CA | 92623
Phone: (949) 261-1920 | **Fax:** (949) 261-7451
Website: www.pasternack.com | **E-Mail:** sales@pasternack.com

© 2016 Pasternack Enterprises All Rights Reserved

PASTERNACK®
THE ENGINEER'S RF SOURCE

N Male Connector Crimp/Crimp Attachment for PE-C195, PE-P195, RG58, RG141, RG303, LMR-195, 0.195 inch

Configuration

- N Male Connector
- MIL-STD-348A
- 50 Ohms
- Straight Body Geometry
- PE-C195, PE-P195, RG58, RG141, RG303, LMR-195, 0.195 inch Interface Type
- Crimp/Crimp Attachment

Features

- Max. Operating Frequency 11 GHz
- Good VSWR of 1.3:1
- Gold Plated Brass Contact
- 30 µin minimum contact plating

Applications

- General Purpose Test
- Custom Cable Assemblies

Description

Pasternack's PE44520 type N male connector with crimp/crimp attachment for PE-C195, PE-P195, RG58, RG141, RG303, LMR-195 and 0.195 inch is part of our full line of RF components available for same-day shipping. Our type N male connector operates up to a maximum frequency of 11 GHz and offers good VSWR of 1.3:1.

Our type N male connector PE44520 datasheet specifications and drawing with dimensions are shown below in this PDF. Pasternack's broad catalog of RF, microwave and millimeter wave connectors allows designers to configure and customize their signal connections however they like. Whether the need is to provide an I/O for a board design, or simply create a custom cable assembly configuration, Pasternack has the right connector for the job. Pasternack can also expertly build your custom cable assemblies for you and ship same-day.

Electrical Specifications

Description	Minimum	Typical	Maximum	Units
Frequency Range	DC		11	GHz
VSWR			1.3:1	
Operating Voltage (AC)			1,500	Vrms
Dielectric Withstanding Voltage (AC)			2,500	Vrms
Inner Conductor DC Resistance			1	mOhms
Outer Conductor DC Resistance			1	mOhms
Insulation Resistance	5,000			MOhms
RF Leakage	90			dB

Click the following link (or enter part number in "SEARCH" on website) to obtain additional part information including price, inventory and certifications: N Male Connector Crimp/Crimp Attachment for PE-C195, PE-P195, RG58, RG141, RG303, LMR-195, 0.195 inch PE44520

Pasternack Enterprises, Inc. • P.O. Box 16759, Irvine, CA 92623
Phone: (866) 727-8376 or (949) 261-1920 • **Fax:** (949) 261-7451
Sales@Pasternack.com • Techsupport@Pasternack.com

© 2016 Pasternack Enterprises All Rights Reserved

N Male Connector Crimp/Crimp Attachment for PE-C195, PE-P195, RG58, RG141, RG303, LMR-195, 0.195 inch

Performance by Frequency

Description	F1	F2	F3	F4	F5	Units
Frequency Range	DC to 10					GHz
Insertion Loss, Max	0.15					dB

Mechanical Specifications

Size

Length	1.36 in [34.54 mm]
Width/Dia.	0.83 in [21.08 mm]
Weight	0.069 lbs [31.3 g]
Mating Cycles	500 Cycles

Material Specifications

Description	Material	Plating
Contact	Brass	Gold 30 µin minimum
Insulation	PTFE	
Body	Brass	Tri-Metal
Coupling Nut	Brass	Tri-Metal

Environmental Specifications

Temperature

Operating Range	-65 to +165 deg C
Vibration	MIL-STD-202, Method 204, Condition B
Temperature Cycle	MIL-STD-202, Method 107, Condition B
Salt Spray	MIL-STD-202, Method 101, Condition B

Click the following link (or enter part number in "SEARCH" on website) to obtain additional part information including price, inventory and certifications: N Male Connector Crimp/Crimp Attachment for PE-C195, PE-P195, RG58, RG141, RG303, LMR-195, 0.195 inch PE44520

Pasternack Enterprises, Inc. • P.O. Box 16759, Irvine, CA 92623
Phone: (866) 727-8376 or (949) 261-1920 • **Fax:** (949) 261-7451
Sales@Pasternack.com • Techsupport@Pasternack.com

© 2016 Pasternack Enterprises All Rights Reserved

N Male Connector Crimp/Crimp Attachment for PE-C195, PE-P195, RG58, RG141, RG303, LMR-195, 0.195 inch

Compliance Certifications (see product page for current document)

Plotted and Other Data

Notes:

N Male Connector Crimp/Crimp Attachment for PE-C195, PE-P195, RG58, RG141, RG303, LMR-195, 0.195 inch from Pasternack Enterprises has same day shipment for domestic and International orders. Our RF, microwave and millimeter wave products maintain a 99% availability and are part of the broadest selection in the industry.

Click the following link (or enter part number in "SEARCH" on website) to obtain additional part information including price, inventory and certifications: N Male Connector Crimp/Crimp Attachment for PE-C195, PE-P195, RG58, RG141, RG303, LMR-195, 0.195 inch PE44520

URL: https://www.pasternack.com/n-male-standard-pe-c195-0.195-connector-pe44520-p.aspx

The information contained in this document is accurate to the best of our knowledge and representative of the part described herein. It may be necessary to make modifications to the part and/or the documentation of the part, in order to implement improvements. Pasternack reserves the right to make such changes as required. Unless otherwise stated, all specifications are nominal. Pasternack does not make any representation or warranty regarding the suitability of the part described herein for any particular purpose, and Pasternack does not assume any liability arising out of the use of any part or documentation.

Pasternack Enterprises, Inc. • P.O. Box 16759, Irvine, CA 92623
Phone: (866) 727-8376 or (949) 261-1920 • **Fax:** (949) 261-7451
Sales@Pasternack.com • Techsupport@Pasternack.com

© 2016 Pasternack Enterprises All Rights Reserved

PE44520 CAD Drawing

N Male Connector Crimp/Crimp Attachment for PE-C195, PE-P195, RG58, RG141, RG303, LMR-195, 0.195 inch

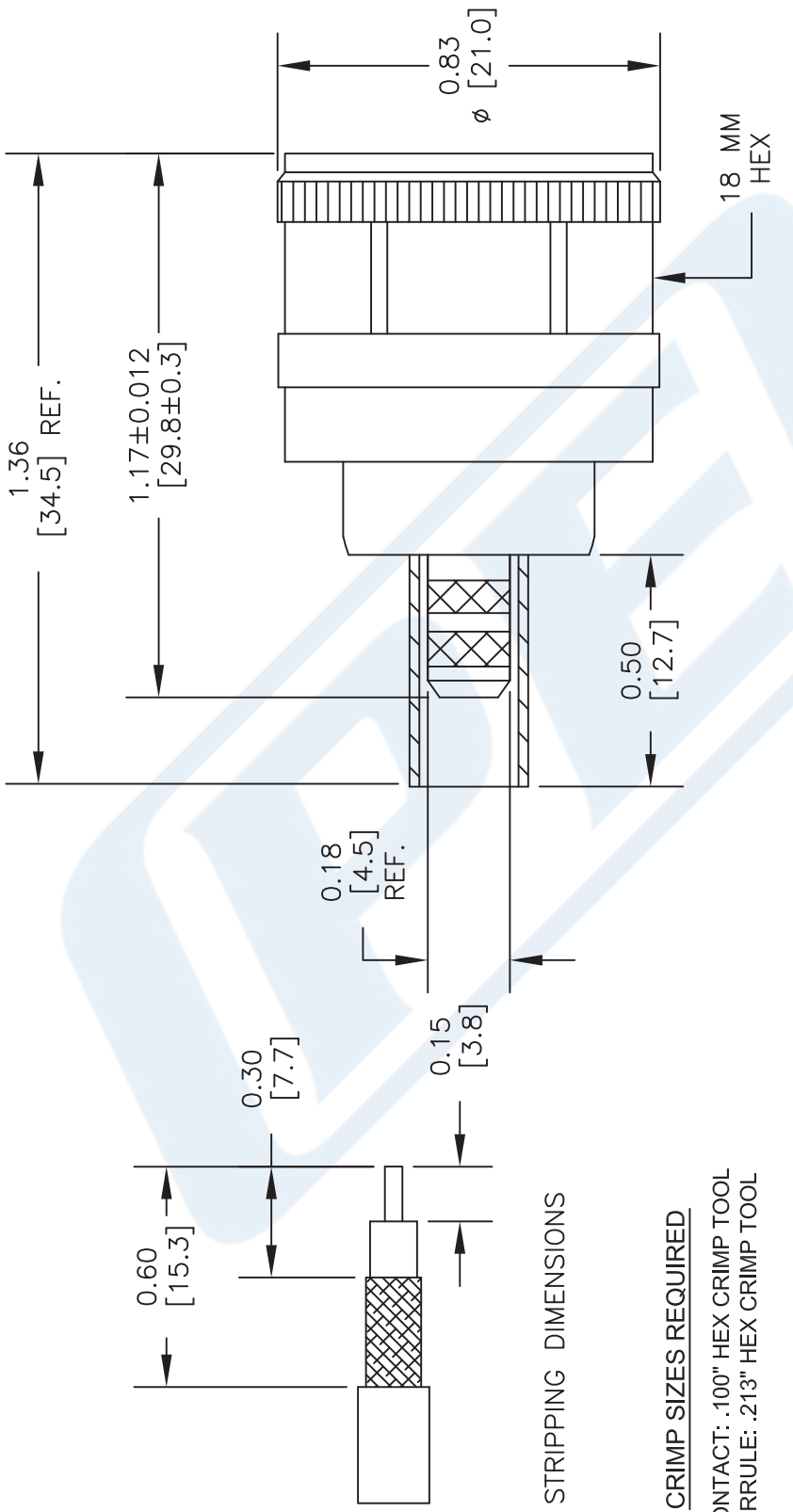

STRIPPING DIMENSIONS

CRIMP SIZES REQUIRED

CONTACT: .100" HEX CRIMP TOOL
FERRULE: .213" HEX CRIMP TOOL

STANDARD TOLERANCES	
.X	±0.008
.XX	±0.004
.XXX	±0.002

*STANDARD TOLERANCES APPLY ONLY TO DIMENSIONS IN INCHES

NOTES:
1. UNLESS OTHERWISE SPECIFIED ALL DIMENSIONS ARE NOMINAL.
2. ALL SPECIFICATIONS ARE SUBJECT TO CHANGE WITHOUT NOTICE AT ANY TIME.
3. DIMENSIONS ARE IN INCHES [mm].

DWG TITLE
PE44520

FSCM NO. 53919

CAD FILE 032316 | SCALE N/A | SIZE A | XXXX

PASTERNACK®
THE ENGINEER'S RF SOURCE
Pasternack Enterprises, Inc.
P.O. Box 16759 | Irvine | CA | 92623
Phone: (949) 261-1920 | **Fax:** (949) 261-7451
Website: www.pasternack.com | **E-Mail:** sales@pasternack.com

© 2016 Pasternack Enterprises All Rights Reserved

TIMES MICROWAVE SYSTEMS

LMR®-195
Flexible Low Loss Communications Coax

Ideal for...

- Jumper Assemblies in Wireless Communications Systems
- Short Antenna Feeder runs
- Any application (e.g. WLL, GPS, LMR, WLAN, WISP, WiMax, SCADA, Mobile Antennas) requiring an easily routed, low loss RF cable
- Drop-in replacement for RG-58 and RG-142

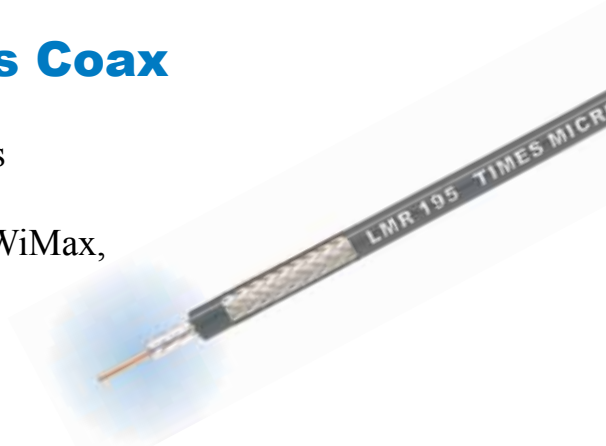

• **LMR®** standard is a UV Resistant Polyethylene jacketed cable designed for 20-year service outdoor use. The bending and handling characteristics are significantly better than air-dielectric and corrugated hard-line cables.

• **LMR®- DB** is identical to standard LMR plus has the advantage of being watertight. The addition of waterproofing compound in and around the foil/braid insures continuous reliable service should the jacket be inadvertently damaged during installation or in the future.

• **LMR®- FR** is a non-halogen (non-toxic), low smoke, fire retardant cable designed for in-building runs that can be routed anywhere except air handling plenums. LMR-FR is UL/NEC & CSA rated 'CMR' and 'FT4' respectively, meets FAA FAR25 requirements and is MSHA-P for mining applications.

• **LMR®- FR-PVC** is a general-purpose indoor cable and has a UL/NEC & CSA rating of 'CMR' and 'FT4' respectively. It is less expensive than LMR-FR, however it emits toxic fumes (HCL) and greater smoke density when burned.

• **LMR®- PVC** is designed for low loss general-purpose applications and is somewhat more flexible than the standard polyethylene jacketed LMR.

• **LMR®- PVC-W** is a white-jacketed version of LMR-PVC for marine and other applications where color compatibility is desired.

• **LMR®- MA** is a flexible cable designed specifically for mobile antenna applications. It has a PVC jacket and un-bonded aluminum tape to facilitate end stripping with automated equipment.

• **Flexibility** and bendability are hallmarks of the LMR-195 cable design. The flexible outer conductor enables the tightest bend radius available for any cable of similar size and performance.

• **Low Loss** is another hallmark feature of LMR-195. Size for size LMR has the lowest loss of any flexible cable and comparable loss to semirigid hard-line cables.

• **RF Shielding** is 50 dB greater than typical single shielded coax (40 dB). The multi-ply bonded foil outer conductor is rated conservatively at > 90 dB (i.e. >180 dB between two adjacent cables).

• **Weatherability**: LMR-195 cables designed for outdoor exposure incorporate the best materials for UV resistance and have life expectancy in excess of 20 years.

• **Connectors**: A wide variety of connectors are available for LMR-195 cable, including all common interface types, reverse polarity, and a choice of solder or non-solder center pins. Most LMR connectors employ crimp outer attachment using standard hex crimp sizes.

• **Cable Assemblies**: All LMR-195 cable types are available as pre-terminated cable assemblies. Refer to the section on FlexTech for further details.

Part Description				Stock
Part Number	Application	Jacket	Color	Code
LMR-195	Outdoor	PE	Black	54110
LMR-195-DB	Outdoor/Watertight	PE	Black	54113
LMR-195-FR	Indoor/Outdoor Riser CMR	FRPE	Black	54111
LMR-195-FR-W	Indoor/Outdoor Riser CMR	FRPE	White	54158
LMR-195-FR-PVC	Indoor/Outdoor Riser CMR	FRPVC	Black	54105
LMR-195-MA	Mobile Antennas	PVC	Black	54210
LMR-195-PVC	General Purpose	PVC	Black	54215
LMR-195-PVC-W	General Purpose	PVC	White	54199

Construction Specifications			
Description	Material	In.	(mm)
Inner Conductor	Solid BC	0.037	(0.94)
Dielectric	Foam PE	0.110	(2.79)
Outer Conductor	Aluminum Tape	0.116	(2.95)
Overall Braid	Tinned Copper	0.139	(3.53)
Jacket	(see table above)	0.195	(4.95)

Mechanical Specifications

Performance Property	Units	US	(metric)
Bend Radius: installation	in. (mm)	0.5	(12.7)
Bend Radius: repeated	in. (mm)	2.0	(50.8)
Bending Moment	ft-lb (N-m)	0.2	(0.27)
Weight	lb/ft (kg/m)	0.021	(0.03)
Tensile Strength	lb (kg)	40	(18.2)
Flat Plate Crush	lb/in. (kg/mm)	15	(0.27)

Environmental Specifications

Performance Property	°F	°C
Installation Temperature Range	-40/+185	-40/+85
Storage Temperature Range	-94/+185	-70/+85
Operating Temperature Range	-40/+185	-40/+85

Electrical Specifications

Performance Property	Units	US	(metric)
Velocity of Propagation	%	76	
Dielectric Constant	NA	1.56	
Time Delay	nS/ft (nS/m)	1.27	(4.17)
Impedance	ohms	50	
Capacitance	pF/ft (pF/m)	25.4	(83.3)
Inductance	uH/ft (uH/m)	0.064	(0.21)
Shielding Effectiveness	dB	>90	
DC Resistance			
Inner Conductor	ohms/1000ft (/km)	7.6	(24.9)
Outer Conductor	ohms/1000ft (/km)	4.9	(16.1)
Voltage Withstand	Volts DC	1000	
Jacket Spark	Volts RMS	3000	
Peak Power	kW	2.5	

Attenuation vs. Frequency (typical)

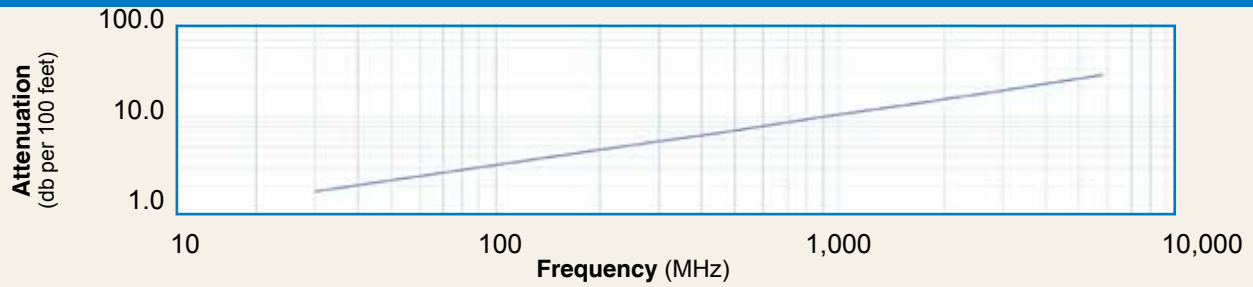

Frequency (MHz)	30	50	150	220	450	900	1500	1800	2000	2500	5800
Attenuation dB/100 ft	2.0	2.5	4.4	5.4	7.8	11.1	14.5	16.0	16.9	19.0	29.9
Attenuation dB/100 m	6.5	8.4	14.6	17.7	25.5	36.5	47.7	52.5	55.4	62.4	98.1
Avg. Power kW	0.89	0.68	0.39	0.32	0.22	0.16	0.12	0.11	0.10	0.09	0.06

Calculate Attenuation = (0.356859) • $\sqrt{FMHz}$ + (0.000470) • FMHz (interactive calculator available at http://www.timesmicrowave.com/cable_calculators)
Attenuation: VSWR=1.0 ; Ambient = +25°C (77°F) **Power:** VSWR=1.0; Ambient = +40°C; Inner Conductor = 100°C (212°F);
Sea Level; dry air; atmospheric pressure; no solar loading

TC-195-NM

TC-195-SM

TC-195-NM-RA-D

TC-195-TM

Connectors

Interface	Description	Part Number	Stock Code	VSWR** Freq. (GHz)	Coupling Nut	Inner Contact Attach	Outer Contact Attach	Finish* Body /Pin	Length in (mm)	Width in (mm)	Weight lb (g)
N male	Straight Plug	TC-195-NM	3190-1555	<1.25:1 (2.5)	Knurl	Solder	Crimp	S/G	1.5 (38.1)	0.75 (19.1)	0.073 (33.1)
N male	Right Angle	TC-195-NMH-RA-D	3190-2425	<1.35:1 (6)	Hex/Knurl	Solder	Crimp	A/G	1.3 (32.1)	1.19 (30.1)	0.083 (37.5)
SMA male	Straight Plug	TC-195-SM	3190-1553	<1.25:1 (2.5)	Hex	Solder	Crimp	SS/G	1.0 (25.4)	0.32 (8.1)	0.015 (6.8)
TNC male	Straight Plug	TC-195-TM	3190-1554	<1.25:1 (2.5)	Knurl	Solder	Crimp	S/G	1.4 (35.6)	0.59 (15.0)	0.045 (20.4)

* Finish metals: N=Nickel, S=Silver, G=Gold, SS=Stainless Steel, A=Alballoy **VSWR spec based on 3 foot cable with a connector pair

Install Tools

Type	Part Number	Stock Code	Description
Crimp Tool	CT-240/200/195/100	3190-667	Crimp tool for LMR-100,195, 200 and 240 connectors
Cutting Tool	CCT-01	3190-1544	Cable end flush cut tool
Deburr Tool	DBT-U	3192-001	Removes center conductor rough edges
Replacement Blade	RB-01	3190-1609	Replacement blade for cutting tool

CT-240/200/195/100

DBT-U

CCT-01