PASTERNACK®
THE ENGINEER'S RF SOURCE

Mini SMP Female Right Angle Connector Solder Attachment for PE-SR405AL, PE-SR405FL, PE-SR405FLJ, PE-SR405TN, RG405

RF Connectors Technical Data Sheet PE44494

Configuration

- Mini SMP Female Connector
- MIL-STD-348A
- 50 Ohms
- Right Angle Body Geometry
- PE-SR405AL, PE-SR405FL, PE-SR405FLJ, PE-SR405TN, RG405 Interface Type
- Solder Attachment

Features

- Max. Operating Frequency 65 GHz
- Gold Plated Beryllium Copper Contact
- Blind Mate Connector

Applications

- General Purpose Test
- Custom Cable Assemblies

Description

Pasternack's PE44494 Mini SMP female right angle connector with solder attachment for PE-SR405AL, PE-SR405FL, PE-SR405FLJ, PE-SR405TN and RG405 is part of our full line of RF components available for same-day shipping. Our Mini SMP female connector operates up to a maximum frequency of 65 GHz. The Pasternack blind mate connector is ideal for applications where direct visual or tactile access to the connection point is not possible, for example, when two circuit boards need to be mated. Its right angle body geometry allows for easier connections in tight spaces.

Our Mini SMP female right angle connector PE44494 datasheet specifications and drawing with dimensions are shown below in this PDF. Pasternack's broad catalog of RF, microwave and millimeter wave connectors allows designers to configure and customize their signal connections however they like. Whether the need is to provide an I/O for a board design, or simply create a custom cable assembly configuration, Pasternack has the right connector for the job. Pasternack can also expertly build your custom cable assemblies for you and ship same-day.

Electrical Specifications

Description	Minimum	Typical	Maximum	Units
Frequency Range	DC		65	GHz
Operating Voltage (AC)			325	Vrms
Inner Conductor DC Resistance			6	mOhms
Outer Conductor DC Resistance			2	mOhms
Insulation Resistance	5,000			MOhms

Performance by Frequency

Description	F1	F2	F3	F4	F5	Units
Frequency Range	DC to 6	6 to 12	12 to 18			GHz
VSWR, Max	1.11:1	1.23:1	1.33:1			

Click the following link (or enter part number in "SEARCH" on website) to obtain additional part information including price, inventory and certifications: Mini SMP Female Right Angle Connector Solder Attachment for PE-SR405AL, PE-SR405FL, PE-SR405FLJ, PE-SR405TN, RG405 PE44494

Pasternack Enterprises, Inc. • P.O. Box 16759, Irvine, CA 92623
Phone: (866) 727-8376 or (949) 261-1920 • **Fax:** (949) 261-7451
Sales@Pasternack.com • Techsupport@Pasternack.com

© 2016 Pasternack Enterprises All Rights Reserved

Mini SMP Female Right Angle Connector Solder Attachment for PE-SR405AL, PE-SR405FL, PE-SR405FLJ, PE-SR405TN, RG405

Electrical Specification Notes:
Insertion loss = 0.05 x sqrt(fGHz) dB max up to 18 GHz.

Mechanical Specifications

Size

Length	0.24 in [6.1 mm]
Width/Dia.	0.138 in [3.51 mm]
Height	0.24 in [6.1 mm]
Weight	0.00078 lbs [0.35 g]

Material Specifications

Description	Material	Plating
Contact	Beryllium Copper	Gold
Insulation	PTFE	
Outer Conductor	Beryllium Copper	Gold
Body	Brass	Gold

Mechanical Specification Notes:
Mating cycles: 500 (smooth bore), 100 (full detent) minimum.

Environmental Specifications

Temperature

Operating Range	-55 to +155 deg C
Humidity	MIL-STD-202, Method 106
Shock	MIL-STD-202, Method 213, Condition A
Vibration	MIL-STD-202, Method 204, Condition A
Thermal Shock	MIL-STD-202, Method 107, Condition B

Click the following link (or enter part number in “SEARCH” on website) to obtain additional part information including price, inventory and certifications: Mini SMP Female Right Angle Connector Solder Attachment for PE-SR405AL, PE-SR405FL, PE-SR405FLJ, PE-SR405TN, RG405 PE44494

Pasternack Enterprises, Inc. • P.O. Box 16759, Irvine, CA 92623
Phone: (866) 727-8376 or (949) 261-1920 • **Fax:** (949) 261-7451
Sales@Pasternack.com • Techsupport@Pasternack.com

© 2016 Pasternack Enterprises All Rights Reserved

PASTERNACK
THE ENGINEER'S RF SOURCE

Mini SMP Female Right Angle Connector Solder Attachment for PE-SR405AL, PE-SR405FL, PE-SR405FLJ, PE-SR405TN, RG405

Compliance Certifications (see product page for current document)

Plotted and Other Data

Notes:

Mini SMP Female Right Angle Connector Solder Attachment for PE-SR405AL, PE-SR405FL, PE-SR405FLJ, PE-SR405TN, RG405 from Pasternack Enterprises has same day shipment for domestic and International orders. Our RF, microwave and millimeter wave products maintain a 99% availability and are part of the broadest selection in the industry.

Click the following link (or enter part number in "SEARCH" on website) to obtain additional part information including price, inventory and certifications: Mini SMP Female Right Angle Connector Solder Attachment for PE-SR405AL, PE-SR405FL, PE-SR405FLJ, PE-SR405TN, RG405 PE44494

URL: https://www.pasternack.com/mini-smp-female-standard-pe-sr405al-pe-sr405fl-rg405-connector-pe44494-p.aspx

The information contained in this document is accurate to the best of our knowledge and representative of the part described herein. It may be necessary to make modifications to the part and/or the documentation of the part, in order to implement improvements. Pasternack reserves the right to make such changes as required. Unless otherwise stated, all specifications are nominal. Pasternack does not make any representation or warranty regarding the suitability of the part described herein for any particular purpose, and Pasternack does not assume any liability arising out of the use of any part or documentation.

Pasternack Enterprises, Inc. • P.O. Box 16759, Irvine, CA 92623
Phone: (866) 727-8376 or (949) 261-1920 • **Fax:** (949) 261-7451
Sales@Pasternack.com • Techsupport@Pasternack.com

© 2016 Pasternack Enterprises All Rights Reserved

PE44494 CAD Drawing

Mini SMP Female Right Angle Connector Solder Attachment for PE-SR405AL, PE-SR405FL, PE-SR405FLJ, PE-SR405TN, RG405

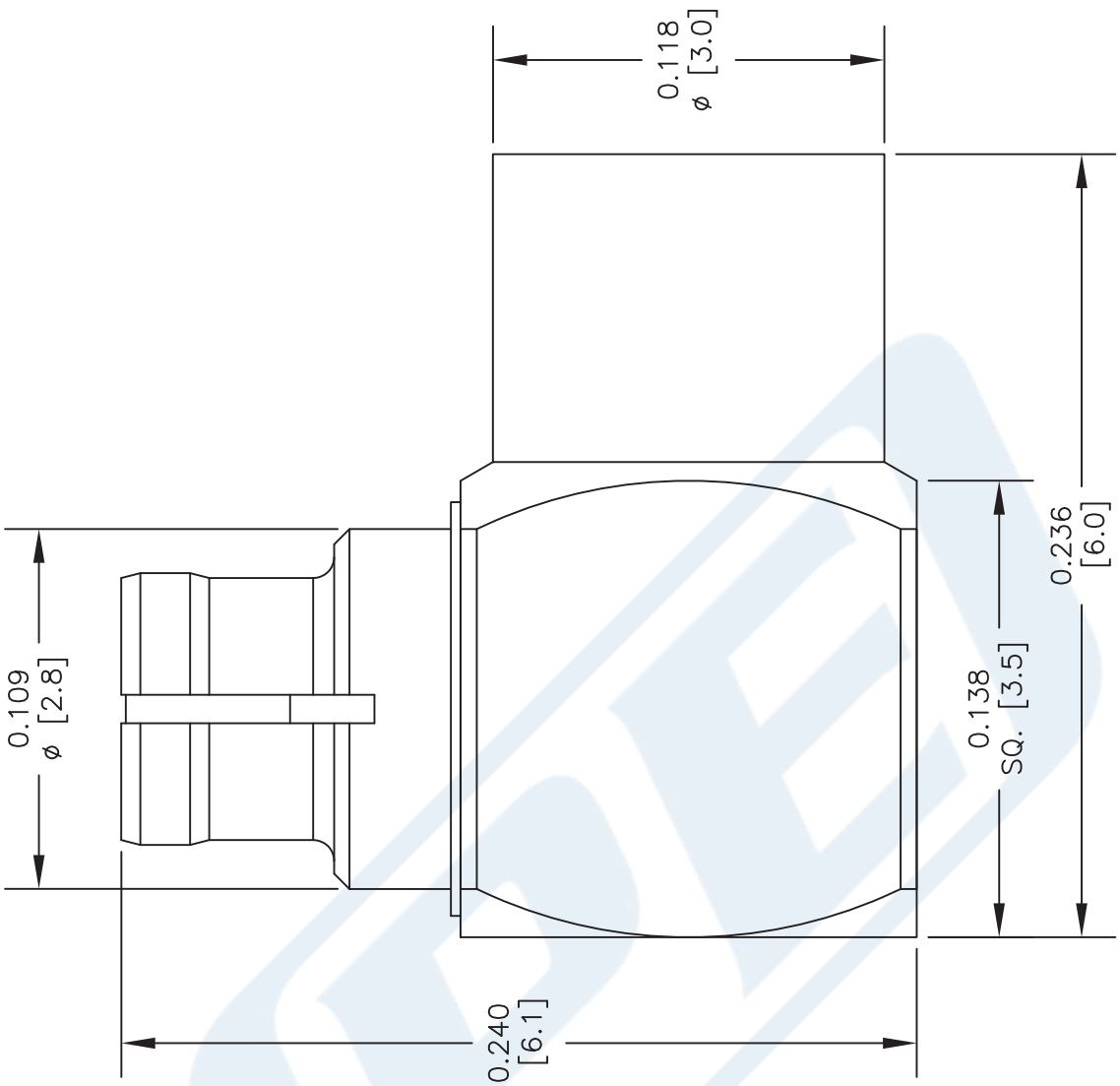

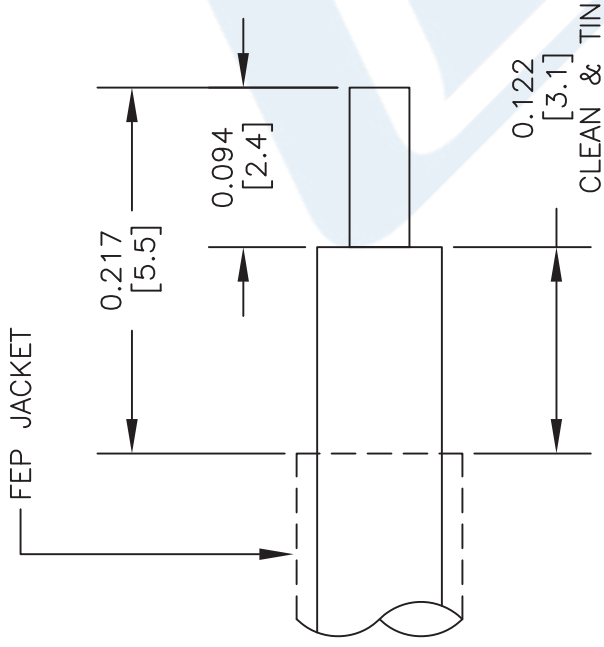

STRIPPING DIMENSIONS

ASSEMBLY PROCEDURES

1. STRIP CABLE AS SHOWN. DO NOT NICK CENTER CONDUCTOR.
2. BEFORE SOLDERING TO BODY CLEAN & TIN CABLE OUTER CONDUCTOR.
3. SOLDER CONTACT TO CENTER CONDUCTOR.
4. INSERT CABLE INTO BODY UNTIL OUTER CONDUCTOR BOTTOMS OUT. SOLDER OUTER CONDUCTOR TO BODY.

NOTES:
1. UNLESS OTHERWISE SPECIFIED ALL DIMENSIONS ARE NOMINAL.
2. ALL SPECIFICATIONS ARE SUBJECT TO CHANGE WITHOUT NOTICE AT ANY TIME.
3. DIMENSIONS ARE IN INCHES [mm].
4. FITS MIL-C-17 AND EQUIVALENT CABLES.

CAD FILE	081213	SCALE N/A	SIZE A	2233

DWG TITLE **PE44494**

FSCM NO. 53919

PASTERNACK®
Pasternack Enterprises, Inc.
P.O. Box 16759 | Irvine | CA | 92623
Phone: (949) 261-1920 | **Fax:** (949) 261-7451
Website: www.pasternack.com | **E-Mail:** sales@pasternack.com

© 2016 Pasternack Enterprises All Rights Reserved

PASTERNACK®
THE ENGINEER'S RF SOURCE

1.85mm Male Connector Solder Attachment for PE-SR405AL, PE-SR405FL, PE-SR405FLJ, PE-SR405TN, RG405, Direct Solder without Center Contact

RF Connectors Technical Data Sheet PE44336

Configuration

- 1.85mm Male Connector
- 50 Ohms
- Straight Body Geometry
- PE-SR405AL, PE-SR405FL, PE-SR405FLJ, PE-SR405TN, RG405 Interface Type
- Solder Attachment
- 1/4 inch Hex

Features

- Max. Operating Frequency 60 GHz
- Good VSWR of 1.33:1
- Gold over Nickel Plated Beryllium Copper Contact
- Contact plating according to MIL-G-45204

Applications

- General Purpose Test
- Custom Cable Assemblies

Description

Pasternack's PE44336 1.85mm male connector with solder attachment for PE-SR405AL, PE-SR405FL, PE-SR405FLJ, PE-SR405TN and RG405 is part of our full line of RF components available for same-day shipping. Our 1.85mm male connector operates up to a maximum frequency of 60 GHz and offers good VSWR of 1.33:1.

Our 1.85mm male connector PE44336 datasheet specifications and drawing with dimensions are shown below in this PDF. Pasternack's broad catalog of RF, microwave and millimeter wave connectors allows designers to configure and customize their signal connections however they like. Whether the need is to provide an I/O for a board design, or simply create a custom cable assembly configuration, Pasternack has the right connector for the job. Pasternack can also expertly build your custom cable assemblies for you and ship same-day.

Electrical Specifications

Description	Minimum	Typical	Maximum	Units
Frequency Range	DC		60	GHz
VSWR			1.33:1	
Insertion Loss			0.39	dB

Electrical Specification Notes:
Insertion loss: 0.05 x sqrt(fGHz) dB.

Mechanical Specifications

Size	
Length	0.531 in [13.49 mm]
Width/Dia.	0.312 in [7.92 mm]
Weight	0.007 lbs [3.18 g]
Mating Cycles	500 Cycles
Mating Torque	8 to 10 in-lbs [0.90 to 1.13 Nm]

Click the following link (or enter part number in "SEARCH" on website) to obtain additional part information including price, inventory and certifications: 1.85mm Male Connector Solder Attachment for PE-SR405AL, PE-SR405FL, PE-SR405FLJ, PE-SR405TN, RG405, Direct Solder without Center Contact PE44336

Pasternack Enterprises, Inc. • P.O. Box 16759, Irvine, CA 92623
Phone: (866) 727-8376 or (949) 261-1920 • **Fax:** (949) 261-7451
Sales@Pasternack.com • Techsupport@Pasternack.com

© 2018 Pasternack Enterprises All Rights Reserved

1.85mm Male Connector Solder Attachment for PE-SR405AL, PE-SR405FL, PE-SR405FLJ, PE-SR405TN, RG405, Direct Solder without Center Contact

Material Specifications

Description	Material	Plating
Contact	Beryllium Copper	Gold over Nickel MIL-G-45204
Body	Stainless Steel	Gold over Nickel MIL-G-45204
Coupling Nut	Passivated Stainless Steel	ASTM-A380

Environmental Specifications

Temperature

Operating Range	-55 to +100 deg C
Vibration	MIL-STD-202, Method 204, Condition D (20 G's)
Salt Spray	MIL-STD-202, Method 101, Condition B, 5% salt solution

Compliance Certifications (see product page for current document)

Plotted and Other Data

Notes:

Assembly Instruction

1.85mm Male Connector Solder Attachment for PE-SR405AL, PE-SR405FL, PE-SR405FLJ, PE-SR405TN, RG405, Direct Solder without Center Contact from Pasternack Enterprises has same day shipment for domestic and International orders. Our RF, microwave and millimeter wave products maintain a 99.4% availability and are part of the broadest selection in the industry.

Click the following link (or enter part number in "SEARCH" on website) to obtain additional part information including price, inventory and certifications: 1.85mm Male Connector Solder Attachment for PE-SR405AL, PE-SR405FL, PE-SR405FLJ, PE-SR405TN, RG405, Direct Solder without Center Contact PE44336

URL: https://www.pasternack.com/1.85mm-male-pe-sr405al-pe-sr405fl-rg405-connector-pe44336-p.aspx

The information contained in this document is accurate to the best of our knowledge and representative of the part described herein. It may be necessary to make modifications to the part and/or the documentation of the part, in order to implement improvements. Pasternack reserves the right to make such changes as required. Unless otherwise stated, all specifications are nominal. Pasternack does not make any representation or warranty regarding the suitability of the part described herein for any particular purpose, and Pasternack does not assume any liability arising out of the use of any part or documentation.

Pasternack Enterprises, Inc. • P.O. Box 16759, Irvine, CA 92623
Phone: (866) 727-8376 or (949) 261-1920 • **Fax:** (949) 261-7451
Sales@Pasternack.com • Techsupport@Pasternack.com

© 2018 Pasternack Enterprises All Rights Reserved

© 2018 Pasternack Enterprises All Rights Reserved

PE44336 CAD Drawing

1.85mm Male Connector Solder Attachment for PE-SR405AL, PE-SR405FL, PE-SR405FLJ, PE-SR405TN, RG405, Direct Solder without Center Contact

ASSEMBLY PROCEDURES

1. STRIP CABLE AS SHOWN IN (A).

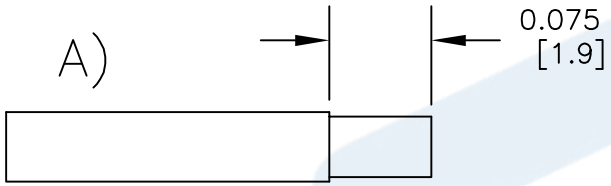

2. SLIDE BODY OVER CABLE UNTIL IT STOPS. SOLDER BODY ONTO CABLE.

3. STRIP CABLE AS SHOWN IN ASSEMBLY (B) THEN INSTALL COUPLING NUT, FORM POINT ON COAX CENTER CONDUCTOR AS SHOWN.

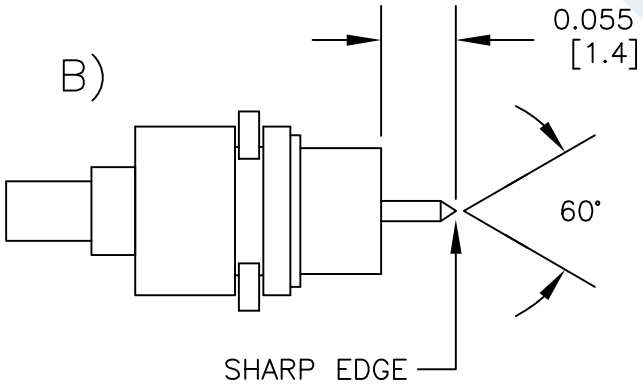

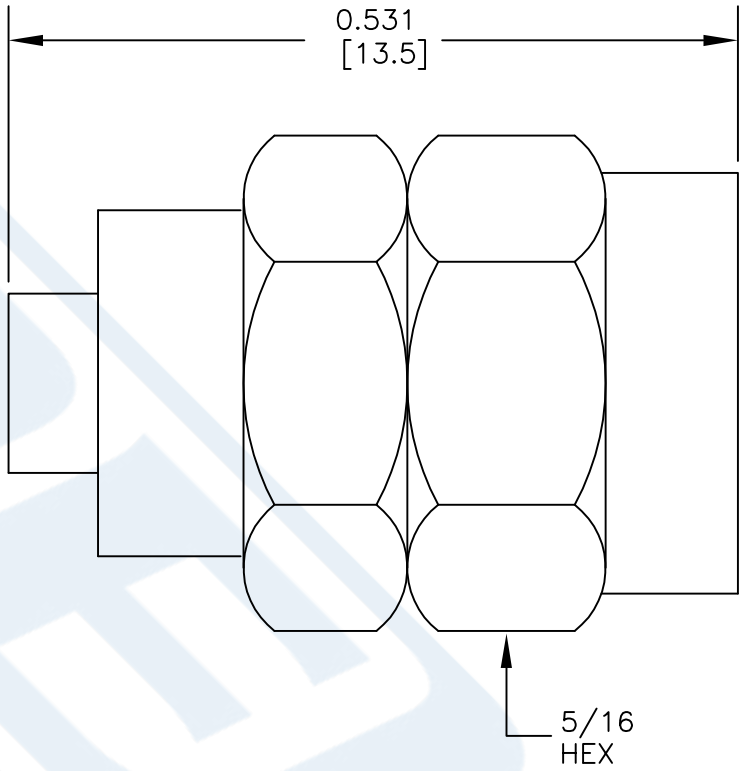

PASTERNACK
THE ENGINEER'S RF SOURCE
Pasternack Enterprises, Inc.
P.O. Box 16759 | Irvine | CA | 92623
Phone: (949) 261-1920 | **Fax:** (949) 261-7451
Website: www.pasternack.com | **E-Mail:** sales@pasternack.com

DWG TITLE

PE44336

FSCM NO. 53919

NOTES:
1. UNLESS OTHERWISE SPECIFIED ALL DIMENSIONS ARE NOMINAL.
2. ALL SPECIFICATIONS ARE SUBJECT TO CHANGE WITHOUT NOTICE AT ANY TIME.
3. DIMENSIONS ARE IN INCHES [mm].
4. FITS MIL-C-17 AND EQUIVALENT CABLES.

CAD FILE	SCALE	SIZE	
101414	N/A	A	150

PASTERNACK®
THE ENGINEER'S RF SOURCE

Formable 086 Semirigid Coax Cable with Tinned Braid Outer Conductor and Black FEP Jacket

RF Cables Technical Data Sheet PE-SR405FLJ

Configuration

- Formable Cable
- 1 Shield(s)

Features

- Dimensionally the same as standard solid outer conductor semi-rigid coax
- Standard semi-rigid connectors can be used
- Cable is hand formable and does not require special tools to bend
- Connectors are easily soldered to Tin soaked outer conductor
- Cable can be formed more than once without damage to outer conductor
- High RF Shielding >100 dB

Description

Formable semi-rigid coax is a hand formable version of standard semi-rigid that does not require complicated and costly pre-formed cable assemblies. Because the dimensions and electrical characteristics are so closely matched to semi-rigid coax, standard semi-rigid connectors can be used. The tin soaked copper braid outer shield provides excellent RF shielding. FEP Jacket reduces the chance of shorting exposed contacts or circuit conductors.

Electrical Specifications

Description	Minimum	Typical	Maximum	Units
Frequency Range	DC		61	GHz
Impedance		50		Ohms
Velocity of Propagation		69.5		%
Time Delay		1.43 [4.69]		ns/ft [ns/m]
Shielding Effectiveness	100			dB
Operating Voltage (AC)			1,500	Vrms
Inner Conductor DC Resistance			65.7	Ohms/1000ft
Outer Conductor DC Resistance			10.2	Ohms/1000ft
Nominal Capacitance		29 [95.14]		pF/ft [pF/m]

Performance by Frequency Band

Description	F1	F2	F3	F4	F5	Units
Frequency	0.5	1	5	10	20	GHz
Attenuation, Typ	15	22.5	54.9	81.2	120	dB/100ft
	49.21	73.82	180.12	266.4	393.7	dB/100m
Input Power (CW), Max	173.5	121.5	52.2	35.8	24.3	Watts

Click the following link (or enter part number in "SEARCH" on website) to obtain additional part information including price, inventory and certifications: Formable PE-SR405FLJ Coax Cable with Outer Conductor and Black FEP Jacket PE-SR-405FLJ

Pasternack Enterprises, Inc. • P.O. Box 16759, Irvine, CA 92623
Phone: (866) 727-8376 or (949) 261-1920 • **Fax:** (949) 261-7451
Sales@Pasternack.com • Techsupport@Pasternack.com

© 2017 Pasternack Enterprises All Rights Reserved

Formable 086 Semirigid Coax Cable with Tinned Braid Outer Conductor and Black FEP Jacket

RF Cables Technical Data Sheet PE-SR405FLJ

Mechanical Specifications

Diameter	0.105 in [2.67 mm]
Weight	0.015 lbs/ft [0.02 Kg/m]
Min. Bend Radius (Installation)	0.5 in [12.7 mm]
Min. Bend Radius (Repeated)	0.787 in [19.99 mm]

Construction Specifications

Description	Material and Plating	Diameter
Inner Conductor	Copper Clad Steel, Silver, 1 Strands	0.02 in [0.51 mm]
Conductor Type	Solid	
Dielectric	PTFE	0.062 in [1.57 mm]
Outer Conductor	Tinned Copper Composite Braid	0.085 in [2.16 mm]
Jacket	FEP, Black	0.105 in [2.67 mm]

Environmental Specifications

Temperature

Operating Range	-55 to +125 deg C

Compliance Certifications (see product page for current document)

Plotted and Other Data

Notes:

Formable 086 Semirigid Coax Cable with Tinned Braid Outer Conductor and Black FEP Jacket from Pasternack Enterprises has same day shipment for domestic and International orders. Our RF, microwave and millimeter wave products maintain a 99.4% availability and are part of the broadest selection in the industry.

Click the following link (or enter part number in “SEARCH” on website) to obtain additional part information including price, inventory and certifications: Formable PE-SR405FLJ Coax Cable with Outer Conductor and Black FEP Jacket PE-SR405FLJ

URL: https://www.pasternack.com/50-ohm-formable-086-semirigid-tinned-braid-outer-conductor-fep-jacket-black-pe-sr405flj-p.aspx

The information contained in this document is accurate to the best of our knowledge and representative of the part described herein. It may be necessary to make modifications to the part and/or the documentation of the part, in order to implement improvements. Pasternack reserves the right to make such changes as required. Unless otherwise stated, all specifications are nominal. Pasternack does not make any representation or warranty regarding the suitability of the part described herein for any particular purpose, and Pasternack does not assume any liability arising out of the use of any part or documentation.

Pasternack Enterprises, Inc. • P.O. Box 16759, Irvine, CA 92623
Phone: (866) 727-8376 or (949) 261-1920 • **Fax:** (949) 261-7451
Sales@Pasternack.com • Techsupport@Pasternack.com

© 2017 Pasternack Enterprises All Rights Reserved

PE-SR405FLJ CAD Drawing

Formable 086 Semirigid Coax Cable with Tinned Braid
Outer Conductor and Black FEP Jacket

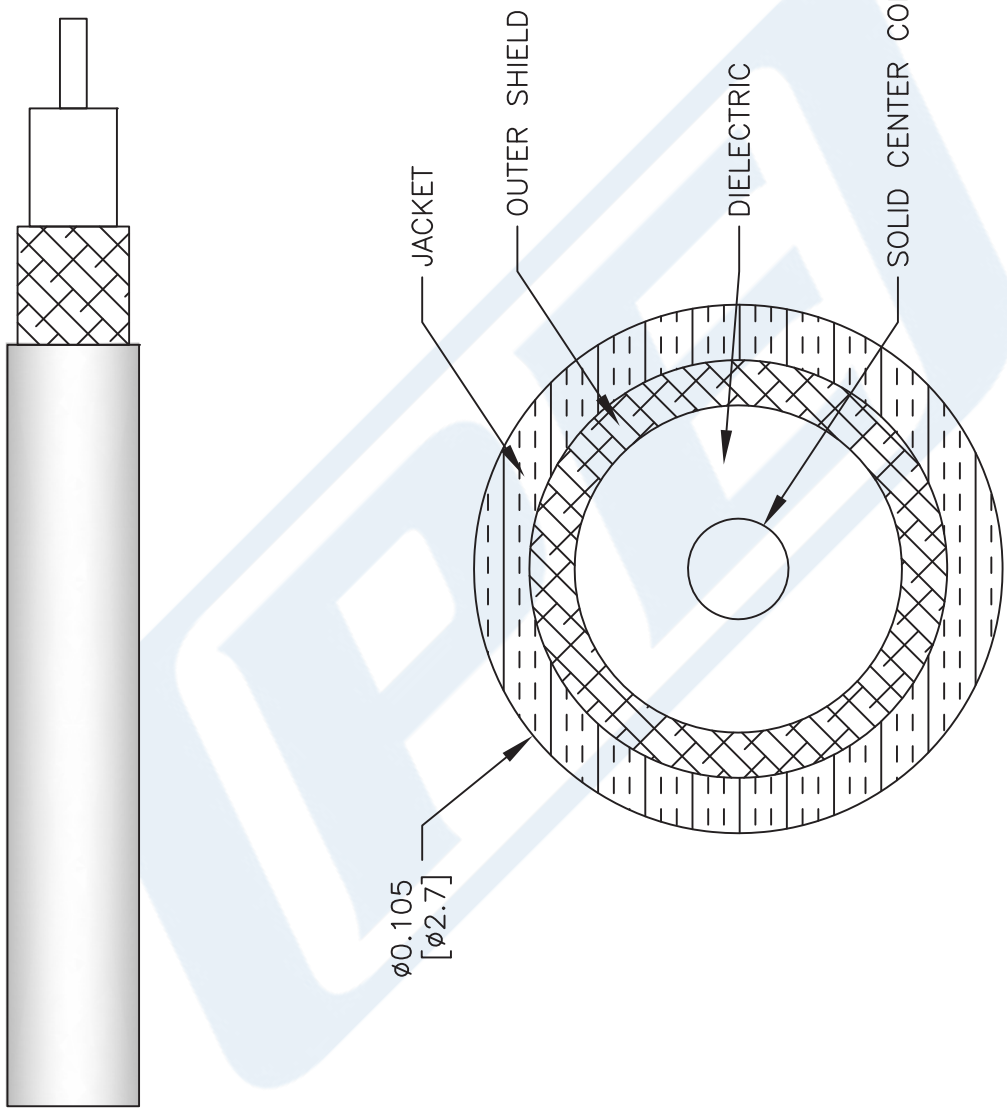

NOTES:
1. UNLESS OTHERWISE SPECIFIED ALL DIMENSIONS ARE NOMINAL.
2. ALL SPECIFICATIONS ARE SUBJECT TO CHANGE WITHOUT NOTICE AT ANY TIME.
3. DIMENSIONS ARE IN INCHES [mm].

DWG TITLE **PE-SR405FLJ**

CAD FILE 062817 | SCALE N/A | SIZE A | 2233

CAGE CODE 53919

PASTERNACK® THE ENGINEER'S RF SOURCE
Pasternack Enterprises, Inc.
P.O. Box 16759 | Irvine | CA | 92623
Phone: (949) 261-1920 | **Fax:** (949) 261-7451
Website: www.pasternack.com | **E-Mail:** sales@pasternack.com

© 2017 Pasternack Enterprises All Rights Reserved