QMA Male Connector Solder/Non-Solder Contact Attachment for PE-SR402AL, PE-SR402FL, PE-SR402FLJ, PE-SR402TN, RG402

RF Connectors Technical Data Sheet PE44496

Configuration

- QMA Male Connector
- 50 Ohms
- Straight Body Geometry
- PE-SR402AL, PE-SR402FL, PE-SR402FLJ, PE-SR402TN, RG402 Interface Type
- Solder/Non-Solder Contact Attachment

Features

- Max. Operating Frequency 18 GHz
- PIM levels lower than -130 dBc
- Gold over Nickel Plated Beryllium Copper Contact
- 1.27 µm minimum contact plating

Applications

- General Purpose Test
- Custom Cable Assemblies

Description

Pasternack's PE44496 QMA male connector with solder/non-solder contact attachment for PE-SR402AL, PE-SR402FL, PE-SR402FLJ, PE-SR402TN and RG402 is part of our full line of RF components available for same-day shipping. Our QMA male connector operates up to a maximum frequency of 18 GHz. The QMA male connector also has low passive intermodulation of -130 dBc.

Our QMA male connector PE44496 datasheet specifications and drawing with dimensions are shown below in this PDF. Pasternack's broad catalog of RF, microwave and millimeter wave connectors allows designers to configure and customize their signal connections however they like. Whether the need is to provide an I/O for a board design, or simply create a custom cable assembly configuration, Pasternack has the right connector for the job. Pasternack can also expertly build your custom cable assemblies for you and ship same-day.

Electrical Specifications

Description	Minimum	Typical	Maximum	Units
Frequency Range	DC		18	GHz
Passive Intermodulation using 2x20W tones			-130	dBc
Operating Voltage (AC)			335	Vrms
Test Voltage (AC)			1,000	Vrms
Inner Conductor DC Resistance			3	mOhms
Outer Conductor DC Resistance			2.5	mOhms
Insulation Resistance	5,000			MOhms

Click the following link (or enter part number in "SEARCH" on website) to obtain additional part information including price, inventory and certifications: QMA Male Connector Solder/Non-Solder Contact Attachment for PE-SR402AL, PE-SR402FL, PE-SR402FLJ, PE-SR402TN, RG402 PE44496

Pasternack Enterprises, Inc. • P.O. Box 16759, Irvine, CA 92623
Phone: (866) 727-8376 or (949) 261-1920 • **Fax:** (949) 261-7451
Sales@Pasternack.com • Techsupport@Pasternack.com

© 2016 Pasternack Enterprises All Rights Reserved

QMA Male Connector Solder/Non-Solder Contact Attachment for PE-SR402AL, PE-SR402FL, PE-SR402FLJ, PE-SR402TN, RG402

Performance by Frequency

Description	F1	F2	F3	F4	F5	Units
Frequency Range	DC to 3	3 to 6				GHz
VSWR, Max	1.06:1	1.12:1				

Electrical Specification Notes:
RF leakage: 95 dB (up to 2 GHz), 80 dB (up to 4 GHz), 70 dB (up to 6 GHz) min.
Insertion loss = 0.05 x sqrt(fGHz) dB max up to 6 GHz.

Mechanical Specifications

Size

Length	0.67 in [17.02 mm]
Width/Dia.	0.41 in [10.41 mm]
Weight	0.006 lbs [2.72 g]
Mating Cycles	100 Cycles

Material Specifications

Description	Material	Plating
Contact	Beryllium Copper	Gold over Nickel 1.27 µm minimum
Insulation	PTFE	
Outer Conductor	Spring Bronze	Tri-Metal
Body	Brass	Gold over Nickel 0.15 µm minimum

Environmental Specifications

Temperature

Operating Range	-40 to +85 deg C
Storage Range	-40 to +85 deg C
Humidity	IEC 60169-1 16.3 (96 hours)
Vibration	IEC 60068-2-64 random
Thermal Shock	IEC 60169-1 16.4 (-40/+85°C)
Salt Spray	IEC 60109-1 16.7 (48 hrs)

Click the following link (or enter part number in "SEARCH" on website) to obtain additional part information including price, inventory and certifications: QMA Male Connector Solder/Non-Solder Contact Attachment for PE-SR402AL, PE-SR402FL, PE-SR402FLJ, PE-SR402TN, RG402 PE44496

Pasternack Enterprises, Inc. • P.O. Box 16759, Irvine, CA 92623
Phone: (866) 727-8376 or (949) 261-1920 • **Fax:** (949) 261-7451
Sales@Pasternack.com • Techsupport@Pasternack.com

© 2016 Pasternack Enterprises All Rights Reserved

QMA Male Connector Solder/Non-Solder Contact Attachment for PE-SR402AL, PE-SR402FL, PE-SR402FLJ, PE-SR402TN, RG402

Compliance Certifications (see product page for current document)

Plotted and Other Data

Notes:

QMA Male Connector Solder/Non-Solder Contact Attachment for PE-SR402AL, PE-SR402FL, PE-SR402FLJ, PE-SR402TN, RG402 from Pasternack Enterprises has same day shipment for domestic and International orders. Our RF, microwave and millimeter wave products maintain a 99% availability and are part of the broadest selection in the industry.

Click the following link (or enter part number in "SEARCH" on website) to obtain additional part information including price, inventory and certifications: QMA Male Connector Solder/Non-Solder Contact Attachment for PE-SR402AL, PE-SR402FL, PE-SR402FLJ, PE-SR402TN, RG402 PE44496

URL: https://www.pasternack.com/qma-male-standard-pe-sr402al-pe-sr402fl-rg402-connector-pe44496-p.aspx

The information contained in this document is accurate to the best of our knowledge and representative of the part described herein. It may be necessary to make modifications to the part and/or the documentation of the part, in order to implement improvements. Pasternack reserves the right to make such changes as required. Unless otherwise stated, all specifications are nominal. Pasternack does not make any representation or warranty regarding the suitability of the part described herein for any particular purpose, and Pasternack does not assume any liability arising out of the use of any part or documentation.

Pasternack Enterprises, Inc. • P.O. Box 16759, Irvine, CA 92623
Phone: (866) 727-8376 or (949) 261-1920 • **Fax:** (949) 261-7451
Sales@Pasternack.com • Techsupport@Pasternack.com

© 2016 Pasternack Enterprises All Rights Reserved

PE44496 CAD Drawing

QMA Male Connector Solder/Non-Solder Contact Attachment for PE-SR402AL, PE-SR402FL, PE-SR402FLJ, PE-SR402TN, RG402

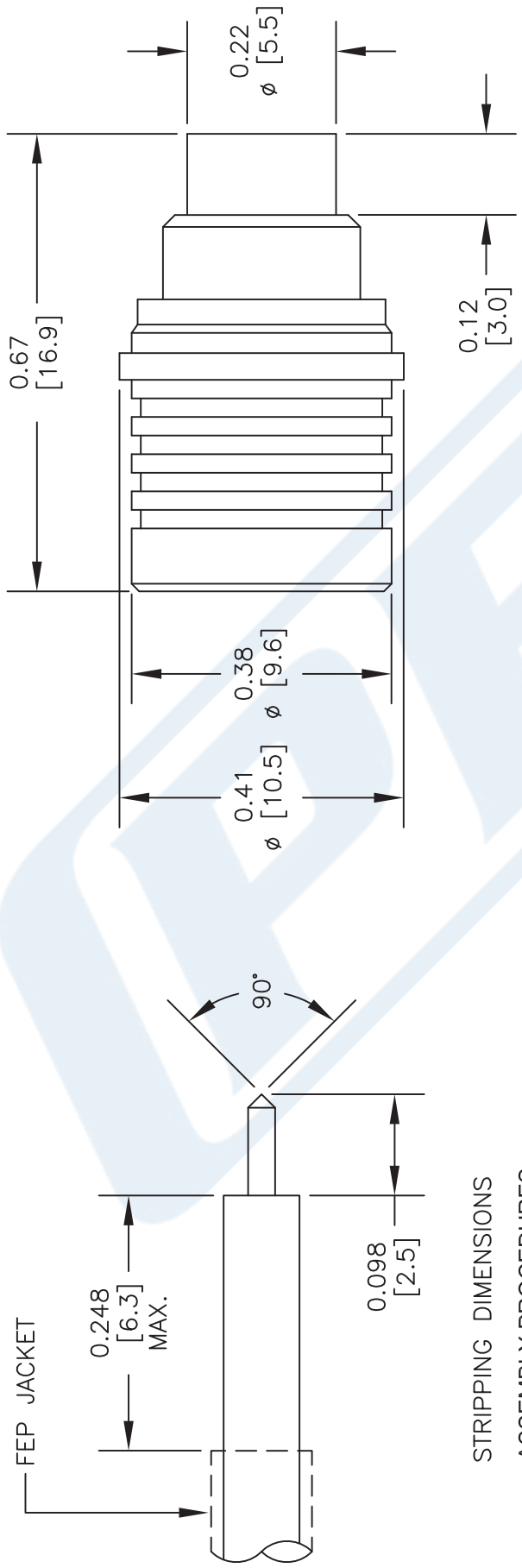

STRIPPING DIMENSIONS

ASSEMBLY PROCEDURES

1. STRIP CABLE AS SHOWN. DO NOT NICK CENTER CONDUCTOR.
2. SLIDE CABLE INTO CONNECTOR INSURING CENTER CONDUCTOR MATES WITH CENTER PIN.
3. OUTER CONDUCTOR BOTTOMS OUT WITH BODY SHOULDER. SOLDER OUTER CONDUCTOR TO BODY.

NOTES:
1. UNLESS OTHERWISE SPECIFIED ALL DIMENSIONS ARE NOMINAL.
2. ALL SPECIFICATIONS ARE SUBJECT TO CHANGE WITHOUT NOTICE AT ANY TIME.
3. DIMENSIONS ARE IN INCHES [mm].
4. FITS MIL-C-17 AND EQUIVALENT CABLES.

DWG TITLE
PE44496

CAD FILE 091715 | SCALE N/A | SIZE A | 2233

FSCM NO. 53919

PASTERNACK® THE ENGINEER'S RF SOURCE
Pasternack Enterprises, Inc.
P.O. Box 16759 | Irvine | CA | 92623
Phone: (949) 261-1920 | **Fax:** (949) 261-7451
Website: www.pasternack.com | **E-Mail:** sales@pasternack.com

© 2016 Pasternack Enterprises All Rights Reserved

PASTERNACK®
THE ENGINEER'S RF SOURCE

TNC Male Connector Clamp/Solder Attachment For PE-SR402AL, PE-SR402FL, RG402

TECHNICAL DATA SHEET PE4143

Configuration

Connector	TNC Male
Connector Interface Type	PE-SR402AL,PE-SR402FL,RG402
Cable Attachment Method (Shield/Contact)	Clamp/Solder
Body Style	Straight

Electrical Specifications

Impedance, Ohms	50

Mechanical Specifications

Size

Weight, lbs [g]	0.055 [24.95]

Connector

Type	TNC Male
Body Material and Plating	Brass, Nickel

Compliance Certifications (visit www.Pasternack.com for current document)

RoHS Compliant	Yes

Plotted and Other Data

Notes:	Values at 25 °C, sea level

TNC Male Connector Clamp/Solder Attachment For PE-SR402AL, PE-SR402FL, RG402 from Pasternack Enterprises has same day shipment for domestic and International orders. Our RF, microwave and fiber optic products maintain a 99% availability and are part of the broadest selection in the industry.

Click the following link (or enter part number in "SEARCH" on website) to obtain additional part information including price, inventory and certifications: TNC Male Connector Clamp/Solder Attachment For PE-SR402AL, PE-SR402FL, RG402 PE4143

URL: http://www.pasternack.com/tnc-male-standard-pe-sr402al-pe-sr402fl-rg402-connector-pe4143-p.aspx

The information contained in this document is accurate to the best of our knowledge and representative of the part described herein. It may be necessary to make modifications to the part and/or the documentation of the part, in order to implement improvements. Pasternack reserves the right to make such changes as required. Unless otherwise stated, all specifications are nominal.

Pasternack Enterprises, Inc. • P.O. Box 16759, Irvine, CA 92623
Phone: (866) 727-8376 or (949) 261-1920 • **Fax:** (949) 261-7451
Sales@Pasternack.com • Techsupport@Pasternack.com

© 2014 Pasternack Enterprises All Rights Reserved

PE4143 CAD Drawing

TNC Male Connector Clamp/Solder Attachment For PE-SR402AL, PE-SR402FL, RG402

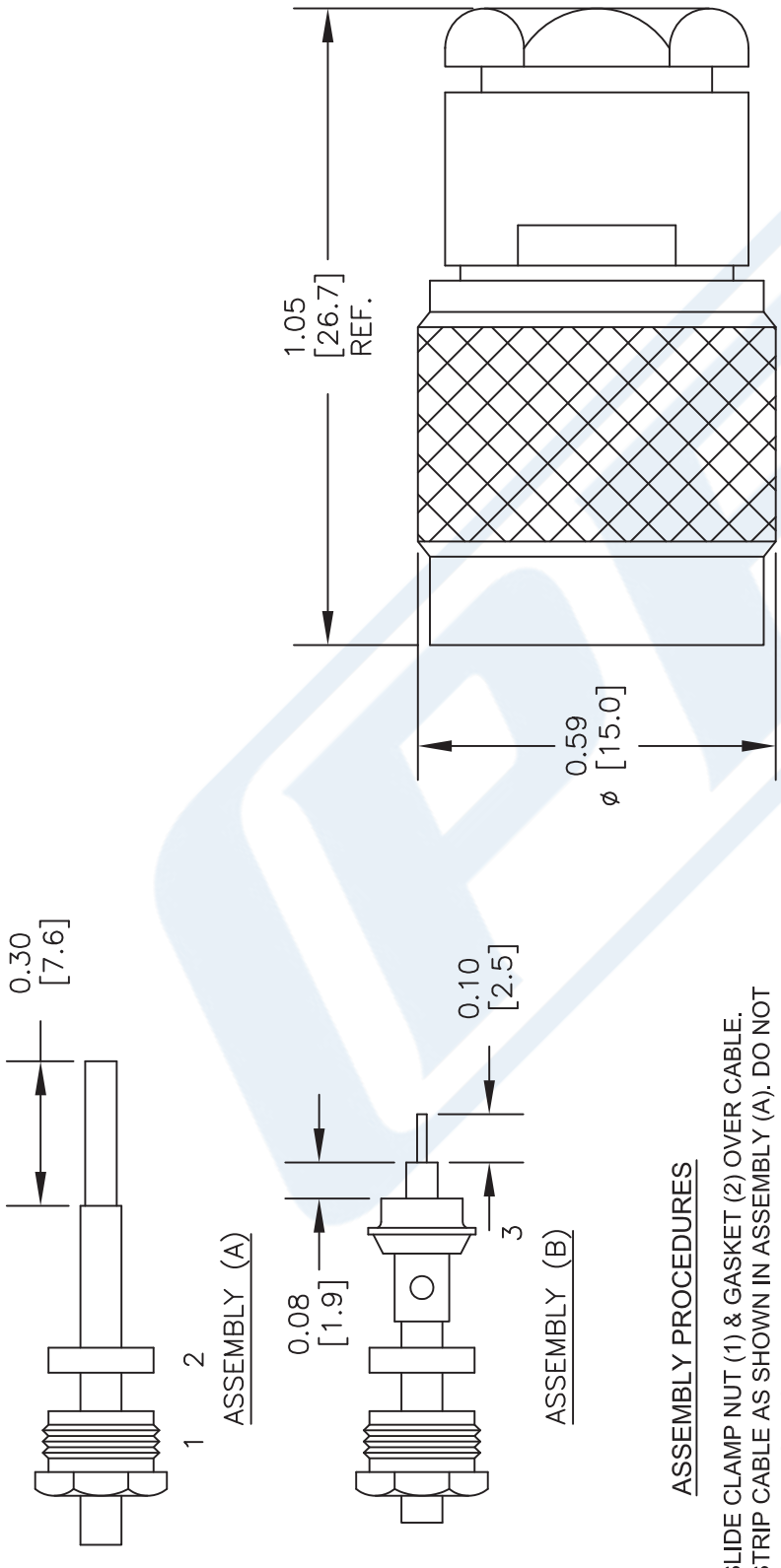

ASSEMBLY PROCEDURES

1. SLIDE CLAMP NUT (1) & GASKET (2) OVER CABLE. STRIP CABLE AS SHOWN IN ASSEMBLY (A). DO NOT CUT DIELECTRIC.
2. SLIDE ADAPTER (3) OVER CABLE UNTIL ADAPTER (3) BOTTOMS ON OUTER CONDUCTOR. SOLDER ADAPTER (3) TO OUTER CONDUCTOR USING MINIMUM HEAT.
3. STRIP CABLE AS SHOWN IN ASSEMBLY (B). SOLDER CONTACT TO CENTER CONDUCTOR. SLIDE ASSEMBLY FORWARD & TIGHTEN TO BODY.

NOTES:
1. UNLESS OTHERWISE SPECIFIED ALL DIMENSIONS ARE NOMINAL.
2. ALL SPECIFICATIONS ARE SUBJECT TO CHANGE WITHOUT NOTICE AT ANY TIME.
3. DIMENSIONS ARE IN INCHES [mm].
4. FITS MIL-C-17 AND EQUIVALENT CABLES.

DWG TITLE
PE4143

FSCM NO. 53919

CAD FILE 042309 | SCALE N/A | SIZE A | 147

PASTERNACK®
THE ENGINEER'S RF SOURCE
Pasternack Enterprises, Inc.
P.O. Box 16759 | Irvine | CA | 92623
Phone: (949) 261-1920 | **Fax:** (949) 261-7451
Website: www.pasternack.com | **E-Mail:** sales@pasternack.com

© 2014 Pasternack Enterprises All Rights Reserved

PASTERNACK®
THE ENGINEER'S RF SOURCE

Formable 141 Semi-rigid Coax Cable with Tinned Copper Braid Outer Conductor

RF Cables Technical Data Sheet PE-SR402FL

Configuration

- Formable Cable
- 1 Shield(s)

Features

- Dimensionally the same as standard solid outer conductor semi-rigid coax
- Standard semi-rigid connectors can be used
- Cable is hand formable and does not require special tools to bend
- Connectors are easily soldered to Tin soaked outer conductor
- Cable can be formed more than once without damage to outer conductor
- High RF Shielding >100 dB

Description

Formable semi-rigid coax is a hand formable version of standard semi-rigid that does not require complicated and costly pre-formed cable assemblies. Because the dimensions and electrical characteristics are so closely matched to semi-rigid coax, standard semi-rigid connectors can be used. The tin soaked copper braid outer shield provides excellent RF shielding.

Electrical Specifications

Description	Minimum	Typical	Maximum	Units
Frequency Range	DC		20	GHz
Impedance		50		Ohms
Velocity of Propagation		69.5		%
Shielding Effectiveness	110			dB
Inner Conductor DC Resistance			7.8	Ohms/1000ft
Outer Conductor DC Resistance			5.5	Ohms/1000ft
Nominal Capacitance		29 [95.14]		pF/ft [pF/m]

Performance by Frequency Band

Description	F1	F2	F3	F4	F5	Units
Frequency	0.5	1	5	10	20	GHz
Attenuation, Typ	8	12	29	45	70	dB/100ft
	26.25	39.37	95.14	147.64	229.66	dB/100m

Mechanical Specifications

Min. Bend Radius (Repeated)	0.625 in [15.88 mm]

Click the following link (or enter part number in "SEARCH" on website) to obtain additional part information including price, inventory and certifications: Formable 141 Semi-rigid Coax Cable with Tinned Copper Braid Outer Conductor PE-SR402FL

Pasternack Enterprises, Inc. • P.O. Box 16759, Irvine, CA 92623
Phone: (866) 727-8376 or (949) 261-1920 • **Fax:** (949) 261-7451
Sales@Pasternack.com • Techsupport@Pasternack.com

© 2018 Pasternack Enterprises All Rights Reserved

Formable 141 Semi-rigid Coax Cable with Tinned Copper Braid Outer Conductor

Construction Specifications

Description	Material and Plating	Diameter
Inner Conductor	Copper, Silver, 1 Strands	0.037 in [0.94 mm]
Conductor Type	Solid	
Dielectric	PTFE	0.119 in [3.02 mm]
First Shield	Tinned Copper Braid 100% coverage	0.141 in [3.58 mm]

Environmental Specifications

Temperature

Operating Range -55 to +125 deg C

Compliance Certifications (see product page for current document)

Plotted and Other Data

Notes:

Formable 141 Semi-rigid Coax Cable with Tinned Copper Braid Outer Conductor from Pasternack Enterprises has same day shipment for domestic and International orders. Our RF, microwave and millimeter wave products maintain a 99.4% availability and are part of the broadest selection in the industry.

Click the following link (or enter part number in "SEARCH" on website) to obtain additional part information including price, inventory and certifications: Formable 141 Semi-rigid Coax Cable with Tinned Copper Braid Outer Conductor PE-SR402FL

URL: https://www.pasternack.com/formable-0.141-semirigid-replacement-50-ohm-coax-cable-tinned-braid-pe-sr402fl-p.aspx

The information contained in this document is accurate to the best of our knowledge and representative of the part described herein. It may be necessary to make modifications to the part and/or the documentation of the part, in order to implement improvements. Pasternack reserves the right to make such changes as required. Unless otherwise stated, all specifications are nominal. Pasternack does not make any representation or warranty regarding the suitability of the part described herein for any particular purpose, and Pasternack does not assume any liability arising out of the use of any part or documentation.

Pasternack Enterprises, Inc. • P.O. Box 16759, Irvine, CA 92623
Phone: (866) 727-8376 or (949) 261-1920 • **Fax:** (949) 261-7451
Sales@Pasternack.com • Techsupport@Pasternack.com

© 2018 Pasternack Enterprises All Rights Reserved

PE-SR402FL CAD Drawing

Formable 141 Semi-rigid Coax Cable with Tinned Copper Braid Outer Conductor

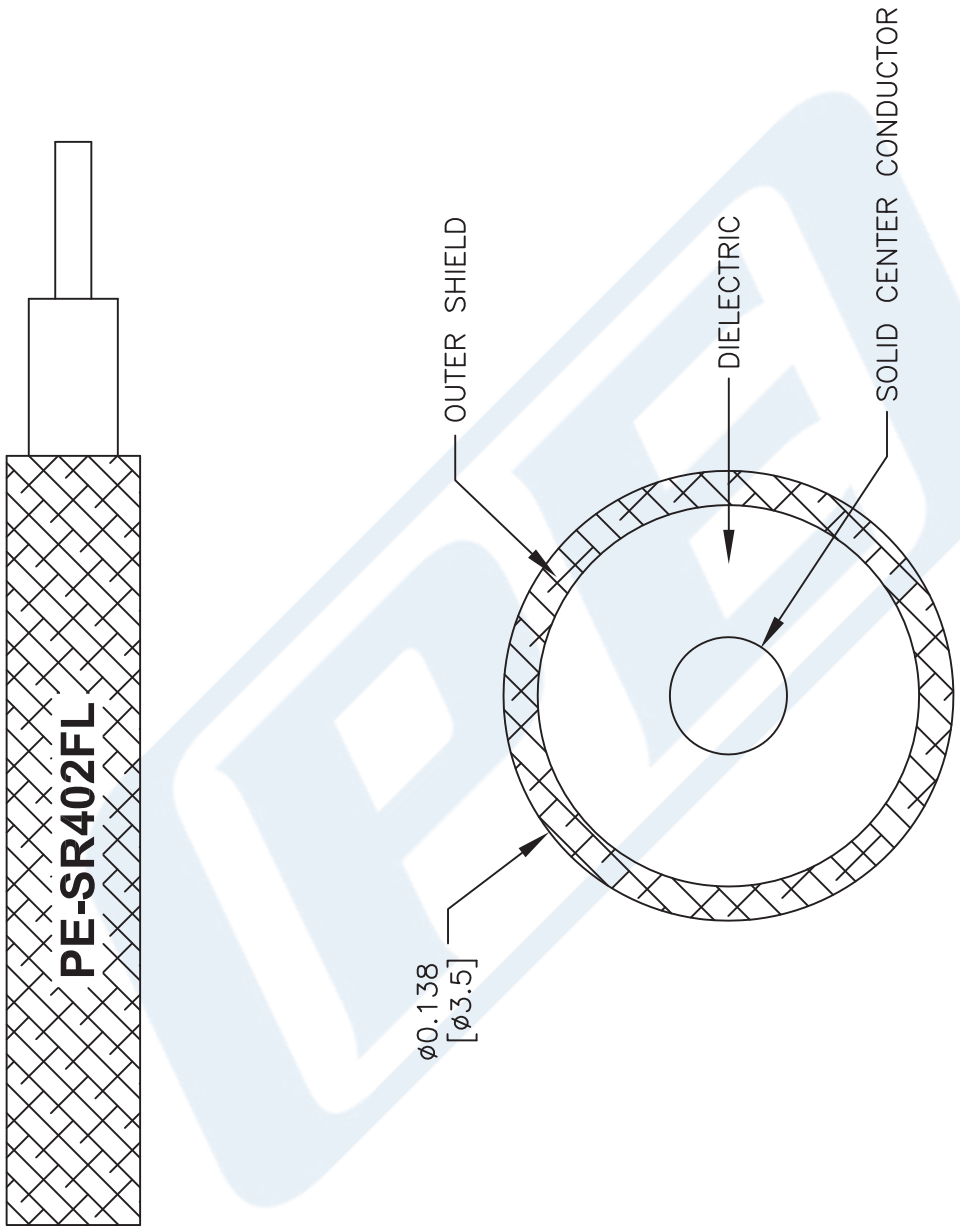

NOTES:
1. UNLESS OTHERWISE SPECIFIED ALL DIMENSIONS ARE NOMINAL.
2. ALL SPECIFICATIONS ARE SUBJECT TO CHANGE WITHOUT NOTICE AT ANY TIME.
3. DIMENSIONS ARE IN INCHES [mm].

DWG TITLE
PESR402FL

FSCM NO. 53919

CAD FILE 111716 | SCALE N/A | SIZE A | 41742

PASTERNACK®
THE ENGINEER'S RF SOURCE
Pasternack Enterprises, Inc.
P.O. Box 16759 | Irvine | CA | 92623
Phone: (949) 261-1920 | **Fax:** (949) 261-7451
Website: www.pasternack.com | **E-Mail:** sales@pasternack.com

© 2018 Pasternack Enterprises All Rights Reserved