PASTERNACK
an INFINITE brand

HN Female Connector Clamp/Solder Attachment for RG213, RG8, RG225, RG214, RG393

RF Connectors
Technical Data Sheet

PE4229

Configuration

- HN Female Connector
- MIL-STD-348A
- 50 Ohms
- Straight Body Geometry
- Connector Interface Types: RG213, RG8, RG225, RG214, RG393

Features

- Max. Operating Frequency 2 GHz
- Good VSWR of 1.3:1
- Gold Plated Brass Contact

Applications

- General Purpose Test
- Custom Cable Assemblies

Description

Pasternack's PE4229 HN female connector with clamp/solder attachment for RG213, RG8, RG225, RG214 and RG393 is part of our full line of RF components available for same-day shipping. Our HN female connector operates up to a maximum frequency of 2 GHz and offers good VSWR of 1.3:1.

Our HN female connector PE4229 datasheet specifications and drawing with dimensions are shown below in this PDF. Pasternack's broad catalog of RF, microwave and millimeter wave connectors allows designers to configure and customize their signal connections however they like. Whether the need is to provide an I/O for a board design, or simply create a custom cable assembly configuration, Pasternack has the right connector for the job. Pasternack can also expertly build your custom cable assemblies for you and ship same-day.

Electrical Specifications

Description	Minimum	Typical	Maximum	Units
Frequency Range	DC		2	GHz
VSWR			1.3:1	
Operating Voltage (AC)			1,500	Vrms

Mechanical Specifications

Size

Length	2.52 in [64.01 mm]
Width/Dia.	0.75 in [19.05 mm]
Weight	0.164 lbs [74.39 g]

Click the following link (or enter part number in "SEARCH" on website) to obtain additional part information including price, inventory and certifications: HN Female Connector Clamp/Solder Attachment for RG213, RG8, RG225, RG214, RG393 PE4229

Pasternack Enterprises, Inc. • P.O. Box 16759, Irvine, CA 92623
Phone: (866) 727-8376 or (949) 261-1920 • **Fax:** (949) 261-7451
Sales@Pasternack.com • Techsupport@Pasternack.com

© 2020 Pasternack Enterprises All Rights Reserved

HN Female Connector Clamp/Solder Attachment for RG213, RG8, RG225, RG214, RG393

Material Specifications

Description	Material	Plating
Contact	Brass	Gold
Insulation	PTFE	
Body	Brass	Nickel 100 µin minimum

Mechanical Specification Notes:
When attaching the connector to the cable use a clamp torque value of 60 to 65 in-lbs [6.78 to 7.34 Nm]

Environmental Specifications

Temperature

Operating Range -65 to +165 deg C

Compliance Certifications (see product page for current document)

Plotted and Other Data

Notes:

HN Female Connector Clamp/Solder Attachment for RG213, RG8, RG225, RG214, RG393 from Pasternack Enterprises has same day shipment for domestic and International orders. Our RF, microwave and millimeter wave products maintain a 99.4% availability and are part of the broadest selection in the industry.

Click the following link (or enter part number in “SEARCH” on website) to obtain additional part information including price, inventory and certifications: HN Female Connector Clamp/Solder Attachment for RG213, RG8, RG225, RG214, RG393 PE4229

URL: https://www.pasternack.com/hn-female-standard-rg213-rg214-rg8-rg9-rg225-rg393-connector-pe4229-p.aspx

The information contained in this document is accurate to the best of our knowledge and representative of the part described herein. It may be necessary to make modifications to the part and/or the documentation of the part, in order to implement improvements. Pasternack reserves the right to make such changes as required. Unless otherwise stated, all specifications are nominal. Pasternack does not make any representation or warranty regarding the suitability of the part described herein for any particular purpose, and Pasternack does not assume any liability arising out of the use of any part or documentation.

Pasternack Enterprises, Inc. • P.O. Box 16759, Irvine, CA 92623
Phone: (866) 727-8376 or (949) 261-1920 • **Fax:** (949) 261-7451
Sales@Pasternack.com • Techsupport@Pasternack.com

© 2020 Pasternack Enterprises All Rights Reserved

PE4229 CAD Drawing

HN Female Connector Clamp/Solder Attachment for RG213, RG8, RG225, RG214, RG393

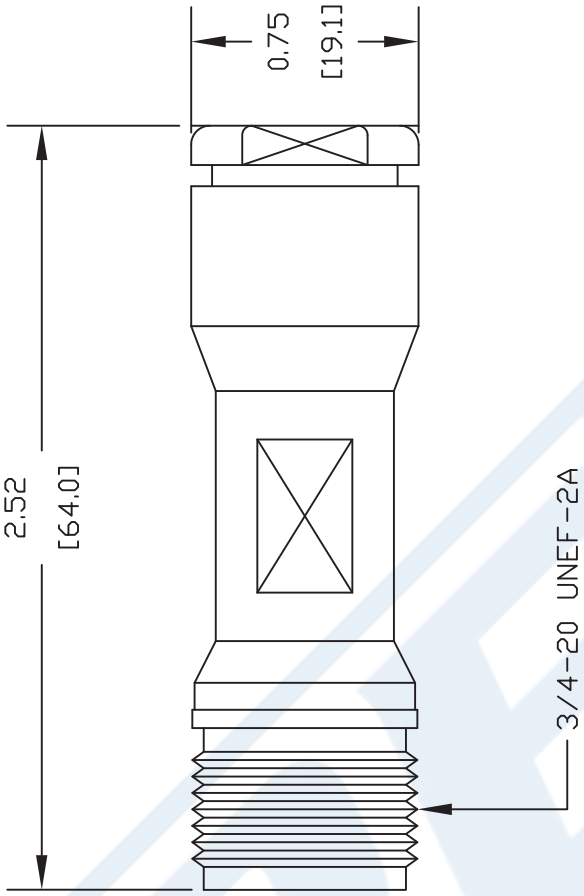

ASSEMBLY PROCEDURES

1. SLIDE CLAMP NUT (1), WASHER (2) & GASKET (3) OVER CABLE. STRIP CABLE AS SHOWN. DO NOT NICK BRAID WHILE CUTTING JACKET. TAPER END OF BRAID TO PERMIT ASSEMBLY OF BRAID CLAMP (4). SLIDE BRAID CLAMP (4) OVER BRAID & SEAT AGAINST CABLE.

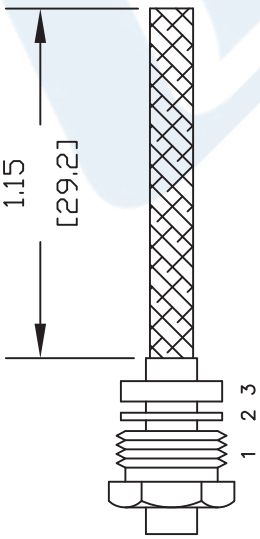

2. FORM BRAID OVER CLAMP NUT (4). TRIM BRAID BACK TO SHOULDER. CUT DIELECTRIC & CENTER CONDUCTOR TO DIMENSION SHOWN. DO NOT NICK CENTER CONDUCTOR. SOLDER CONTACT TO CENTER CONDUCTOR. REMOVE EXCESS SOLDER. DO NOT OVER HEAT DIELECTRIC. INSERT CABLE ASSEMBLY INTO BODY & TIGHTEN.

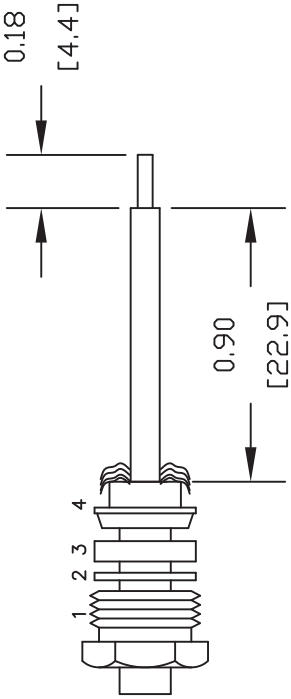

NOTES:
1. UNLESS OTHERWISE SPECIFIED ALL DIMENSIONS ARE NOMINAL.
2. ALL SPECIFICATIONS ARE SUBJECT TO CHANGE WITHOUT NOTICE AT ANY TIME.
3. DIMENSIONS ARE IN INCHES [mm].
4. FITS MIL-C-17 AND EQUIVALENT CABLES.

DWG TITLE **PE4229**

REV. - | FSCM NO. 53919 | CAD FILE 042309 | SCALE N/A | SIZE A | 147

PASTERNACK®
Pasternack Enterprises, Inc.
P.O. Box 16759 | Irvine | CA | 92623
Phone: (949) 261-1920 | **Fax:** (949) 261-7451
Website: www.pasternack.com | **E-Mail:** sales@pasternack.com

© 2020 Pasternack Enterprises All Rights Reserved

PASTERNACK
an INFINITE brand

N Male Connector Crimp/Solder Attachment for RG214, RG9, RG225, RG393

RF Connectors
Technical Data Sheet

PE4048

Configuration

- N Male Connector
- MIL-STD-348A
- 50 Ohms
- Straight Body Geometry
- Connector Interface Types: RG214, RG9, RG225, RG393

Features

- Max. Operating Frequency 11 GHz
- Good VSWR of 1.5:1
- Gold Plated Brass Contact
- 30 µin minimum contact plating

Applications

- General Purpose Test
- Custom Cable Assemblies

Description

Pasternack's PE4048 type N male connector with crimp/solder attachment for RG214, RG9, RG225 and RG393 is part of our full line of RF components available for same-day shipping. Our type N male connector operates up to a maximum frequency of 11 GHz and offers good VSWR of 1.5:1.

Our type N male connector PE4048 datasheet specifications and drawing with dimensions are shown below in this PDF. Pasternack's broad catalog of RF, microwave and millimeter wave connectors allows designers to configure and customize their signal connections however they like. Whether the need is to provide an I/O for a board design, or simply create a custom cable assembly configuration, Pasternack has the right connector for the job. Pasternack can also expertly build your custom cable assemblies for you and ship same-day.

Electrical Specifications

Description	Minimum	Typical	Maximum	Units
Frequency Range	DC		11	GHz
VSWR			1.5:1	
Operating Voltage (AC)			1,000	Vrms

Mechanical Specifications

Size

Length	1.583 in [40.21 mm]
Width/Dia.	0.79 in [20.07 mm]
Weight	0.072 lbs [32.66 g]

Click the following link (or enter part number in "SEARCH" on website) to obtain additional part information including price, inventory and certifications: N Male Connector Crimp/Solder Attachment for RG214, RG9, RG225, RG393 PE4048

Pasternack Enterprises, Inc. • P.O. Box 16759, Irvine, CA 92623
Phone: (866) 727-8376 or (949) 261-1920 • **Fax:** (949) 261-7451
Sales@Pasternack.com • Techsupport@Pasternack.com

© 2020 Pasternack Enterprises All Rights Reserved

N Male Connector Crimp/Solder Attachment for RG214, RG9, RG225, RG393

RF Connectors
Technical Data Sheet

PE4048

Material Specifications

Description	Material	Plating
Contact	Brass	Gold 30 µin minimum
Insulation	PTFE	
Body	Brass	Nickel 100 µin minimum
Coupling Nut	Brass	Nickel 100 µin minimum
Crimp Sleeve	Brass	Nickel

Environmental Specifications

Temperature

Operating Range -65 to +165 deg C

Compliance Certifications (see product page for current document)

Plotted and Other Data

Notes:

N Male Connector Crimp/Solder Attachment for RG214, RG9, RG225, RG393 from Pasternack Enterprises has same day shipment for domestic and International orders. Our RF, microwave and millimeter wave products maintain a 99.4% availability and are part of the broadest selection in the industry.

Click the following link (or enter part number in “SEARCH” on website) to obtain additional part information including price, inventory and certifications: N Male Connector Crimp/Solder Attachment for RG214, RG9, RG225, RG393 PE4048

URL: https://www.pasternack.com/n-male-standard-rg214-rg9-rg225-rg393-connector-pe4048-p.aspx

The information contained in this document is accurate to the best of our knowledge and representative of the part described herein. It may be necessary to make modifications to the part and/or the documentation of the part, in order to implement improvements. Pasternack reserves the right to make such changes as required. Unless otherwise stated, all specifications are nominal. Pasternack does not make any representation or warranty regarding the suitability of the part described herein for any particular purpose, and Pasternack does not assume any liability arising out of the use of any part or documentation.

Pasternack Enterprises, Inc. • P.O. Box 16759, Irvine, CA 92623
Phone: (866) 727-8376 or (949) 261-1920 • **Fax:** (949) 261-7451
Sales@Pasternack.com • Techsupport@Pasternack.com

© 2020 Pasternack Enterprises All Rights Reserved

PE4048 CAD Drawing

N Male Connector Crimp/Solder Attachment for RG214, RG9, RG225, RG393

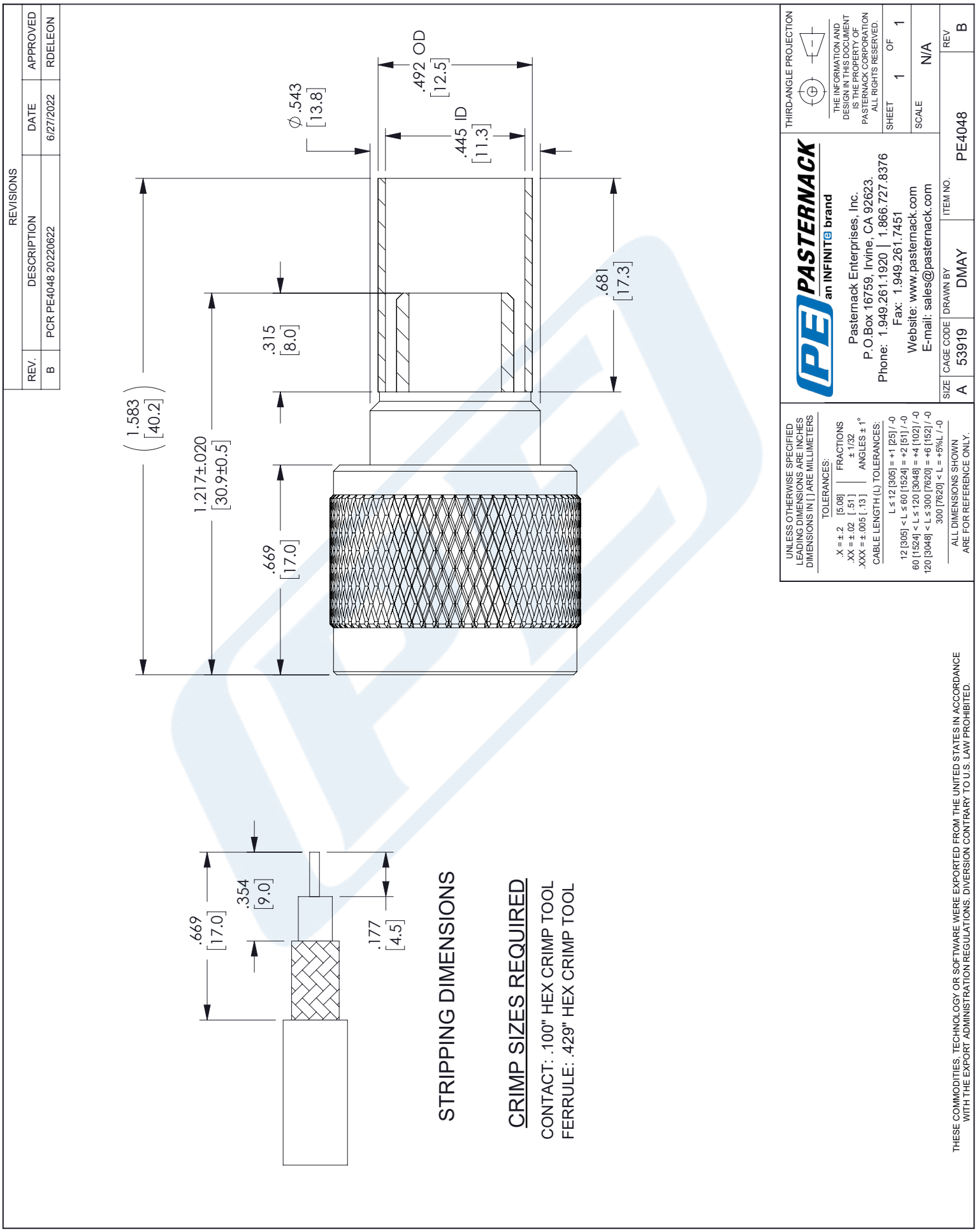

© 2020 Pasternack Enterprises All Rights Reserved

PASTERNACK®
THE ENGINEER'S RF SOURCE

Flexible RG214 Coax Cable Double Shielded with Black PVC Jacket

RF Cables
Technical Data Sheet

RG214/U

Configuration

- Flexible Cable
- 2 Shield(s)

Electrical Specifications

Description	Minimum	Typical	Maximum	Units
Frequency Range	DC		11	GHz
Impedance		50		Ohms
Velocity of Propagation		66		%
Operating Voltage (AC)			5,000	Vrms
Nominal Capacitance		30.8 [101.05]		pF/ft [pF/m]

Performance by Frequency Band

Description	F1	F2	F3	F4	F5	Units
Frequency	0.01	0.1	1	5	10	GHz
Attenuation, Typ	0.64	2.07	7.68	20.68	36.51	dB/100ft
	2.1	6.79	25.2	67.85	119.78	dB/100m

Mechanical Specifications

Diameter	0.425 in [10.8 mm]
Weight	0.122 lbs/ft [0.18 Kg/m]
Min. Bend Radius (Repeated)	1.6 in [40.64 mm]

Construction Specifications

Description	Material and Plating	Diameter
Inner Conductor	Copper, Silver, 7 Strands (7 X 0.02961)	0.089 in [2.26 mm]
Conductor Type	Stranded	
Dielectric	PE	0.285 in [7.24 mm]
First Shield	Silver Plated Copper Braid	

Click the following link (or enter part number in "SEARCH" on website) to obtain additional part information including price, inventory and certifications: Flexible RG214 Coax Cable Double Shielded with Black PVC Jacket RG214/U

Pasternack Enterprises, Inc. • P.O. Box 16759, Irvine, CA 92623
Phone: (866) 727-8376 or (949) 261-1920 • **Fax:** (949) 261-7451
Sales@Pasternack.com • Techsupport@Pasternack.com

© 2018 Pasternack Enterprises All Rights Reserved

Flexible RG214 Coax Cable Double Shielded with Black PVC Jacket

	90% coverage	
Second Shield	Silver Plated Copper Braid 90% coverage	0.331 in [8.41 mm]
Jacket	PVC, Black	0.425 in [10.8 mm]

Environmental Specifications

Temperature

Operating Range -20 to +80 deg C

Compliance Certifications (see product page for current document)

Plotted and Other Data

Notes:

Flexible RG214 Coax Cable Double Shielded with Black PVC Jacket from Pasternack Enterprises has same day shipment for domestic and International orders. Our RF, microwave and millimeter wave products maintain a 99.4% availability and are part of the broadest selection in the industry.

Click the following link (or enter part number in "SEARCH" on website) to obtain additional part information including price, inventory and certifications: Flexible RG214 Coax Cable Double Shielded with Black PVC Jacket RG214/U

URL: https://www.pasternack.com/flexible-0.425-rg214-50-ohm-coax-cable-pvc-jacket-rg214-u-p.aspx

The information contained in this document is accurate to the best of our knowledge and representative of the part described herein. It may be necessary to make modifications to the part and/or the documentation of the part, in order to implement improvements. Pasternack reserves the right to make such changes as required. Unless otherwise stated, all specifications are nominal. Pasternack does not make any representation or warranty regarding the suitability of the part described herein for any particular purpose, and Pasternack does not assume any liability arising out of the use of any part or documentation.

Pasternack Enterprises, Inc. • P.O. Box 16759, Irvine, CA 92623
Phone: (866) 727-8376 or (949) 261-1920 • **Fax:** (949) 261-7451
Sales@Pasternack.com • Techsupport@Pasternack.com

© 2018 Pasternack Enterprises All Rights Reserved

RG214/U CAD Drawing

Flexible RG214 Coax Cable Double Shielded with Black PVC Jacket

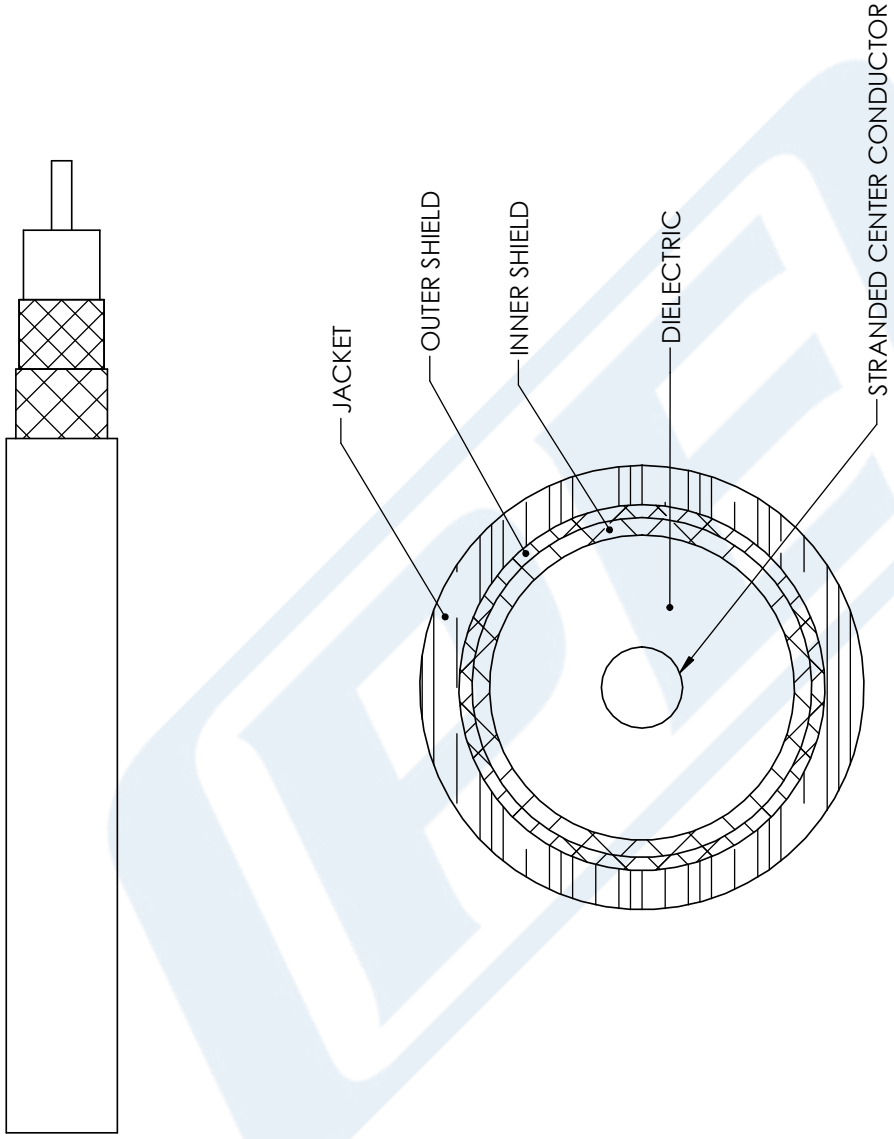

STANDARD TOLERANCES	
.X	±0.2
.XX	±0.01
.XXX	±0.005

*STANDARD TOLERANCES APPLY ONLY TO DIMENSIONS IN INCHES

NOTES:
1. UNLESS OTHERWISE SPECIFIED ALL DIMENSIONS ARE NOMINAL.
2. ALL SPECIFICATIONS ARE SUBJECT TO CHANGE WITHOUT NOTICE AT ANY TIME
3. DIMENSIONS ARE IN INCHES [mm].

DWG TITLE: RG214-U

CAD FILE: 11/29/17

SCALE: N/A

SIZE: A

CN2245

CAGE CODE 53919

PASTERNACK®
THE ENGINEER'S RF SOURCE
Pasternack Enterprises, Inc.
P.O. Box 16759 | Irvine | CA | 92623
Phone: (949) 261-1920 | **Fax:** (949) 261-7451
Website: www.pasternack.com | **E-Mail:** sales@pasternack.com

© 2018 Pasternack Enterprises All Rights Reserved