SSMA Male Right Angle Connector Crimp/Solder Attachment for RG174, RG316, RG188, PE-B100, PE-C100, 0.100 inch, LMR-100

RF Connectors Technical Data Sheet PE44378

Configuration

- SSMA Male Connector
- MIL-STD-348
- 50 Ohms
- Right Angle Body Geometry
- RG174, RG316, RG188, PE-B100, PE-C100, 0.100 inch, LMR-100 Interface Type
- Crimp/Solder Attachment
- 1/4 inch Hex

Features

- Gold Plated Contact
- Contact plating according to MIL-G-45204

Applications

- General Purpose Test
- Custom Cable Assemblies

Description

Pasternack's PE44378 SSMA male right angle connector with crimp/solder attachment for RG174, RG316, RG188, PE-B100, PE-C100, 0.100 inch and LMR-100 is part of our full line of RF components available for same-day shipping. Its right angle body geometry allows for easier connections in tight spaces.

Our SSMA male right angle connector PE44378 datasheet specifications and drawing with dimensions are shown below in this PDF. Pasternack's broad catalog of RF, microwave and millimeter wave connectors allows designers to configure and customize their signal connections however they like. Whether the need is to provide an I/O for a board design, or simply create a custom cable assembly configuration, Pasternack has the right connector for the job. Pasternack can also expertly build your custom cable assemblies for you and ship same-day.

Mechanical Specifications

Size	
Length	0.57 in [14.48 mm]
Width/Dia.	0.25 in [6.35 mm]
Height	0.675 in [17.15 mm]
Weight	0.008 lbs [3.63 g]
Mating Torque	3 to 5 in-lbs [0.34 to 0.57 Nm]

Click the following link (or enter part number in "SEARCH" on website) to obtain additional part information including price, inventory and certifications: SSMA Male Right Angle Connector Crimp/Solder Attachment for RG174, RG316, RG188, PE-B100, PE-C100, 0.100 inch, LMR-100 PE44378

Pasternack Enterprises, Inc. • P.O. Box 16759, Irvine, CA 92623
Phone: (866) 727-8376 or (949) 261-1920 • **Fax:** (949) 261-7451
Sales@Pasternack.com • Techsupport@Pasternack.com

© 2016 Pasternack Enterprises All Rights Reserved

SSMA Male Right Angle Connector Crimp/Solder Attachment for RG174, RG316, RG188, PE-B100, PE-C100, 0.100 inch, LMR-100

Material Specifications

Description	Material	Plating
Contact		Gold MIL-G-45204
Insulation	PTFE	
Body	Brass	Nickel QQ-N-290
Coupling Nut	Brass	Nickel QQ-N-290

Compliance Certifications (see product page for current document)

Plotted and Other Data

Notes:

SSMA Male Right Angle Connector Crimp/Solder Attachment for RG174, RG316, RG188, PE-B100, PE-C100, 0.100 inch, LMR-100 from Pasternack Enterprises has same day shipment for domestic and International orders. Our RF, microwave and millimeter wave products maintain a 99% availability and are part of the broadest selection in the industry.

Click the following link (or enter part number in "SEARCH" on website) to obtain additional part information including price, inventory and certifications: SSMA Male Right Angle Connector Crimp/Solder Attachment for RG174, RG316, RG188, PE-B100, PE-C100, 0.100 inch, LMR-100 PE44378

URL: https://www.pasternack.com/ssma-male-standard-rg174-rg316-rg188-connector-pe44378-p.aspx

The information contained in this document is accurate to the best of our knowledge and representative of the part described herein. It may be necessary to make modifications to the part and/or the documentation of the part, in order to implement improvements. Pasternack reserves the right to make such changes as required. Unless otherwise stated, all specifications are nominal. Pasternack does not make any representation or warranty regarding the suitability of the part described herein for any particular purpose, and Pasternack does not assume any liability arising out of the use of any part or documentation.

Pasternack Enterprises, Inc. • P.O. Box 16759, Irvine, CA 92623
Phone: (866) 727-8376 or (949) 261-1920 • **Fax:** (949) 261-7451
Sales@Pasternack.com • Techsupport@Pasternack.com

© 2016 Pasternack Enterprises All Rights Reserved

PE44378 CAD Drawing

SSMA Male Right Angle Connector Crimp/Solder Attachment for RG174, RG316, RG188, PE-B100, PE-C100, 0.100 inch, LMR-100

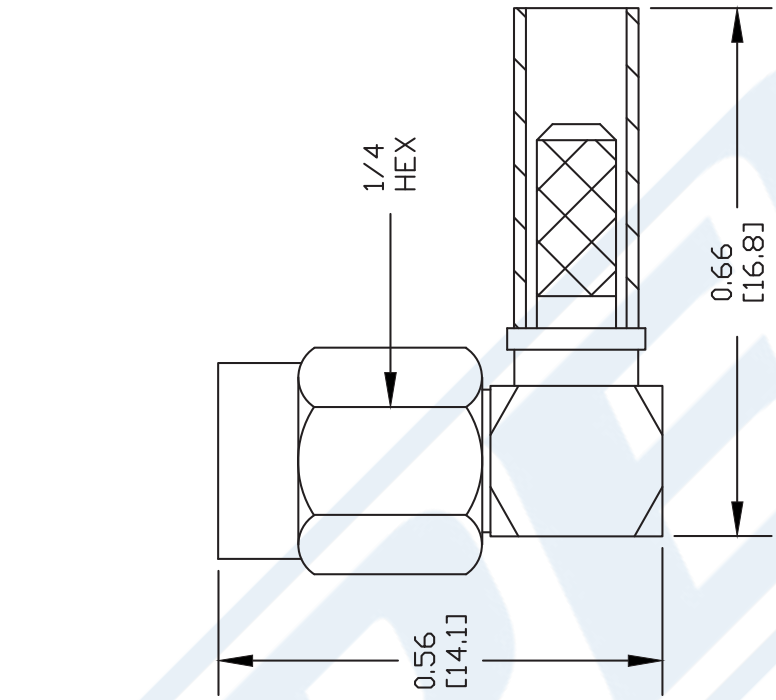

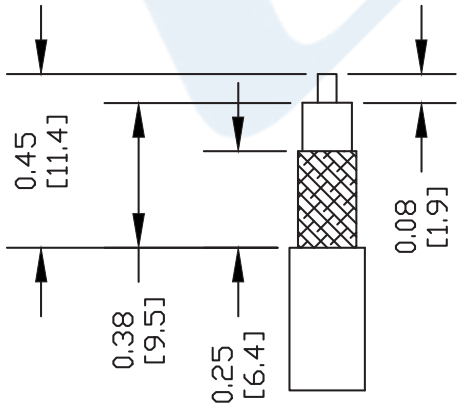

STRIPPING DIMENSIONS

ASSEMBLY PROCEDURES

1. STRIP CABLE AS SHOWN & SLIDE FERRULE OVER CABLE.
2. INSTALL CABLE INTO BODY OF CONNECTOR AND SOFT SOLDER CENTER CONDUCTOR IN PLACE.
3. CRIMP FERRULE & PRESS

CRIMP SIZE REQUIRED

FERRULE: .128" HEX CRIMP TOOL

NOTES:
1. UNLESS OTHERWISE SPECIFIED ALL DIMENSIONS ARE NOMINAL.
2. ALL SPECIFICATIONS ARE SUBJECT TO CHANGE WITHOUT NOTICE AT ANY TIME.
3. DIMENSIONS ARE IN INCHES [mm].
4. FITS MIL-C-17 AND EQUIVALENT CABLES.

DWG TITLE PE44378

REV. - | FSCM NO. 53919 | CAD FILE 080103 | SCALE N/A | SIZE A | 147

PASTERNACK®
Pasternack Enterprises, Inc.
P.O. Box 16759 | Irvine | CA | 92623
Phone: (949) 261-1920 | **Fax:** (949) 261-7451
Website: www.pasternack.com | **E-Mail:** sales@pasternack.com

© 2016 Pasternack Enterprises All Rights Reserved

PASTERNACK®
THE ENGINEER'S RF SOURCE

MMCX Plug Connector Crimp/Solder Attachment for RG174, RG316, RG188, LMR-100, PE-B100, PE-C100, 0.100 inch

Configuration

- MMCX Plug Connector
- BS EN 122340
- 50 Ohms
- Straight Body Geometry
- RG174, RG316, RG188, LMR-100, PE-B100, PE-C100, 0.100 inch Interface Type
- Crimp/Solder Attachment

Features

- Max. Operating Frequency 6 GHz
- Excellent VSWR of 1.22:1
- Gold Plated Brass Contact
- 30 µin minimum contact plating

Applications

- General Purpose Test
- Custom Cable Assemblies

Description

Pasternack's PE4896 MMCX plug connector with crimp/solder attachment for RG174, RG316, RG188, LMR-100, PE-B100, PE-C100 and 0.100 inch is part of our full line of RF components available for same-day shipping. Our MMCX plug connector operates up to a maximum frequency of 6 GHz and offers excellent VSWR of 1.22:1.

Our MMCX plug connector PE4896 datasheet specifications and drawing with dimensions are shown below in this PDF. Pasternack's broad catalog of RF, microwave and millimeter wave connectors allows designers to configure and customize their signal connections however they like. Whether the need is to provide an I/O for a board design, or simply create a custom cable assembly configuration, Pasternack has the right connector for the job. Pasternack can also expertly build your custom cable assemblies for you and ship same-day.

Electrical Specifications

Description	Minimum	Typical	Maximum	Units
Frequency Range	DC		6	GHz
VSWR			1.22:1	
Operating Voltage (AC)			250	Vrms

Mechanical Specifications

Size

Length	0.575 in [14.61 mm]
Width/Dia.	0.177 in [4.50 mm]
Weight	0.007 lbs [3.18 g]

Click the following link (or enter part number in "SEARCH" on website) to obtain additional part information including price, inventory and certifications: MMCX Plug Connector Crimp/Solder Attachment for RG174, RG316, RG188, LMR-100, PE-B100, PE-C100, 0.100 inch PE4896

Pasternack Enterprises, Inc. • P.O. Box 16759, Irvine, CA 92623
Phone: (866) 727-8376 or (949) 261-1920 • **Fax:** (949) 261-7451
Sales@Pasternack.com • Techsupport@Pasternack.com

© 2016 Pasternack Enterprises All Rights Reserved

MMCX Plug Connector Crimp/Solder Attachment for RG174, RG316, RG188, LMR-100, PE-B100, PE-C100, 0.100 inch

Material Specifications

Description	Material	Plating
Contact	Brass	Gold 30 µin minimum
Insulation	PTFE	
Body	Brass	Gold 3 µin minimum

Environmental Specifications

Temperature

Operating Range -55 to +155 deg C

Compliance Certifications (see product page for current document)

Plotted and Other Data

Notes:

MMCX Plug Connector Crimp/Solder Attachment for RG174, RG316, RG188, LMR-100, PE-B100, PE-C100, 0.100 inch from Pasternack Enterprises has same day shipment for domestic and International orders. Our RF, microwave and millimeter wave products maintain a 99% availability and are part of the broadest selection in the industry.

Click the following link (or enter part number in "SEARCH" on website) to obtain additional part information including price, inventory and certifications: MMCX Plug Connector Crimp/Solder Attachment for RG174, RG316, RG188, LMR-100, PE-B100, PE-C100, 0.100 inch PE4896

URL: https://www.pasternack.com/mmcx-plug-rg174-rg316-rg188-lmr-100-pe-b100-pe-c100-0.100-connector-pe4896-p.aspx

The information contained in this document is accurate to the best of our knowledge and representative of the part described herein. It may be necessary to make modifications to the part and/or the documentation of the part, in order to implement improvements. Pasternack reserves the right to make such changes as required. Unless otherwise stated, all specifications are nominal. Pasternack does not make any representation or warranty regarding the suitability of the part described herein for any particular purpose, and Pasternack does not assume any liability arising out of the use of any part or documentation.

Pasternack Enterprises, Inc. • P.O. Box 16759, Irvine, CA 92623
Phone: (866) 727-8376 or (949) 261-1920 • **Fax:** (949) 261-7451
Sales@Pasternack.com • Techsupport@Pasternack.com

© 2016 Pasternack Enterprises All Rights Reserved

PE4896 CAD Drawing

MMCX Plug Connector Crimp/Solder Attachment for RG174, RG316, RG188, LMR-100, PE-B100, PE-C100, 0.100 inch

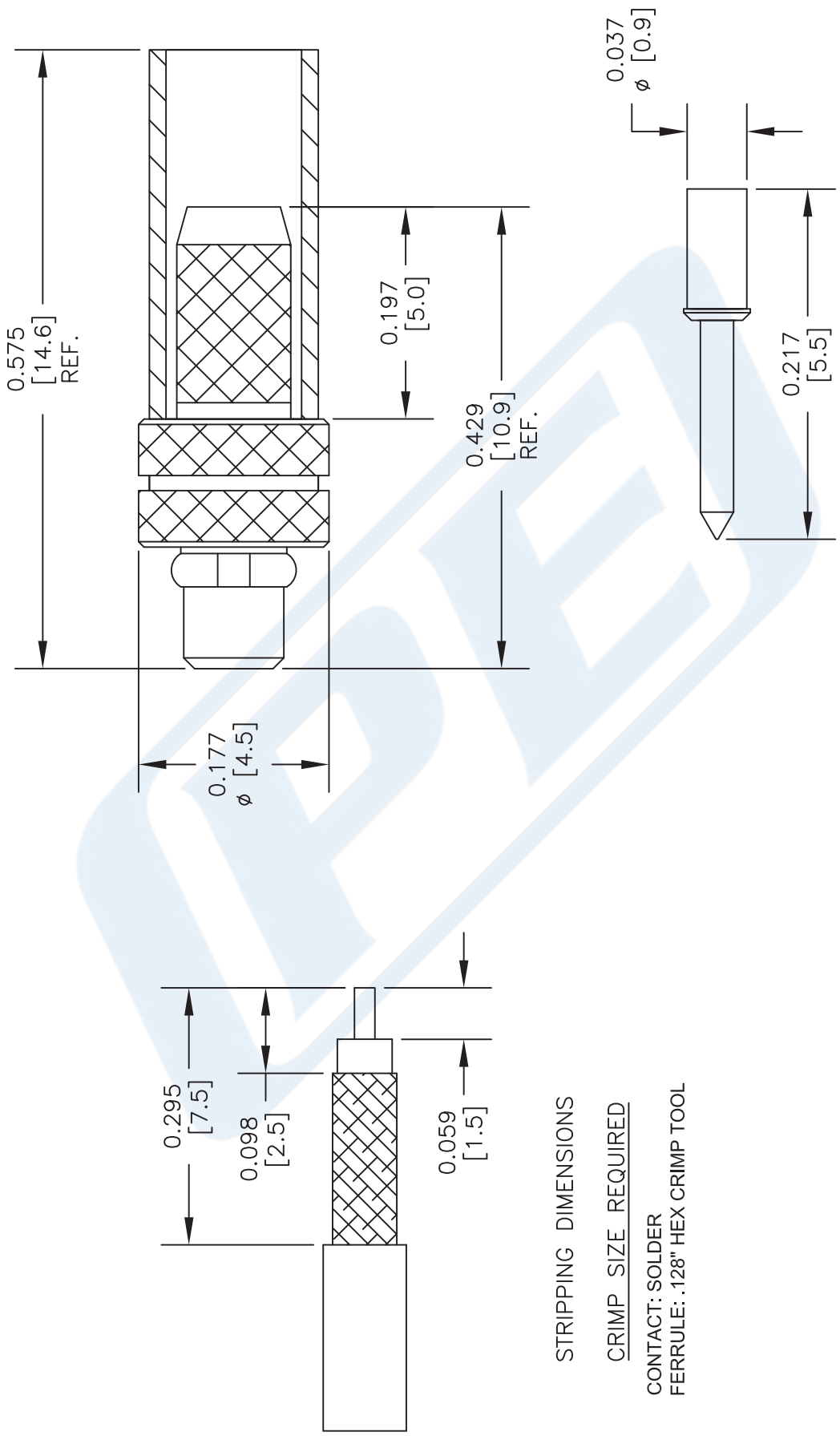

NOTES:
1. UNLESS OTHERWISE SPECIFIED ALL DIMENSIONS ARE NOMINAL.
2. ALL SPECIFICATIONS ARE SUBJECT TO CHANGE WITHOUT NOTICE AT ANY TIME.
3. DIMENSIONS ARE IN INCHES [mm].
4. FITS MIL-C-17 AND EQUIVALENT CABLES.

DWG TITLE
PE4896

FSCM NO. 53919

CAD FILE 093015 | SCALE N/A | SIZE A | 2233

PASTERNACK®
THE ENGINEER'S RF SOURCE
Pasternack Enterprises, Inc.
P.O. Box 16759 | Irvine | CA | 92623
Phone: (949) 261-1920 | **Fax:** (949) 261-7451
Website: www.pasternack.com | **E-Mail:** sales@pasternack.com

© 2016 Pasternack Enterprises All Rights Reserved

Flexible RG316 Coax Cable Single Shielded with Tan FEP Jacket

Configuration

- Flexible Cable
- 1 Shield(s)

Features

- High Flexibility
- FEP Jacket
- Velocity of Propagation 69%

Applications

- General Purpose
- Antenna Feeds
- Communication Systems
- Wireless Systems
- Indoor / Outdoor Uses
- High Temperature Applications
- High Flexibility Applications
- Jumper Cable Assemblies

Description

Flexible coaxial cable are ideal for applications where tight bends and continual flexure are required. Pasternack's RG316/U is a single shielded flexible coax cable with FEP jacket and compatible with a wide selection of connector types. This RG316/U coaxial cable has a stranded inner conductor for better flexibility and operates up to 3 GHz. The FEP jacket of this RG316/U coax cable makes it suitable for indoor/outdoor uses and high temperature applications. RG316/U datasheet specifications and outline drawing for this flexible cable are shown in the PDF below.

Pasternack carries a wide range of cables ready to ship same day to fit your needs. They are available in corrugated, flexible, formable or semi-rigid versions with different constructions of conductor materials, dielectric materials, shielding configurations and jacket materials. Our cables are designed to fit a wide range of performance criteria including attenuation, operating temperature, environmental factor, and power capability.

Electrical Specifications

Description	Minimum	Typical	Maximum	Units
Frequency Range	DC		3	GHz
Impedance		50		Ohms
Velocity of Propagation		69		%
Operating Voltage (AC)			900	Vrms
Dielectric Withstanding Voltage (AC)			2,000	Vrms
Jacket Spark			2,000	Vrms
Nominal Capacitance		29.4 [96.46]		pF/ft [pF/m]

Click the following link (or enter part number in "SEARCH" on website) to obtain additional part information including price, inventory and certifications: Flexible RG316 Coax Cable Single Shielded with Tan FEP Jacket RG316/U

Pasternack Enterprises, Inc. • P.O. Box 16759, Irvine, CA 92623
Phone: (866) 727-8376 or (949) 261-1920 • **Fax:** (949) 261-7451
Sales@Pasternack.com • Techsupport@Pasternack.com

© 2018 Pasternack Enterprises All Rights Reserved

Flexible RG316 Coax Cable Single Shielded with Tan FEP Jacket

Performance by Frequency Band

Description	F1	F2	F3	F4	F5	Units
Frequency	0.05	0.1	0.4	1	3	GHz
Attenuation, Typ	7.5	11	21	38	58	dB/100ft
	24.61	36.09	68.9	124.67	190.29	dB/100m

Mechanical Specifications

Diameter	0.102 in [2.59 mm]
Weight	0.01 lbs/ft [0.01 Kg/m]

Construction Specifications

Description	Material and Plating	Diameter
Inner Conductor	Copper Clad Steel, Silver, 7 Strands	0.02 in [0.51 mm]
Conductor Type	Stranded	
Dielectric	PTFE	0.06 in [1.52 mm]
First Shield	Silver Plated Copper Braid 95% coverage	
Jacket	FEP, Tan	0.102 in [2.59 mm]

Environmental Specifications

Temperature

Operating Range	-55 to +200 deg C

Click the following link (or enter part number in "SEARCH" on website) to obtain additional part information including price, inventory and certifications: Flexible RG316 Coax Cable Single Shielded with Tan FEP Jacket RG316/U

Pasternack Enterprises, Inc. • P.O. Box 16759, Irvine, CA 92623
Phone: (866) 727-8376 or (949) 261-1920 • **Fax:** (949) 261-7451
Sales@Pasternack.com • Techsupport@Pasternack.com

© 2018 Pasternack Enterprises All Rights Reserved

Flexible RG316 Coax Cable Single Shielded with Tan FEP Jacket

Compliance Certifications (see product page for current document)

Plotted and Other Data

Notes:

Flexible RG316 Coax Cable Single Shielded with Tan FEP Jacket from Pasternack Enterprises has same day shipment for domestic and International orders. Our RF, microwave and millimeter wave products maintain a 99.4% availability and are part of the broadest selection in the industry.

Click the following link (or enter part number in "SEARCH" on website) to obtain additional part information including price, inventory and certifications: Flexible RG316 Coax Cable Single Shielded with Tan FEP Jacket RG316/U

URL: https://www.pasternack.com/50-ohm-flexible-rg316u-fep-jacket-silver-plated-copper-braid-outer-conductor-single-shielded-tan-rg316-u-p.aspx

The information contained in this document is accurate to the best of our knowledge and representative of the part described herein. It may be necessary to make modifications to the part and/or the documentation of the part, in order to implement improvements. Pasternack reserves the right to make such changes as required. Unless otherwise stated, all specifications are nominal. Pasternack does not make any representation or warranty regarding the suitability of the part described herein for any particular purpose, and Pasternack does not assume any liability arising out of the use of any part or documentation.

Pasternack Enterprises, Inc. • P.O. Box 16759, Irvine, CA 92623
Phone: (866) 727-8376 or (949) 261-1920 • **Fax:** (949) 261-7451
Sales@Pasternack.com • Techsupport@Pasternack.com

© 2018 Pasternack Enterprises All Rights Reserved

RG316/U CAD Drawing

Flexible RG316 Coax Cable Single Shielded with Tan FEP Jacket

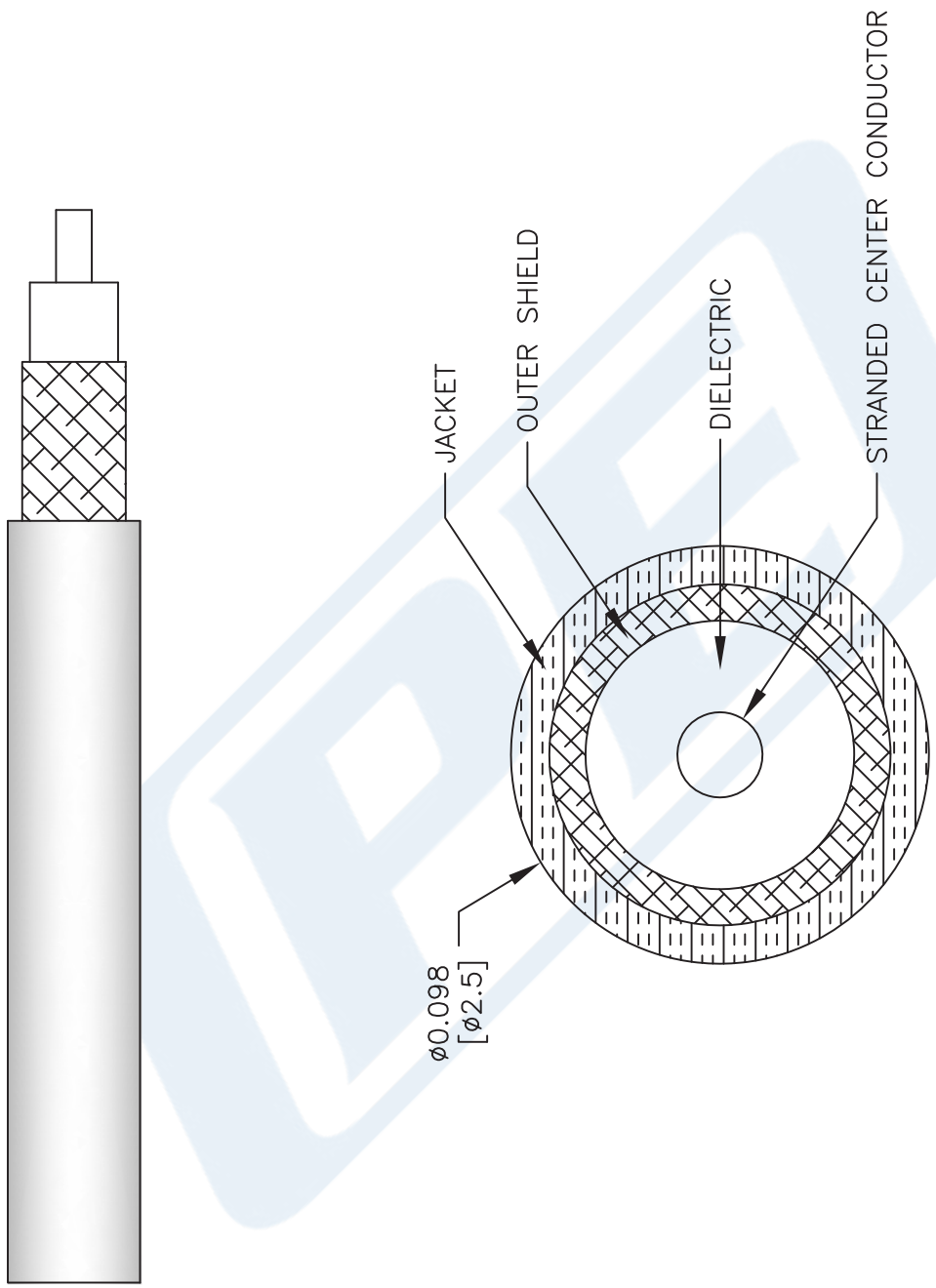

NOTES:
1. UNLESS OTHERWISE SPECIFIED ALL DIMENSIONS ARE NOMINAL.
2. ALL SPECIFICATIONS ARE SUBJECT TO CHANGE WITHOUT NOTICE AT ANY TIME.
3. DIMENSIONS ARE IN INCHES [mm].

DWG TITLE
RG316/U

FSCM NO. 53919

CAD FILE 111716 | SCALE N/A | SIZE A | 41742

PASTERNACK® THE ENGINEER'S RF SOURCE
Pasternack Enterprises, Inc.
P.O. Box 16759 | Irvine | CA | 92623
Phone: (949) 261-1920 | **Fax:** (949) 261-7451
Website: www.pasternack.com | **E-Mail:** sales@pasternack.com

© 2018 Pasternack Enterprises All Rights Reserved