PASTERNACK®
THE ENGINEER'S RF SOURCE

3.5mm Female Connector Clamp/Solder Attachment for PE-SR402AL, PE-SR402FL, PE-SR402FLJ, PE-SR402TN, RG402

Configuration

- 3.5mm Female Connector
- 50 Ohms
- Straight Body Geometry
- PE-SR402AL, PE-SR402FL, PE-SR402FLJ, PE-SR402TN, RG402 Interface Type
- Clamp/Solder Attachment

Features

- Gold over Nickel Plated Beryllium Copper Contact
- 50 µin minimum contact plating

Applications

- General Purpose Test
- Custom Cable Assemblies

Description

Pasternack's PE45011 3.5mm female connector with clamp/solder attachment for PE-SR402AL, PE-SR402FL, PE-SR402FLJ, PE-SR402TN and RG402 is part of our full line of RF components available for same-day shipping.

Our 3.5mm female connector PE45011 datasheet specifications and drawing with dimensions are shown below in this PDF. Pasternack's broad catalog of RF, microwave and millimeter wave connectors allows designers to configure and customize their signal connections however they like. Whether the need is to provide an I/O for a board design, or simply create a custom cable assembly configuration, Pasternack has the right connector for the job. Pasternack can also expertly build your custom cable assemblies for you and ship same-day.

Mechanical Specifications

Size

Length	0.862 in [21.89 mm]
Width/Dia.	0.351 in [8.92 mm]
Weight	0.012 lbs [5.44 g]

Material Specifications

Description	Material	Plating
Contact	Beryllium Copper	Gold over Nickel 50 µin minimum
Insulation	PCTFE	
Body	Passivated Stainless Steel	SAE-AMS-2700

Click the following link (or enter part number in "SEARCH" on website) to obtain additional part information including price, inventory and certifications: 3.5mm Female Connector Clamp/Solder Attachment for PE-SR402AL, PE-SR402FL, PE-SR402FLJ, PE-SR402TN, RG402 PE45011

Pasternack Enterprises, Inc. • P.O. Box 16759, Irvine, CA 92623
Phone: (866) 727-8376 or (949) 261-1920 • **Fax:** (949) 261-7451
Sales@Pasternack.com • Techsupport@Pasternack.com

© 2016 Pasternack Enterprises All Rights Reserved

3.5mm Female Connector Clamp/Solder Attachment for PE-SR402AL, PE-SR402FL, PE-SR402FLJ, PE-SR402TN, RG402

Compliance Certifications (see product page for current document)

Plotted and Other Data

Notes:

3.5mm Female Connector Clamp/Solder Attachment for PE-SR402AL, PE-SR402FL, PE-SR402FLJ, PE-SR402TN, RG402 from Pasternack Enterprises has same day shipment for domestic and International orders. Our RF, microwave and millimeter wave products maintain a 99% availability and are part of the broadest selection in the industry.

Click the following link (or enter part number in "SEARCH" on website) to obtain additional part information including price, inventory and certifications: 3.5mm Female Connector Clamp/Solder Attachment for PE-SR402AL, PE-SR402FL, PE-SR402FLJ, PE-SR402TN, RG402 PE45011

URL: https://www.pasternack.com/3.5mm-female-standard-rg402-u-pe-sr402fl-connector-pe45011-p.aspx

The information contained in this document is accurate to the best of our knowledge and representative of the part described herein. It may be necessary to make modifications to the part and/or the documentation of the part, in order to implement improvements. Pasternack reserves the right to make such changes as required. Unless otherwise stated, all specifications are nominal. Pasternack does not make any representation or warranty regarding the suitability of the part described herein for any particular purpose, and Pasternack does not assume any liability arising out of the use of any part or documentation.

Pasternack Enterprises, Inc. • P.O. Box 16759, Irvine, CA 92623
Phone: (866) 727-8376 or (949) 261-1920 • **Fax:** (949) 261-7451
Sales@Pasternack.com • Techsupport@Pasternack.com

© 2016 Pasternack Enterprises All Rights Reserved

PE45011 CAD Drawing

3.5mm Female Connector Clamp/Solder Attachment for PE-SR402AL, PE-SR402FL, PE-SR402FLJ, PE-SR402TN, RG402

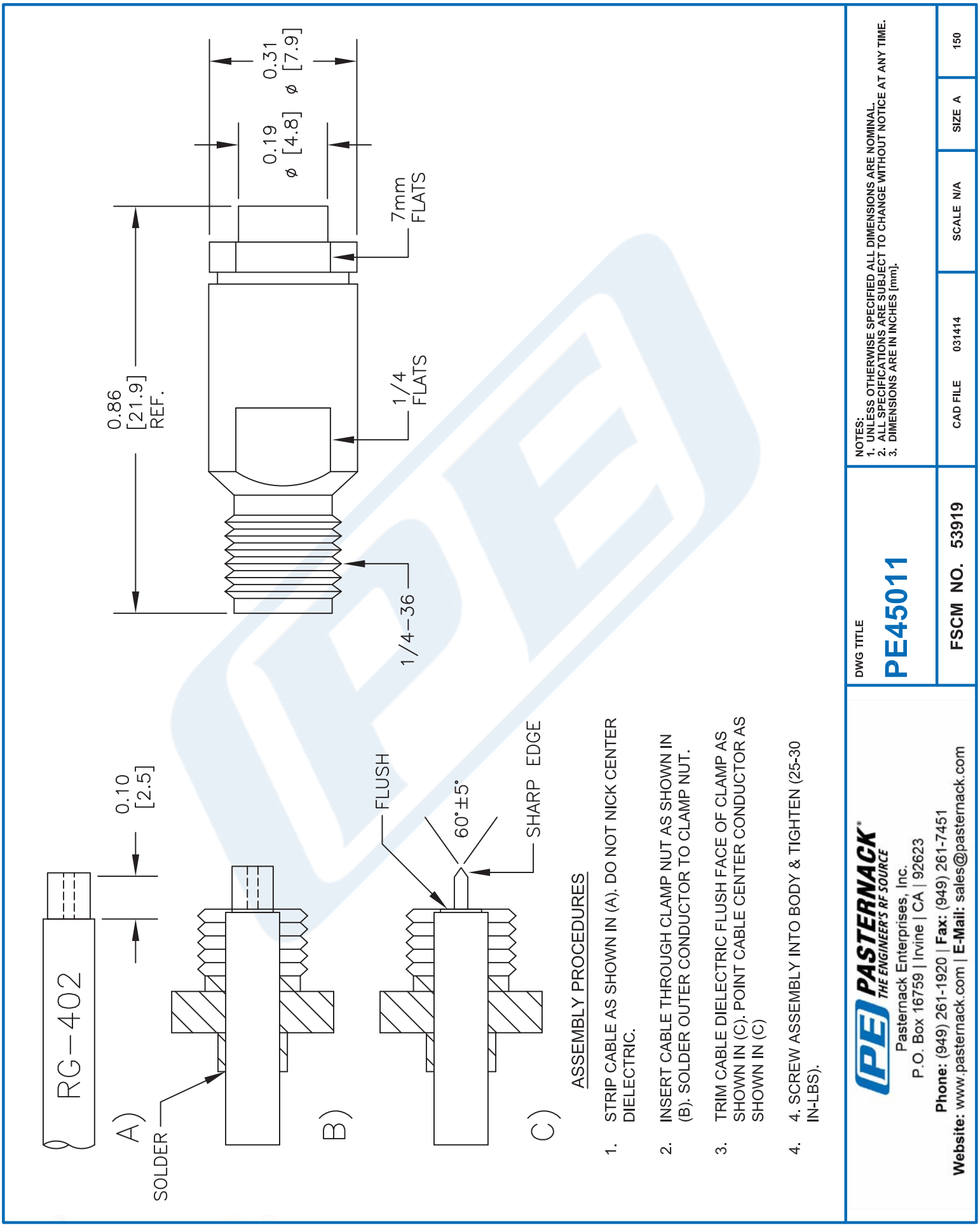

© 2016 Pasternack Enterprises All Rights Reserved

PASTERNACK®
THE ENGINEER'S RF SOURCE

N Male Connector Clamp/Solder Attachment For PE-SR402AL, PE-SR402FL, RG402

TECHNICAL DATA SHEET PE4006

Configuration

Connector	N Male
Connector Interface Type	PE-SR402AL,PE-SR402FL,RG402
Attachment Method (Shield/Contact)	Clamp/Solder
Body Style	Straight

Electrical Specifications

Frequency Range, GHz	DC to 4
Impedance, Ohms	50
Maximum VSWR	1.5:1

Mechanical Specifications

Size

Length, in [mm]	1.36 [34.54]
Width/Dia., in [mm]	0.8 [20.32]
Weight, lbs [g]	0.082 [37.19]

Connector

Type	N Male
Contact Material and Plating	Brass, Gold
Contact Plating Specification	30µ in. minimum
Coupling Nut Material and Plating	Brass, Nickel
Coupling Nut Plating Specification	100µ in. minimum
Body Material and Plating	Brass, Nickel
Body Plating Specification	100µ in. minimum
Dielectric Type	Teflon

Compliance Certifications (visit www.Pasternack.com for current document)

RoHS Compliant

Click the following link (or enter part number in "SEARCH" on website) to obtain additional part information including price, inventory and certifications: N Male Connector Clamp/Solder Attachment For PE-SR402AL, PE-SR402FL, RG402 PE4006

Pasternack Enterprises, Inc. • P.O. Box 16759, Irvine, CA 92623
Phone: (866) 727-8376 or (949) 261-1920 • **Fax:** (949) 261-7451
Sales@Pasternack.com • Techsupport@Pasternack.com

© 2014 Pasternack Enterprises All Rights Reserved

N Male Connector Clamp/Solder Attachment For PE-SR402AL, PE-SR402FL, RG402

Plotted and Other Data

Notes:

- Values at +25 °C, sea level

N Male Connector Clamp/Solder Attachment For PE-SR402AL, PE-SR402FL, RG402 from Pasternack Enterprises has same day shipment for domestic and International orders. Our RF, microwave and millimeter wave products maintain a 99% availability and are part of the broadest selection in the industry.

Click the following link (or enter part number in "SEARCH" on website) to obtain additional part information including price, inventory and certifications: N Male Connector Clamp/Solder Attachment For PE-SR402AL, PE-SR402FL, RG402 PE4006

URL: http://www.pasternack.com/n-male-standard-pe-sr402al-pe-sr402fl-rg402-connector-pe4006-p.aspx

The information contained in this document is accurate to the best of our knowledge and representative of the part described herein. It may be necessary to make modifications to the part and/or the documentation of the part, in order to implement improvements. Pasternack reserves the right to make such changes as required. Unless otherwise stated, all specifications are nominal. Pasternack does not make any representation or warranty regarding the suitability of the part described herein for any particular purpose, and Pasternack does not assume any liability arising out of the use of any part or documentation.

Pasternack Enterprises, Inc. • P.O. Box 16759, Irvine, CA 92623
Phone: (866) 727-8376 or (949) 261-1920 • **Fax:** (949) 261-7451
Sales@Pasternack.com • Techsupport@Pasternack.com

© 2014 Pasternack Enterprises All Rights Reserved

PE4006 CAD Drawing

N Male Connector Clamp/Solder Attachment For PE-SR402AL, PE-SR402FL, RG402

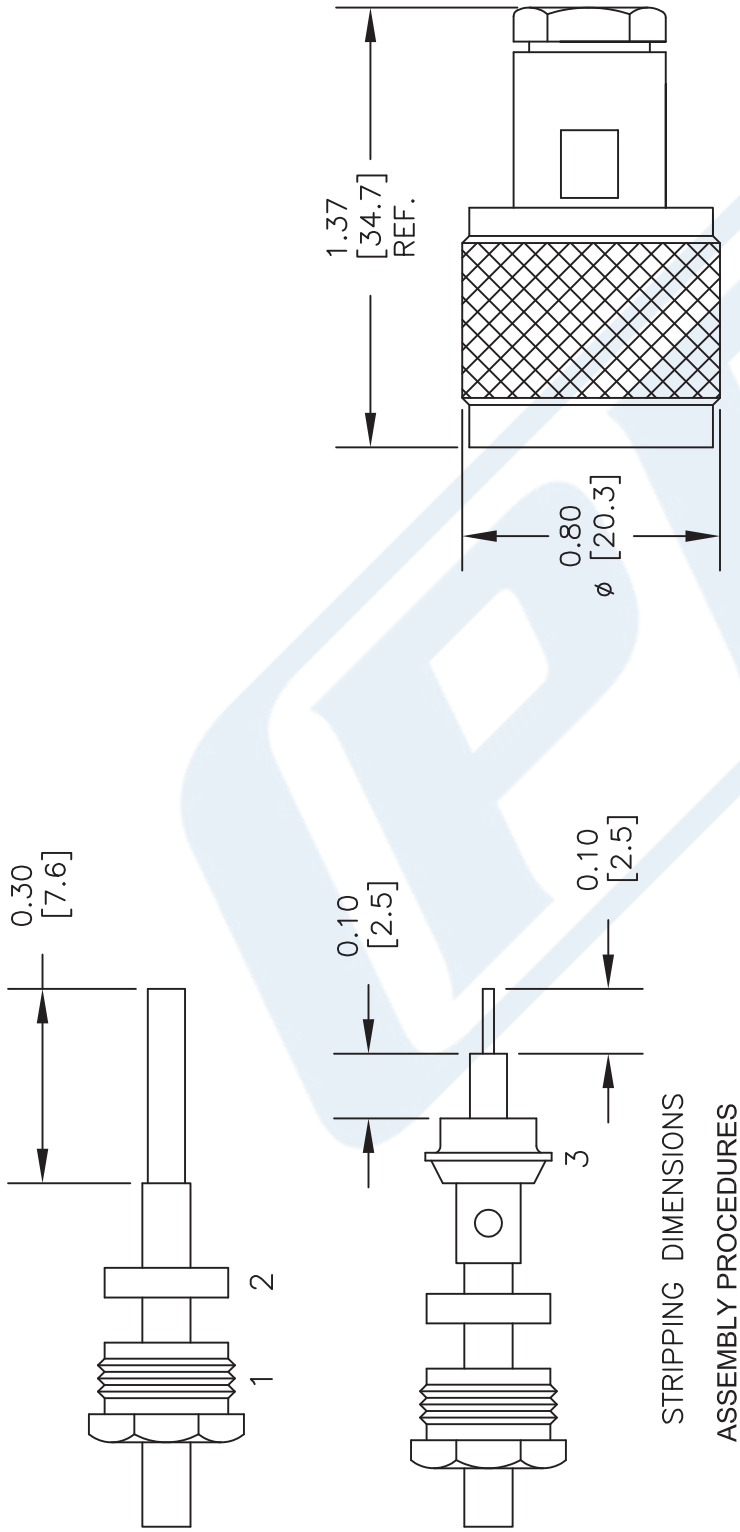

STRIPPING DIMENSIONS

ASSEMBLY PROCEDURES

1. SLIDE CLAMP NUT (1) & GASKET (2) OVER CABLE. STRIP CABLE AS SHOWN IN ASSEMBLY (A). DO NOT CUT DIELECTRIC.
2. SLIDE ADAPTER (3) OVER CABLE UNTIL ADAPTER (3) BOTTOMS ON OUTER CONDUCTOR. SOLDER ADAPTER (3) TO OUTER CONDUCTOR USING MINIMUM HEAT.
3. STRIP CABLE AS SHOWN IN ASSEMBLY (B). SOLDER CONTACT TO CENTER CONDUCTOR. SLIDE ASSEMBLY FORWARD & TIGHTEN TO BODY.

NOTES:
1. UNLESS OTHERWISE SPECIFIED ALL DIMENSIONS ARE NOMINAL.
2. ALL SPECIFICATIONS ARE SUBJECT TO CHANGE WITHOUT NOTICE AT ANY TIME.
3. DIMENSIONS ARE IN INCHES [mm].
4. FITS MIL-C-17 AND EQUIVALENT CABLES.

DWG TITLE
PE4006

FSCM NO. 53919

CAD FILE 042109 | SCALE N/A | SIZE A | 127

PASTERNACK® THE ENGINEER'S RF SOURCE
Pasternack Enterprises, Inc.
P.O. Box 16759 | Irvine | CA | 92623
Phone: (949) 261-1920 | **Fax:** (949) 261-7451
Website: www.pasternack.com | **E-Mail:** sales@pasternack.com

© 2014 Pasternack Enterprises All Rights Reserved

PASTERNACK®
www.pasternack.com

RG402 Coax Cable with Copper Outer Conductor

TECHNICAL DATA SHEET RG402/U

RG402 Coax Cable with Copper Outer Conductor

Configuration

Inner Conductor Material and Plating	Copper Clad Steel, Silver
Dielectric Type	PTFE
Shield Materials	Copper
Jacket Material and Color	Tan

Electrical Specifications

Impedance, Ohms	50
Maximum Operating Frequency, GHz	36
Capacitance, pF/ft [pF/m]	29.9 [98.1]
Dielectric Withstanding Voltage, Vrms	5,000

Electrical Specifications by Frequency

Frequency 1

Frequency, MHz	1000
Attenuation, dB/100ft [dB/100m]	12 [39.37]
Power Handling, Watts	450

Frequency 2

Frequency, GHz	10
Attenuation, dB/100ft [dB/100m]	45 [147.64]
Power Handling, Watts	120

Frequency 3

Frequency, GHz	20
Attenuation, dB/100ft [dB/100m]	70 [229.66]
Power Handling, Watts	70

Mechanical Specifications

Temperature

Operating Range, deg C	-55 to +125

Inner Conductor

Number of Strands	1
Material	Copper Clad Steel
Plating	Silver
Diameter, in [mm]	0.036 [0.91]

Dielectric:

Type	PTFE
Diameter, in [mm]	0.117 [2.97]

Click the following link (or enter part number in “SEARCH” on website) to obtain additional part information including price, inventory and certifications: RG402 Coax Cable with Copper Outer Conductor RG402/U

The information contained in this document is accurate to the best of our knowledge and representative of the part described herein. It may be necessary to make modifications to the part and/or the documentation of the part, in order to implement improvements. Pasternack reserves the right to make such changes as required. Unless otherwise stated, all specifications are nominal.

Pasternack Enterprises, Inc. • P.O. Box 16759, Irvine, CA 92623
Phone: (866) 727-8376 or (949) 261-1920 • **Fax:** (949) 261-7451
Sales@Pasternack.com • Techsupport@Pasternack.com

© 2013 Pasternack Enterprises All Rights Reserved

Shield:	
Number of	1
Material 1	Copper
Diameter, in [mm]	0.141 [3.58]
Jacket:	
Color	Tan
One Time Minimum Bend Radius, in [mm]	0.15 [3.81]
Weight, lbs/ft [Kg/m]	0.034 [0.05]

Compliance Certifications (visit www.Pasternack.com for current document)

RoHS Compliant	Yes

Plotted and Other Data

Notes:	Values at 25 °C, sea level

RG402 Coax Cable with Copper Outer Conductor from Pasternack Enterprises has same day shipment for domestic and International orders. Our RF, microwave and fiber optic products maintain a 99% availability and are part of the broadest selection in the industry.

Click the following link (or enter part number in “SEARCH” on website) to obtain additional part information including price, inventory and certifications: RG402 Coax Cable with Copper Outer Conductor RG402/U

URL: http://www.pasternack.com/semirigid-0.141-rg402-50-ohm-coax-cable-copper-rg402-u-p.aspx

The information contained in this document is accurate to the best of our knowledge and representative of the part described herein. It may be necessary to make modifications to the part and/or the documentation of the part, in order to implement improvements. Pasternack reserves the right to make such changes as required. Unless otherwise stated, all specifications are nominal.

Pasternack Enterprises, Inc. • P.O. Box 16759, Irvine, CA 92623
Phone: (866) 727-8376 or (949) 261-1920 • **Fax:** (949) 261-7451
Sales@Pasternack.com • Techsupport@Pasternack.com

© 2013 Pasternack Enterprises All Rights Reserved

RG402/U CAD Drawing

RG402 Coax Cable with Copper Outer Conductor

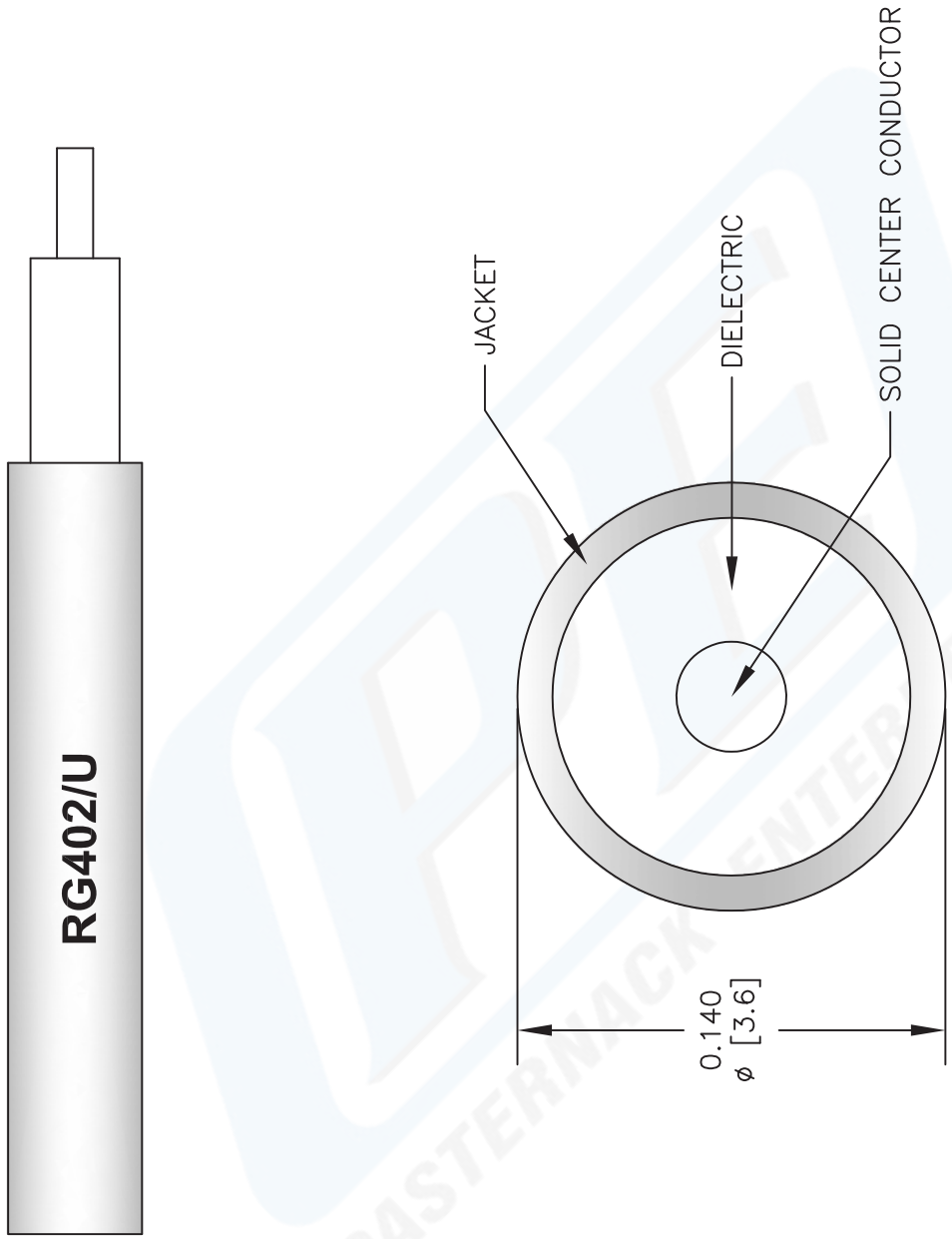

NOTES:
1. UNLESS OTHERWISE SPECIFIED ALL DIMENSIONS ARE NOMINAL.
2. ALL SPECIFICATIONS ARE SUBJECT TO CHANGE WITHOUT NOTICE AT ANY TIME.
3. DIMENSIONS ARE IN INCHES [mm].

DWG TITLE
RG402/U

FSCM NO. 53919

CAD FILE 050212-B | SCALE N/A | SIZE A | 2233

PASTERNACK®
Pasternack Enterprises, Inc.
P.O. Box 16759 | Irvine | CA | 92623
Phone: (949) 261-1920 | **Fax:** (949) 261-7451
Website: www.pasternack.com | **E-Mail:** sales@pasternack.com

© 2013 Pasternack Enterprises All Rights Reserved