MATERIALS	
BODY	BRASS NICKEL PLATED
CONTACT	GOLD PLATED
INSULATOR	PTFE

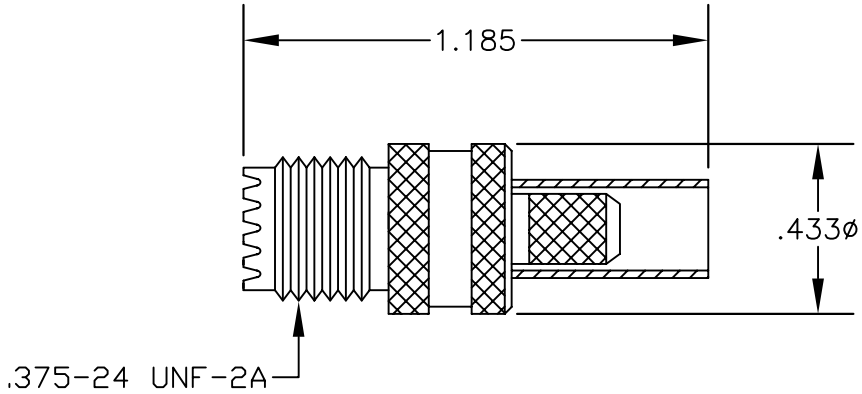

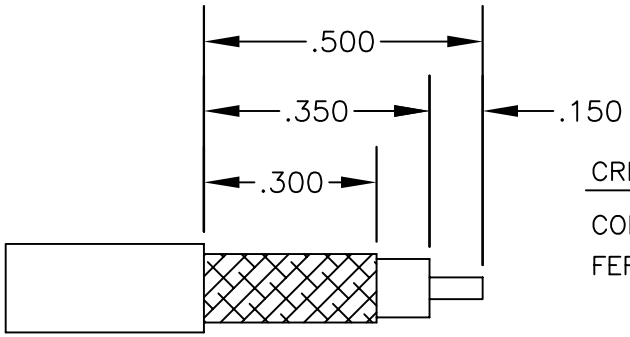

STRIPPING DIMENSIONS

CRIMP SIZES REQUIRED

CONTACT: .068" HEX CRIMP TOOL

FERRULE: .213" HEX CRIMP TOOL

PASTERNACK ENTERPRISES®
ESTABLISHED 1972

PASTERNACK ENTERPRISES, INC.
P.O BOX 16759, IRVINE, CA 92623
PHONE (949) 261-1920 FAX (949) 261-7451

WEB ADDRESS: www.pasternack.com
E-MAIL ADDRESS: sales@pasternack.com
COAXIAL & FIBER OPTICS

DWG TITLE
PE44083

DES. MINI UHF FEMALE, CRIMP ATTACHMENT FOR RG55, RG141, RG142, RG223 & RG400

SIZE A	FSCM NO. 53919	CAD FILE 062502	SCALE N/A		127

NOTES:
1. UNLESS OTHERWISE SPECIFIED ALL DIMENSIONS ARE NOMINAL.
2. ALL SPECIFICATIONS ARE SUBJECT TO CHANGE WITHOUT NOTICE AT ANY TIME.

PASTERNACK®
THE ENGINEER'S RF SOURCE

BNC Male Connector Crimp/Solder Attachment for RG55, RG141, RG142, RG223, RG400

Configuration

- BNC Male Connector
- MIL-STD-348A
- 50 Ohms
- Straight Body Geometry
- RG55, RG141, RG142, RG223, RG400 Interface Type
- Crimp/Solder Attachment

Features

- Max. Operating Frequency 4 GHz
- Good VSWR of 1.3:1
- Gold Plated Brass Contact
- 30 µin minimum contact plating

Applications

- General Purpose Test
- Custom Cable Assemblies

Description

Pasternack's PE4044 BNC male connector with crimp/solder attachment for RG55, RG141, RG142, RG223 and RG400 is part of our full line of RF components available for same-day shipping. Our BNC male connector operates up to a maximum frequency of 4 GHz and offers good VSWR of 1.3:1.

Our BNC male connector PE4044 datasheet specifications and drawing with dimensions are shown below in this PDF. Pasternack's broad catalog of RF, microwave and millimeter wave connectors allows designers to configure and customize their signal connections however they like. Whether the need is to provide an I/O for a board design, or simply create a custom cable assembly configuration, Pasternack has the right connector for the job. Pasternack can also expertly build your custom cable assemblies for you and ship same-day.

Electrical Specifications

Description	Minimum	Typical	Maximum	Units
Frequency Range	DC		4	GHz
VSWR			1.3:1	
Operating Voltage (AC)			500	Vrms

Mechanical Specifications

Size

Length	1.13 in [28.7 mm]
Width/Dia.	0.571 in [14.50 mm]
Weight	0.025 lbs [11.34 g]

Click the following link (or enter part number in "SEARCH" on website) to obtain additional part information including price, inventory and certifications: BNC Male Connector Crimp/Solder Attachment for RG55, RG141, RG142, RG223, RG400 PE4044

Pasternack Enterprises, Inc. • P.O. Box 16759, Irvine, CA 92623
Phone: (866) 727-8376 or (949) 261-1920 • **Fax:** (949) 261-7451
Sales@Pasternack.com • Techsupport@Pasternack.com

© 2016 Pasternack Enterprises All Rights Reserved

BNC Male Connector Crimp/Solder Attachment for RG55, RG141, RG142, RG223, RG400

Material Specifications

Description	Material	Plating
Contact	Brass	Gold 30 µin minimum
Insulation	PTFE	
Body	Brass	Nickel 100 µin minimum
Coupling Nut	Brass	Nickel 100 µin minimum
Crimp Sleeve	Brass	Nickel

Environmental Specifications

Temperature

Operating Range -65 to +165 deg C

Compliance Certifications (see product page for current document)

Plotted and Other Data

Notes:

BNC Male Connector Crimp/Solder Attachment for RG55, RG141, RG142, RG223, RG400 from Pasternack Enterprises has same day shipment for domestic and International orders. Our RF, microwave and millimeter wave products maintain a 99% availability and are part of the broadest selection in the industry.

Click the following link (or enter part number in "SEARCH" on website) to obtain additional part information including price, inventory and certifications: BNC Male Connector Crimp/Solder Attachment for RG55, RG141, RG142, RG223, RG400 PE4044

URL: https://www.pasternack.com/bnc-male-standard-rg55-rg141-rg142-rg223-rg400-connector-pe4044-p.aspx

The information contained in this document is accurate to the best of our knowledge and representative of the part described herein. It may be necessary to make modifications to the part and/or the documentation of the part, in order to implement improvements. Pasternack reserves the right to make such changes as required. Unless otherwise stated, all specifications are nominal. Pasternack does not make any representation or warranty regarding the suitability of the part described herein for any particular purpose, and Pasternack does not assume any liability arising out of the use of any part or documentation.

Pasternack Enterprises, Inc. • P.O. Box 16759, Irvine, CA 92623
Phone: (866) 727-8376 or (949) 261-1920 • **Fax:** (949) 261-7451
Sales@Pasternack.com • Techsupport@Pasternack.com

© 2016 Pasternack Enterprises All Rights Reserved

PE4044 CAD Drawing

BNC Male Connector Crimp/Solder Attachment for RG55, RG141, RG142, RG223, RG400

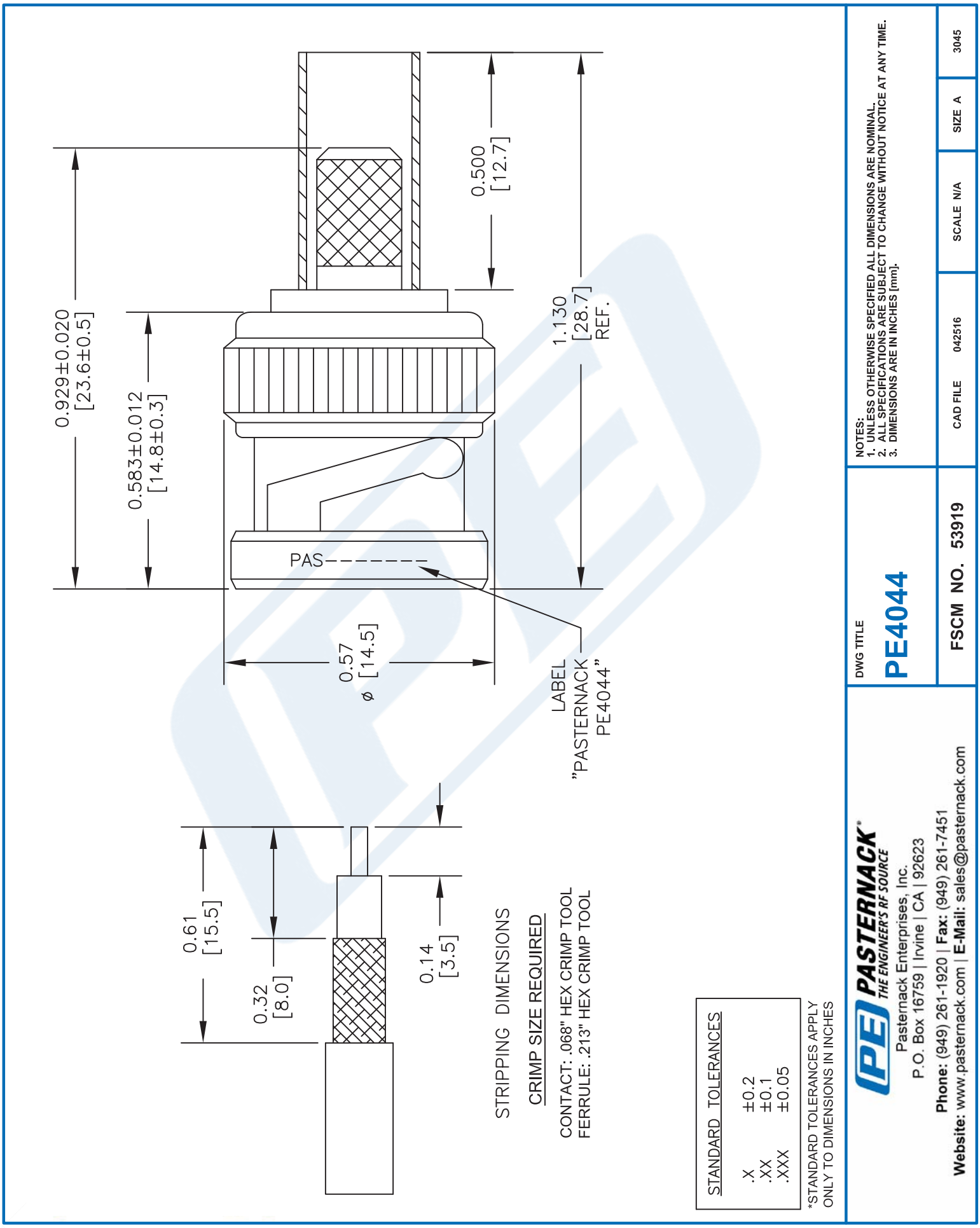

© 2016 Pasternack Enterprises All Rights Reserved

PASTERNACK®
www.pasternack.com

Flexible RG142 Coax Cable Double Shielded with Tan FEP Jacket

TECHNICAL DATA SHEET RG142B/U

Flexible RG142 Coax Cable Double Shielded with Tan FEP Jacket

Configuration

Inner Conductor Material and Plating	Copper Clad Steel, Silver
Dielectric Type	PTFE
Shield Materials	Silver Plated Copper Braid, Silver Plated Copper Braid
Jacket Material and Color	FEP, Tan

Electrical Specifications

Impedance, Ohms	50
Velocity of Propagation, %	69.2
Maximum Operating Frequency, GHz	8
RF Shielding, dB	90
Capacitance, pF/ft [pF/m]	29.4 [96.46]
Maximum Operating Voltage, Volts	1,900

Electrical Specifications by Frequency

Frequency 1

Frequency, MHz	100
Attenuation, dB/100ft [dB/100m]	3.9 [12.8]

Frequency 2

Frequency, MHz	1000
Attenuation, dB/100ft [dB/100m]	13 [42.65]

Frequency 3

Frequency, GHz	3
Attenuation, dB/100ft [dB/100m]	23.8 [78.08]

Frequency 4

Frequency, GHz	5
Attenuation, dB/100ft [dB/100m]	36 [118.11]

Mechanical Specifications

Temperature

Operating Range, deg C	-55 to +200

Inner Conductor

Number of Strands	1
Material	Copper Clad Steel
Plating	Silver
Diameter, in [mm]	0.037 [0.94]

Click the following link (or enter part number in “SEARCH” on website) to obtain additional part information including price, inventory and certifications: Flexible RG142 Coax Cable Double Shielded with Tan FEP Jacket RG142B/U

The information contained in this document is accurate to the best of our knowledge and representative of the part described herein. It may be necessary to make modifications to the part and/or the documentation of the part, in order to implement improvements. Pasternack reserves the right to make such changes as required. Unless otherwise stated, all specifications are nominal.

Pasternack Enterprises, Inc. • P.O. Box 16759, Irvine, CA 92623
Phone: (866) 727-8376 or (949) 261-1920 • **Fax:** (949) 261-7451
Sales@Pasternack.com • Techsupport@Pasternack.com

© 2013 Pasternack Enterprises All Rights Reserved

Flexible RG142 Coax Cable Double Shielded with Tan FEP Jacket

TECHNICAL DATA SHEET RG142B/U

Dielectric:

Type	PTFE
Diameter, in [mm]	0.116 [2.95]

Shield:

Number of	2
Material 1	Silver Plated Copper Braid
Material 2	Silver Plated Copper Braid
Diameter, in [mm]	0.156 [3.96]

Jacket:

Material	FEP
Diameter, in [mm]	0.195 [4.95]
Color	Tan
One Time Minimum Bend Radius, in [mm]	0.984 [24.99]
Repeated Minimum Bend Radius, in [mm]	2 [50.8]
Weight, lbs/ft [Kg/m]	0.046 [0.07]

Compliance Certifications (visit www.Pasternack.com for current document)

RoHS Compliant	Yes

Plotted and Other Data

Notes:	Values at 25 °C, sea level

URL: http://www.pasternack.com/flexible-0.195-rg142-50-ohm-coax-cable-fep-jacket-rg142b-u-p.aspx

Flexible RG142 Coax Cable Double Shielded with Tan FEP Jacket from Pasternack Enterprises has same day shipment for domestic and International orders. Our RF, microwave and fiber optic products maintain a 99% availability and are part of the broadest selection in the industry.

The information contained in this document is accurate to the best of our knowledge and representative of the part described herein. It may be necessary to make modifications to the part and/or the documentation of the part, in order to implement improvements. Pasternack reserves the right to make such changes as required. Unless otherwise stated, all specifications are nominal.

Pasternack Enterprises, Inc. • P.O. Box 16759, Irvine, CA 92623
Phone: (866) 727-8376 or (949) 261-1920 • **Fax:** (949) 261-7451
Sales@Pasternack.com • Techsupport@Pasternack.com

© 2013 Pasternack Enterprises All Rights Reserved

RG142B/U CAD Drawing

Flexible RG142 Coax Cable Double Shielded with Tan FEP Jacket

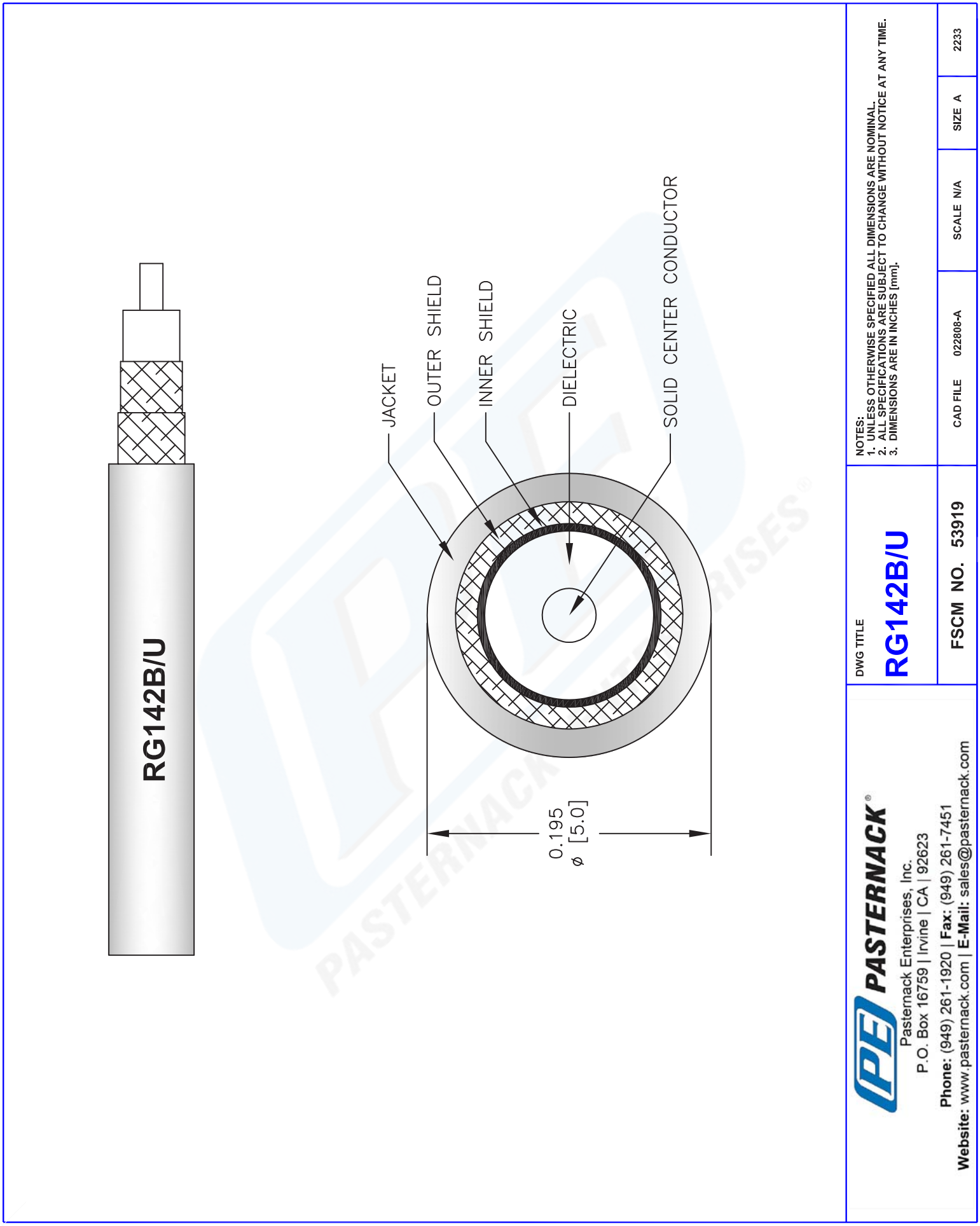

© 2012 Pasternack Enterprises All Rights Reserved