PASTERNACK
an INFINITE brand

Mini SMP Female Connector Solder Attachment for PE-SR405AL, PE-SR405FL, PE-SR405FLJ, PE-SR405TN, RG405

RF Connectors
Technical Data Sheet

PE44492

Configuration

- Mini SMP Female Connector
- MIL-STD-348A
- 50 Ohms
- Straight Body Geometry
- Connector Interface Types: PE-SR405AL, PE-SR405FL, PE-SR405FLJ, PE-SR405TN, RG405

Features

- Max. Operating Frequency 40 GHz
- Gold Plated Beryllium Copper Contact
- Blind Mate Connector

Applications

- General Purpose Test
- Custom Cable Assemblies

Description

Pasternack's PE44492 Mini SMP female connector with solder attachment for PE-SR405AL, PE-SR405FL, PE-SR405FLJ, PE-SR405TN and RG405 is part of our full line of RF components available for same-day shipping. Our Mini SMP female connector operates up to a maximum frequency of 40 GHz. The Pasternack blind mate connector is ideal for applications where direct visual or tactile access to the connection point is not possible, for example, when two circuit boards need to be mated.

Our Mini SMP female connector PE44492 datasheet specifications and drawing with dimensions are shown below in this PDF. Pasternack's broad catalog of RF, microwave and millimeter wave connectors allows designers to configure and customize their signal connections however they like. Whether the need is to provide an I/O for a board design, or simply create a custom cable assembly configuration, Pasternack has the right connector for the job. Pasternack can also expertly build your custom cable assemblies for you and ship same-day.

Electrical Specifications

Description	Minimum	Typical	Maximum	Units
Frequency Range	DC		40	GHz
Operating Voltage (AC)			325	Vrms
Inner Conductor DC Resistance			6	mOhms
Outer Conductor DC Resistance			2	mOhms
Insulation Resistance	5,000			MOhms

Performance by Frequency

Description	F1	F2	F3	F4	F5	Units
Frequency Range	DC to 18	18 to 26.5	26.5 to 40			GHz
VSWR, Max	1.11:1	1.23:1	1.5:1			

Electrical Specification Notes:
Insertion loss = 0.05 x sqrt(fGHz) dB max up to 26.5 GHz.

Click the following link (or enter part number in "SEARCH" on website) to obtain additional part information including price, inventory and certifications: Mini SMP Female Connector Solder Attachment for PE-SR405AL, PE-SR405FL, PE-SR-405FLJ, PE-SR405TN, RG405 PE44492

Pasternack Enterprises, Inc. • P.O. Box 16759, Irvine, CA 92623
Phone: (866) 727-8376 or (949) 261-1920 • **Fax:** (949) 261-7451
Sales@Pasternack.com • Techsupport@Pasternack.com

© 2020 Pasternack Enterprises All Rights Reserved

PASTERNACK
an INFINITE brand

Mini SMP Female Connector Solder Attachment for PE-SR405AL, PE-SR405FL, PE-SR405FLJ, PE-SR405TN, RG405

RF Connectors
Technical Data Sheet

PE44492

Mechanical Specifications

Size

Length	0.343 in [8.71 mm]
Width/Dia.	0.138 in [3.51 mm]
Height	0 in [0 mm]
Weight	0.00224 lbs [1.02 g]

Material Specifications

Description	Material	Plating
Contact	Beryllium Copper	Gold
Insulation	PTFE	
Body	Beryllium Copper	Gold

Mechanical Specification Notes:
Mating cycles: 500 (smooth bore), 100 (full detent) minimum.

Environmental Specifications

Temperature

Operating Range	-55 to 155 deg C
Humidity	MIL-STD-202, Method 106
Shock	MIL-STD-202, Method 213, Condition A
Vibration	MIL-STD-202, Method 204, Condition A
Thermal Shock	MIL-STD-202, Method 107, Condition B

Compliance Certifications (see product page for current document)

Plotted and Other Data

Notes:

Click the following link (or enter part number in “SEARCH” on website) to obtain additional part information including price, inventory and certifications: Mini SMP Female Connector Solder Attachment for PE-SR405AL, PE-SR405FL, PE-SR-405FLJ, PE-SR405TN, RG405 PE44492

Pasternack Enterprises, Inc. • P.O. Box 16759, Irvine, CA 92623
Phone: (866) 727-8376 or (949) 261-1920 • **Fax:** (949) 261-7451
Sales@Pasternack.com • Techsupport@Pasternack.com

© 2020 Pasternack Enterprises All Rights Reserved

PASTERNACK
an INFINITE brand

Mini SMP Female Connector Solder Attachment for PE-SR405AL, PE-SR405FL, PE-SR405FLJ, PE-SR405TN, RG405

RF Connectors
Technical Data Sheet

PE44492

Mini SMP Female Connector Solder Attachment for PE-SR405AL, PE-SR405FL, PE-SR405FLJ, PE-SR405TN, RG405 from Pasternack Enterprises has same day shipment for domestic and International orders. Our RF, microwave and millimeter wave products maintain a 99.4% availability and are part of the broadest selection in the industry.

Click the following link (or enter part number in “SEARCH” on website) to obtain additional part information including price, inventory and certifications: Mini SMP Female Connector Solder Attachment for PE-SR405AL, PE-SR405FL, PE-SR405FLJ, PE-SR405TN, RG405 PE44492

URL: https://www.pasternack.com/mini-smp-female-standard-pe-sr405al-pe-sr405fl-rg405-connector-pe44492-p.aspx

The information contained in this document is accurate to the best of our knowledge and representative of the part described herein. It may be necessary to make modifications to the part and/or the documentation of the part, in order to implement improvements. Pasternack reserves the right to make such changes as required. Unless otherwise stated, all specifications are nominal. Pasternack does not make any representation or warranty regarding the suitability of the part described herein for any particular purpose, and Pasternack does not assume any liability arising out of the use of any part or documentation.

Pasternack Enterprises, Inc. • P.O. Box 16759, Irvine, CA 92623
Phone: (866) 727-8376 or (949) 261-1920 • **Fax:** (949) 261-7451
Sales@Pasternack.com • Techsupport@Pasternack.com

© 2020 Pasternack Enterprises All Rights Reserved

PE44492 CAD Drawing

Mini SMP Female Connector Solder Attachment for PE-SR405AL, PE-SR405FL, PE-SR405FLJ, PE-SR405TN, RG405

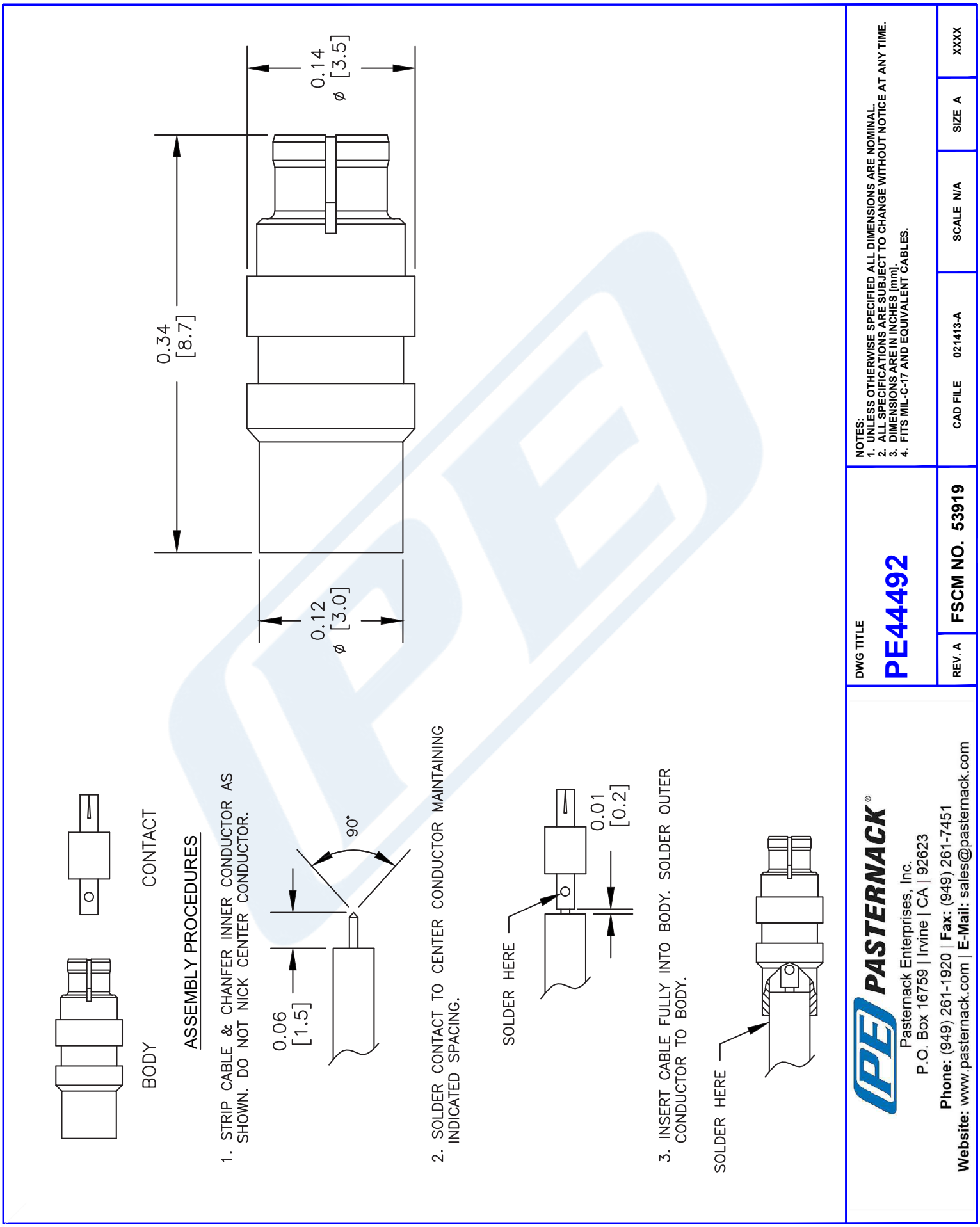

© 2020 Pasternack Enterprises All Rights Reserved

2.92mm Female Bulkhead Mount Connector Clamp/ Solder Attachment for PE-SR405AL, PE-SR405FL, PE-SR405FLJ, PE-SR405TN, RG405, .235 inch D Hole

RF Connectors Technical Data Sheet PE4992

Configuration

- 2.92mm Female Connector
- 50 Ohms
- Straight Body Geometry
- PE-SR405AL, PE-SR405FL, PE-SR405FLJ, PE-SR405TN, RG405 Interface Type
- Clamp/Solder Attachment
- Bulkhead

Features

- Gold over Nickel Plated Beryllium Copper Contact
- 50 µin minimum contact plating

Applications

- General Purpose Test
- Rack and Panel Mount Applications
- Custom Cable Assemblies

Description

Pasternack's PE4992 2.92mm female bulkhead connector with clamp/solder attachment for PE-SR405AL, PE-SR405FL, PE-SR405FLJ, PE-SR405TN and RG405 (.235 inch D hole) is part of our full line of RF components available for same-day shipping. This 2.92mm bulkhead connector allows designers to create external connections on their product enclosures, and can be used in a variety of other rack mount and panel mount applications.

Our 2.92mm female bulkhead connector PE4992 datasheet specifications and drawing with dimensions are shown below in this PDF. Pasternack's broad catalog of RF, microwave and millimeter wave connectors allows designers to configure and customize their signal connections however they like. Whether the need is to provide an I/O for a board design, or simply create a custom cable assembly configuration, Pasternack has the right connector for the job. Pasternack can also expertly build your custom cable assemblies for you and ship same-day.

Mechanical Specifications

Size

Length	0.887 in [22.53 mm]
Width/Dia.	0.312 in [7.92 mm]
Weight	0.019 lbs [8.62 g]

Material Specifications

Description	Material	Plating
Contact	Beryllium Copper	Gold over Nickel 50 µin minimum
Body	Passivated Stainless Steel	SAE-AMS-2700

Click the following link (or enter part number in "SEARCH" on website) to obtain additional part information including price, inventory and certifications: 2.92mm Female Bulkhead Mount Connector Clamp/Solder Attachment for PE-SR405AL, PE-SR405FL, PE-SR405FLJ, PE-SR405TN, RG405, .235 inch D Hole PE4992

Pasternack Enterprises, Inc. • P.O. Box 16759, Irvine, CA 92623
Phone: (866) 727-8376 or (949) 261-1920 • **Fax:** (949) 261-7451
Sales@Pasternack.com • Techsupport@Pasternack.com

© 2016 Pasternack Enterprises All Rights Reserved

2.92mm Female Bulkhead Mount Connector Clamp/ Solder Attachment for PE-SR405AL, PE-SR405FL, PE-SR405FLJ, PE-SR405TN, RG405, .235 inch D Hole

Compliance Certifications (see product page for current document)

Plotted and Other Data

Notes:

2.92mm Female Bulkhead Mount Connector Clamp/Solder Attachment for PE-SR405AL, PE-SR405FL, PE-SR405FLJ, PE-SR405TN, RG405, .235 inch D Hole from Pasternack Enterprises has same day shipment for domestic and International orders. Our RF, microwave and millimeter wave products maintain a 99% availability and are part of the broadest selection in the industry.

Click the following link (or enter part number in “SEARCH” on website) to obtain additional part information including price, inventory and certifications: 2.92mm Female Bulkhead Mount Connector Clamp/Solder Attachment for PE-SR405AL, PE-SR405FL, PE-SR405FLJ, PE-SR405TN, RG405, .235 inch D Hole PE4992

URL: https://www.pasternack.com/2.92mm-female-standard-pe-sr405al-pe-sr405fl-rg405-connector-pe4992-p.aspx

The information contained in this document is accurate to the best of our knowledge and representative of the part described herein. It may be necessary to make modifications to the part and/or the documentation of the part, in order to implement improvements. Pasternack reserves the right to make such changes as required. Unless otherwise stated, all specifications are nominal. Pasternack does not make any representation or warranty regarding the suitability of the part described herein for any particular purpose, and Pasternack does not assume any liability arising out of the use of any part or documentation.

Pasternack Enterprises, Inc. • P.O. Box 16759, Irvine, CA 92623
Phone: (866) 727-8376 or (949) 261-1920 • **Fax:** (949) 261-7451
Sales@Pasternack.com • Techsupport@Pasternack.com

© 2016 Pasternack Enterprises All Rights Reserved

PE4992 CAD Drawing

2.92mm Female Bulkhead Mount Connector Clamp/Solder Attachment for PE-SR405AL, PE-SR405FL, PE-SR405FLJ, PE-SR405TN, RG405, .235 inch D Hole

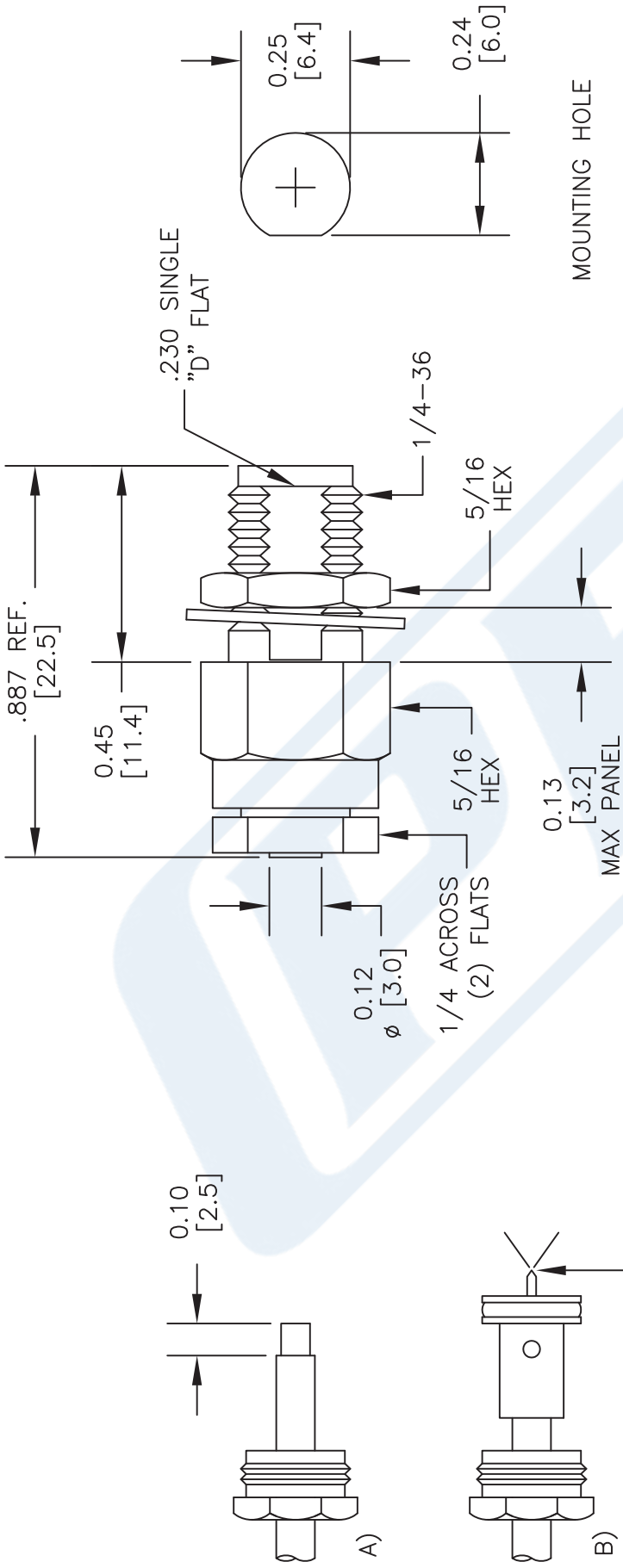

ASSEMBLY PROCEDURES

1. SLIDE CLAMP NUT OVER CABLE. STRIP CABLE AS SHOWN IN (A). DO NOT NICK DIELECTRIC.
2. INSERT CABLE THRU ADAPTER UNTIL IT BOTTOMS OUT. SOLDER OUTER CONDUCTOR TO ADAPTER & TRIM DIELECTRIC AS SHOWN IN (B).
3. SCREW ASSEMBLY INTO BODY & TIGHTEN NUT.

NOTES:
1. UNLESS OTHERWISE SPECIFIED ALL DIMENSIONS ARE NOMINAL.
2. ALL SPECIFICATIONS ARE SUBJECT TO CHANGE WITHOUT NOTICE AT ANY TIME.
3. DIMENSIONS ARE IN INCHES [mm].
4. FITS MIL-C-17 AND EQUIVALENT CABLES.

DWG TITLE PE4992

REV. B	FSCM NO. 53919	CAD FILE 052912	SCALE N/A	SIZE A	2233

PASTERNACK ENTERPRISES, INC.
P.O BOX 16759, IRVINE, CA 92623
PHONE (949) 261-1920 FAX (949) 261-7451
WEB ADDRESS: www.pasternack.com
E-MAIL ADDRESS: sales@pasternack.com
COAXIAL & FIBER OPTICS
PASTERNACK ENTERPRISES®
ESTABLISHED 1972

© 2016 Pasternack Enterprises All Rights Reserved

PASTERNACK
an INFINITE brand

086 Semi-rigid Coax Cable with Tinned Aluminum Outer Conductor

RF Cables
Technical Data Sheet

PE-SR405AL

Configuration

- Semi-Rigid Cable
- 1 Shield(s)

Features

- Tinned Aluminum Outer Conductor
- Max Frequency 40 GHz

Applications

- Test and Measurement
- Communication Systems
- Wireless Systems
- Medical Equipment
- RADAR
- Low Loss Applications
- Field Installations

Description

Semi-rigid coaxial cable provides the highest electrical performance including low loss and high RF shielding effectiveness, which is why it is the cable type of choice for many RF and microwave engineers. Pasternack's PE-SR405AL is a .086 semi-rigid coax cable constructed with silver plated copper clad steel inner conductor, solid PTFE dielectric and tinned aluminum outer conductor. This .086 semi-rigid cable has a maximum operating frequency of 40 GHz and is designed as a superior alternative to the standard RG-405 cable. Semi-rigid cable is used in a wide variety of applications including when higher operating frequency or precision performance is required. PE-SR405AL .086 semi-rigid coaxial cable datasheet specifications and outline drawing are shown in the PDF below.

Pasternack carries a wide range of cables ready to ship same day to fit your needs. They are available in corrugated, flexible, formable or semi-rigid versions with different constructions of conductor materials, dielectric materials, shielding configurations and jacket materials. Our cables are designed to fit a wide range of performance criteria including attenuation, operating temperature, environmental factor, and power capability.

Electrical Specifications

Description	Minimum	Typical	Maximum	Units
Frequency Range	DC		40	GHz
Impedance		50		Ohms
Dielectric Withstanding Voltage (AC)			5,000	Vrms

Click the following link (or enter part number in "SEARCH" on website) to obtain additional part information including price, inventory and certifications: 086 Semi-rigid Coax Cable with Tinned Aluminum Outer Conductor PE-SR405AL

Pasternack Enterprises, Inc. • P.O. Box 16759, Irvine, CA 92623
Phone: (866) 727-8376 or (949) 261-1920 • **Fax:** (949) 261-7451
Sales@Pasternack.com • Techsupport@Pasternack.com

© 2019 Pasternack Enterprises All Rights Reserved

086 Semi-rigid Coax Cable with Tinned Aluminum Outer Conductor

RF Cables
Technical Data Sheet

PE-SR405AL

Performance by Frequency Band

Description	F1	F2	F3	F4	F5	Units
Frequency	1	10	20			GHz
Attenuation, Max	23	81	131			dB/100ft
	75.46	265.75	429.79			dB/100m
Input Power (CW), Max	130	35	20			Watts

Mechanical Specifications

Min. Bend Radius (Installation) 0.05 in [1.27 mm]

Construction Specifications

Description	Material and Plating	Diameter
Inner Conductor	Copper Clad Steel, Silver, 1 Strands	0.02 in [0.51 mm]
Conductor Type	Solid	
Dielectric	PTFE	0.066 in [1.68 mm]
Outer Conductor	Tinned Aluminum	0.086 in [2.18 mm]

Environmental Specifications

Temperature

Operating Range -55 to +125 deg C

Click the following link (or enter part number in “SEARCH” on website) to obtain additional part information including price, inventory and certifications: 086 Semi-rigid Coax Cable with Tinned Aluminum Outer Conductor PE-SR405AL

Pasternack Enterprises, Inc. • P.O. Box 16759, Irvine, CA 92623
Phone: (866) 727-8376 or (949) 261-1920 • **Fax:** (949) 261-7451
Sales@Pasternack.com • Techsupport@Pasternack.com

© 2019 Pasternack Enterprises All Rights Reserved

086 Semi-rigid Coax Cable with Tinned Aluminum Outer Conductor

RF Cables
Technical Data Sheet

PE-SR405AL

Compliance Certifications (see product page for current document)

Plotted and Other Data

Notes:

086 Semi-rigid Coax Cable with Tinned Aluminum Outer Conductor from Pasternack Enterprises has same day shipment for domestic and International orders. Our RF, microwave and millimeter wave products maintain a 99.4% availability and are part of the broadest selection in the industry.

Click the following link (or enter part number in “SEARCH” on website) to obtain additional part information including price, inventory and certifications: 086 Semi-rigid Coax Cable with Tinned Aluminum Outer Conductor PE-SR405AL

URL: https://www.pasternack.com/semirigid-0.085-50-ohm-coax-cable-tinned-aluminum-pe-sr405al-p.aspx

The information contained in this document is accurate to the best of our knowledge and representative of the part described herein. It may be necessary to make modifications to the part and/or the documentation of the part, in order to implement improvements. Pasternack reserves the right to make such changes as required. Unless otherwise stated, all specifications are nominal. Pasternack does not make any representation or warranty regarding the suitability of the part described herein for any particular purpose, and Pasternack does not assume any liability arising out of the use of any part or documentation.

Pasternack Enterprises, Inc. • P.O. Box 16759, Irvine, CA 92623
Phone: (866) 727-8376 or (949) 261-1920 • **Fax:** (949) 261-7451
Sales@Pasternack.com • Techsupport@Pasternack.com

© 2019 Pasternack Enterprises All Rights Reserved

PE-SR405AL CAD Drawing

086 Semi-rigid Coax Cable with Tinned Aluminum Outer Conductor

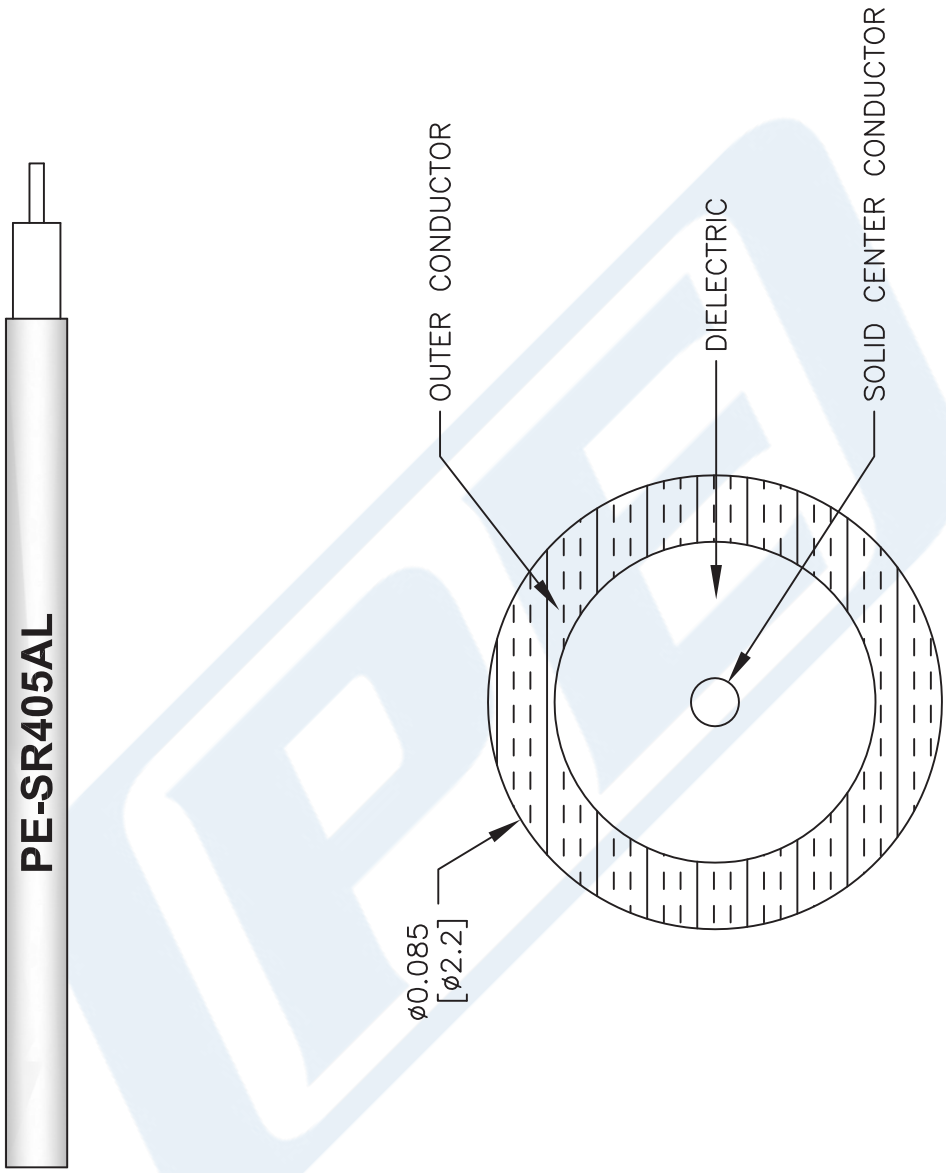

NOTES:
1. UNLESS OTHERWISE SPECIFIED ALL DIMENSIONS ARE NOMINAL.
2. ALL SPECIFICATIONS ARE SUBJECT TO CHANGE WITHOUT NOTICE AT ANY TIME.
3. DIMENSIONS ARE IN INCHES [mm].

DWG TITLE
PE-SR405AL

FSCM NO. 53919

CAD FILE 111716 | SCALE N/A | SIZE A | 41742

PASTERNACK®
THE ENGINEER'S RF SOURCE
Pasternack Enterprises, Inc.
P.O. Box 16759 | Irvine | CA | 92623
Phone: (949) 261-1920 | **Fax:** (949) 261-7451
Website: www.pasternack.com | **E-Mail:** sales@pasternack.com

© 2019 Pasternack Enterprises All Rights Reserved