PASTERNACK®
THE ENGINEER'S RF SOURCE

10-32 Male Connector Crimp/Solder Attachment for RG188-DS, RG316-DS

Configuration

- 10-32 Male Connector
- 50 Ohms
- Straight Body Geometry
- RG188-DS, RG316-DS Interface Type
- Crimp/Solder Attachment
- 1/4 in. Hex

Features

- Max. Operating Frequency 2 GHz
- Good VSWR of 1.3:1
- Gold Plated Brass Contact
- 30µ in. minimum contact plating

Applications

- General Purpose Test
- Custom Cable Assemblies

Description

Pasternack's PE45170 10-32 male connector with crimp/solder attachment for RG188-DS and RG316-DS is part of our full line of RF components available for same-day shipping. Our 10-32 male connector operates up to a maximum frequency of 2 GHz and offers good VSWR of 1.3:1.

Our 10-32 male connector PE45170 datasheet specifications and drawing with dimensions are shown below in this PDF. Pasternack's broad catalog of RF, microwave and millimeter wave connectors allows designers to configure and customize their signal connections however they like. Whether the need is to provide an I/O for a board design, or simply create a custom cable assembly configuration, Pasternack has the right connector for the job. Pasternack can also expertly build your custom cable assemblies for you and ship same-day.

Electrical Specifications

Description	Minimum	Typical	Maximum	Units
Frequency Range	DC		2	GHz
VSWR			1.3:1	
Operating Voltage (AC)			335	Vrms
Dielectric Withstanding Voltage (AC)			750	Vrms

Mechanical Specifications

Size	
Length	1.25 in [31.75 mm]
Width/Dia.	0.26 in [6.60 mm]
Weight	0.011 lbs [4.99 g]
Mating Torque	3 in-lbs 0.34 Nm

Click the following link (or enter part number in "SEARCH" on website) to obtain additional part information including price, inventory and certifications: 10-32 Male Connector Crimp/Solder Attachment for RG188-DS, RG316-DS PE45170

Pasternack Enterprises, Inc. • P.O. Box 16759, Irvine, CA 92623
Phone: (866) 727-8376 or (949) 261-1920 • **Fax:** (949) 261-7451
Sales@Pasternack.com • Techsupport@Pasternack.com

© 2017 Pasternack Enterprises All Rights Reserved

10-32 Male Connector Crimp/Solder Attachment for RG188-DS, RG316-DS

Material Specifications

Description	Material	Plating
Contact	Brass	Gold 30µ in. minimum
Insulation	Teflon	
Body	Brass	Nickel 100µ in. minimum
Coupling Nut	Brass	Nickel 100µ in. minimum

Environmental Specifications

Temperature

Operating Range -65 to +125 deg C

Compliance Certifications (see product page for current document)

Plotted and Other Data

Notes:

10-32 Male Connector Crimp/Solder Attachment for RG188-DS, RG316-DS from Pasternack Enterprises has same day shipment for domestic and International orders. Our RF, microwave and millimeter wave products maintain a 99.4% availability and are part of the broadest selection in the industry.

Click the following link (or enter part number in "SEARCH" on website) to obtain additional part information including price, inventory and certifications: 10-32 Male Connector Crimp/Solder Attachment for RG188-DS, RG316-DS PE45170

URL: https://www.pasternack.com/10-32-male-rg188-ds-rg316-ds-connector-pe45170-p.aspx

The information contained in this document is accurate to the best of our knowledge and representative of the part described herein. It may be necessary to make modifications to the part and/or the documentation of the part, in order to implement improvements. Pasternack reserves the right to make such changes as required. Unless otherwise stated, all specifications are nominal. Pasternack does not make any representation or warranty regarding the suitability of the part described herein for any particular purpose, and Pasternack does not assume any liability arising out of the use of any part or documentation.

Pasternack Enterprises, Inc. • P.O. Box 16759, Irvine, CA 92623
Phone: (866) 727-8376 or (949) 261-1920 • **Fax:** (949) 261-7451
Sales@Pasternack.com • Techsupport@Pasternack.com

© 2017 Pasternack Enterprises All Rights Reserved

PE45170 CAD Drawing

10-32 Male Connector Crimp/Solder Attachment for RG188-DS, RG316-DS

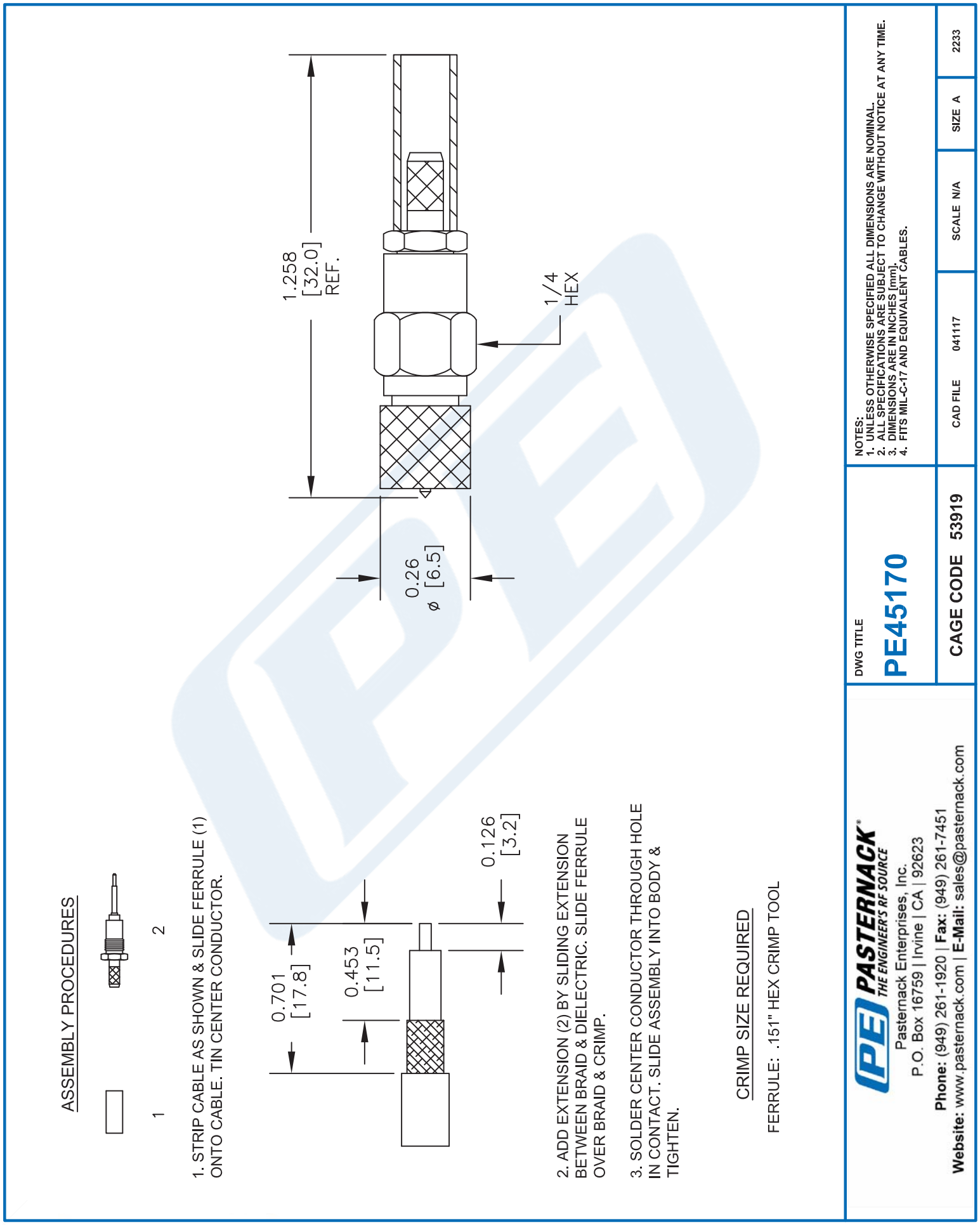

© 2017 Pasternack Enterprises All Rights Reserved

PASTERNACK®
THE ENGINEER'S RF SOURCE

N Male Connector Crimp/Solder Attachment for RG188-DS, RG316-DS

TECHNICAL DATA SHEET PE45167

Configuration

Connector	N Male
Connector Specification	MIL-STD-348A
Connector Interface Type	RG188-DS, RG316-DS
Attachment Method (Shield/Contact)	Crimp/Solder
Body Style	Straight

Electrical Specifications

Frequency Range	DC to 1,000 MHz
Impedance	50 Ohms
Maximum VSWR	1.5:1
Maximum Operating Voltage	1,000 Volts

Mechanical Specifications

Temperature

Operating Range	-65 to +165 deg C

Size

Length	1.304 in [33.12 mm]
Width/Dia.	0.8 in [20.32 mm]
Weight	0.068 lbs [30.84 g]

Connector

Type	N Male
Contact Material and Plating	Brass, Gold
Contact Plating Specification	30µ in. minimum
Coupling Nut Material and Plating	Brass, Nickel
Coupling Nut Plating Specification	100µ in. minimum
Body Material and Plating	Brass, Nickel
Body Plating Specification	100µ in. minimum
Dielectric Type	Teflon

Compliance Certifications (visit www.Pasternack.com for current document)

RoHS Compliant	
REACH Compliant	06/18/2012

Click the following link (or enter part number in "SEARCH" on website) to obtain additional part information including price, inventory and certifications: N Male Connector Crimp/Solder Attachment for RG188-DS, RG316-DS PE45167

Pasternack Enterprises, Inc. • P.O. Box 16759, Irvine, CA 92623
Phone: (866) 727-8376 or (949) 261-1920 • **Fax:** (949) 261-7451
Sales@Pasternack.com • Techsupport@Pasternack.com

© 2015 Pasternack Enterprises All Rights Reserved

N Male Connector Crimp/Solder Attachment for RG188-DS, RG316-DS

Plotted and Other Data

Notes:

- Values at +25 °C, sea level

N Male Connector Crimp/Solder Attachment for RG188-DS, RG316-DS from Pasternack Enterprises has same day shipment for domestic and International orders. Our RF, microwave and millimeter wave products maintain a 99% availability and are part of the broadest selection in the industry.

Click the following link (or enter part number in "SEARCH" on website) to obtain additional part information including price, inventory and certifications: N Male Connector Crimp/Solder Attachment for RG188-DS, RG316-DS PE45167

URL: http://www.pasternack.com/n-male-rg188-ds-rg316-ds-connector-pe45167-p.aspx

The information contained in this document is accurate to the best of our knowledge and representative of the part described herein. It may be necessary to make modifications to the part and/or the documentation of the part, in order to implement improvements. Pasternack reserves the right to make such changes as required. Unless otherwise stated, all specifications are nominal. Pasternack does not make any representation or warranty regarding the suitability of the part described herein for any particular purpose, and Pasternack does not assume any liability arising out of the use of any part or documentation.

Pasternack Enterprises, Inc. • P.O. Box 16759, Irvine, CA 92623
Phone: (866) 727-8376 or (949) 261-1920 • **Fax:** (949) 261-7451
Sales@Pasternack.com • Techsupport@Pasternack.com

© 2015 Pasternack Enterprises All Rights Reserved

PE45167 CAD Drawing

N Male Connector Crimp/Solder Attachment for RG188-DS, RG316-DS

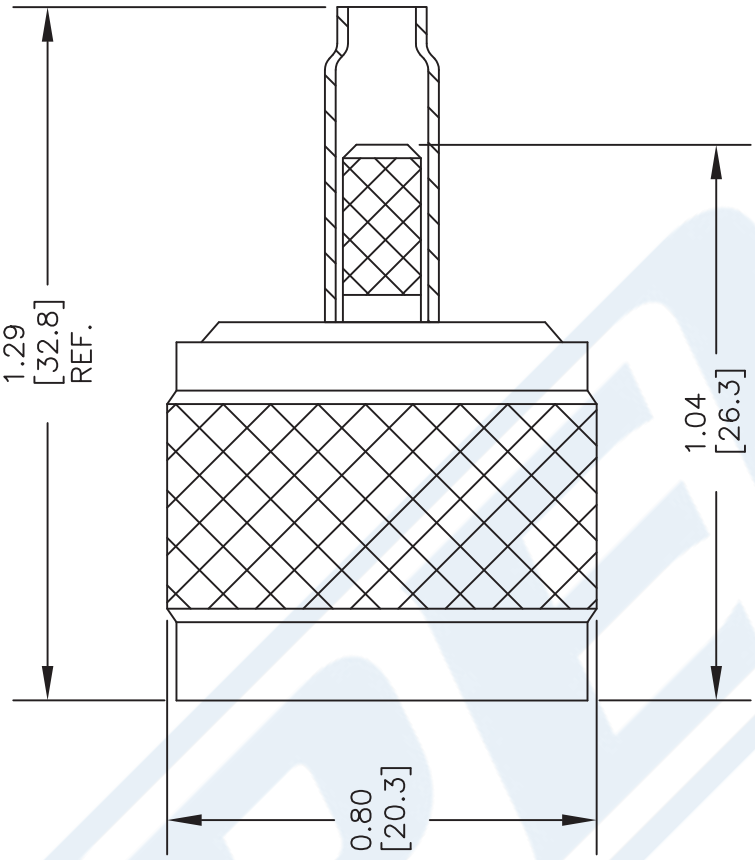

ASSEMBLY PROCEDURES

1. STRIP CABLE AS SHOWN & SLIDE FERRULE (1) ONTO CABLE.
2. FLARE END OF CABLE BRAID & SLIDE METAL SPACER (2) & PTFE (3) SPACER OVER CABLE DIELECTRIC.

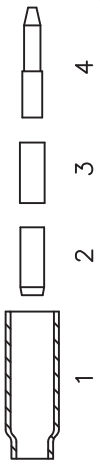

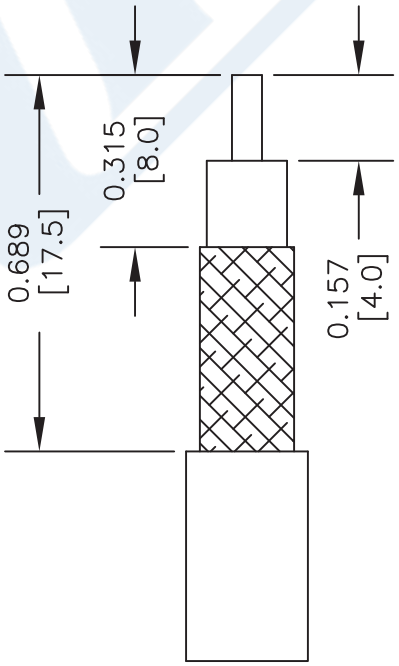

STRIPPING DIMENSIONS

3. THE CONTACT (4) SHOULD BUTT AGAINST THE DIELECTRIC & PTFE SPACER. CRIMP CONTACT TO CABLE CENTER CONDUCTOR.
4. INSTALL CABLE ASSEMBLY INTO BODY SO THAT THE INNER FERRULE PORTION OF BODY SLIDES UNDER BRAID. PUSH CABLE ASSEMBLY FORWARD INTO BODY. SLIDE FERRULE OVER BRAID & UP AGAINST BODY. CRIMP FERRULE.

CRIMP SIZE REQUIRED

CONTACT: .068" HEX CRIMP TOOL
FERRULE: .178" HEX CRIMP TOOL

NOTES:
1. UNLESS OTHERWISE SPECIFIED ALL DIMENSIONS ARE NOMINAL.
2. ALL SPECIFICATIONS ARE SUBJECT TO CHANGE WITHOUT NOTICE AT ANY TIME.
3. DIMENSIONS ARE IN INCHES [mm].
4. FITS MIL-C-17 AND EQUIVALENT CABLES.

DWG TITLE
PE45167

CAD FILE	031815	SCALE N/A	SIZE A	2233

FSCM NO. 53919

PASTERNACK® THE ENGINEER'S RF SOURCE
Pasternack Enterprises, Inc.
P.O. Box 16759 | Irvine | CA | 92623
Phone: (949) 261-1920 | **Fax:** (949) 261-7451
Website: www.pasternack.com | **E-Mail:** sales@pasternack.com

© 2015 Pasternack Enterprises All Rights Reserved

PASTERNACK®
www.pasternack.com

Flexible RG316 Coax Cable Double Shielded with Tan FEP Jacket

TECHNICAL DATA SHEET RG316-DS

Flexible RG316 Coax Cable Double Shielded with Tan FEP Jacket

Configuration

Inner Conductor Material and Plating	Copper Clad Steel, Silver
Dielectric Type	PTFE
Shield Materials	Silver Plated Copper Braid, Silver Plated Copper Braid
Jacket Material and Color	FEP, Tan

Electrical Specifications

Impedance, Ohms	50
Velocity of Propagation, %	70
Maximum Operating Frequency, GHz	3
Capacitance, pF/ft [pF/m]	29.4 [96.46]
Maximum Operating Voltage, Volts	1,200

Electrical Specifications by Frequency

Frequency 1

Frequency, MHz	100
Attenuation, dB/100ft [dB/100m]	8 [26.25]

Frequency 2

Frequency, MHz	400
Attenuation, dB/100ft [dB/100m]	16.2 [53.15]

Frequency 3

Frequency, MHz	1000
Attenuation, dB/100ft [dB/100m]	26.1 [85.63]

Frequency 4

Frequency, GHz	3
Attenuation, dB/100ft [dB/100m]	46.7 [153.22]

Mechanical Specifications

Temperature

Operating Range, deg C	-55 to +200

Inner Conductor

Number of Strands	7
Material	Copper Clad Steel
Plating	Silver
Diameter, in [mm]	0.02 [0.51]

Click the following link (or enter part number in “SEARCH” on website) to obtain additional part information including price, inventory and certifications: Flexible RG316 Coax Cable Double Shielded with Tan FEP Jacket RG316-DS

The information contained in this document is accurate to the best of our knowledge and representative of the part described herein. It may be necessary to make modifications to the part and/or the documentation of the part, in order to implement improvements. Pasternack reserves the right to make such changes as required. Unless otherwise stated, all specifications are nominal.

Pasternack Enterprises, Inc. • P.O. Box 16759, Irvine, CA 92623
Phone: (866) 727-8376 or (949) 261-1920 • **Fax:** (949) 261-7451
Sales@Pasternack.com • Techsupport@Pasternack.com

© 2013 Pasternack Enterprises All Rights Reserved

Flexible RG316 Coax Cable Double Shielded with Tan FEP Jacket

Dielectric:	
Type	PTFE
Diameter, in [mm]	0.06 [1.52]
Shield:	
Number of	2
Material 1	Silver Plated Copper Braid
Material 2	Silver Plated Copper Braid
Diameter, in [mm]	0.096 [2.44]
Jacket:	
Material	FEP
Diameter, in [mm]	0.114 [2.9]
Color	Tan
One Time Minimum Bend Radius, in [mm]	0.59 [14.99]
Weight, lbs/ft [Kg/m]	0.016 [0.02]

Compliance Certifications (visit www.Pasternack.com for current document)

RoHS Compliant	Yes

Plotted and Other Data

Notes:	Values at 25 °C, sea level

Flexible RG316 Coax Cable Double Shielded with Tan FEP Jacket from Pasternack Enterprises has same day shipment for domestic and International orders. Our RF, microwave and fiber optic products maintain a 99% availability and are part of the broadest selection in the industry.

Click the following link (or enter part number in “SEARCH” on website) to obtain additional part information including price, inventory and certifications: Flexible RG316 Coax Cable Double Shielded with Tan FEP Jacket RG316-DS

URL: http://www.pasternack.com/flexible-0.114-rg316-ds-50-ohm-coax-cable-fep-jacket-rg316-ds-p.aspx

The information contained in this document is accurate to the best of our knowledge and representative of the part described herein. It may be necessary to make modifications to the part and/or the documentation of the part, in order to implement improvements. Pasternack reserves the right to make such changes as required. Unless otherwise stated, all specifications are nominal.

Pasternack Enterprises, Inc. • P.O. Box 16759, Irvine, CA 92623
Phone: (866) 727-8376 or (949) 261-1920 • **Fax:** (949) 261-7451
Sales@Pasternack.com • Techsupport@Pasternack.com

© 2013 Pasternack Enterprises All Rights Reserved

RG316-DS CAD Drawing

Flexible RG316 Coax Cable Double Shielded with Tan FEP Jacket

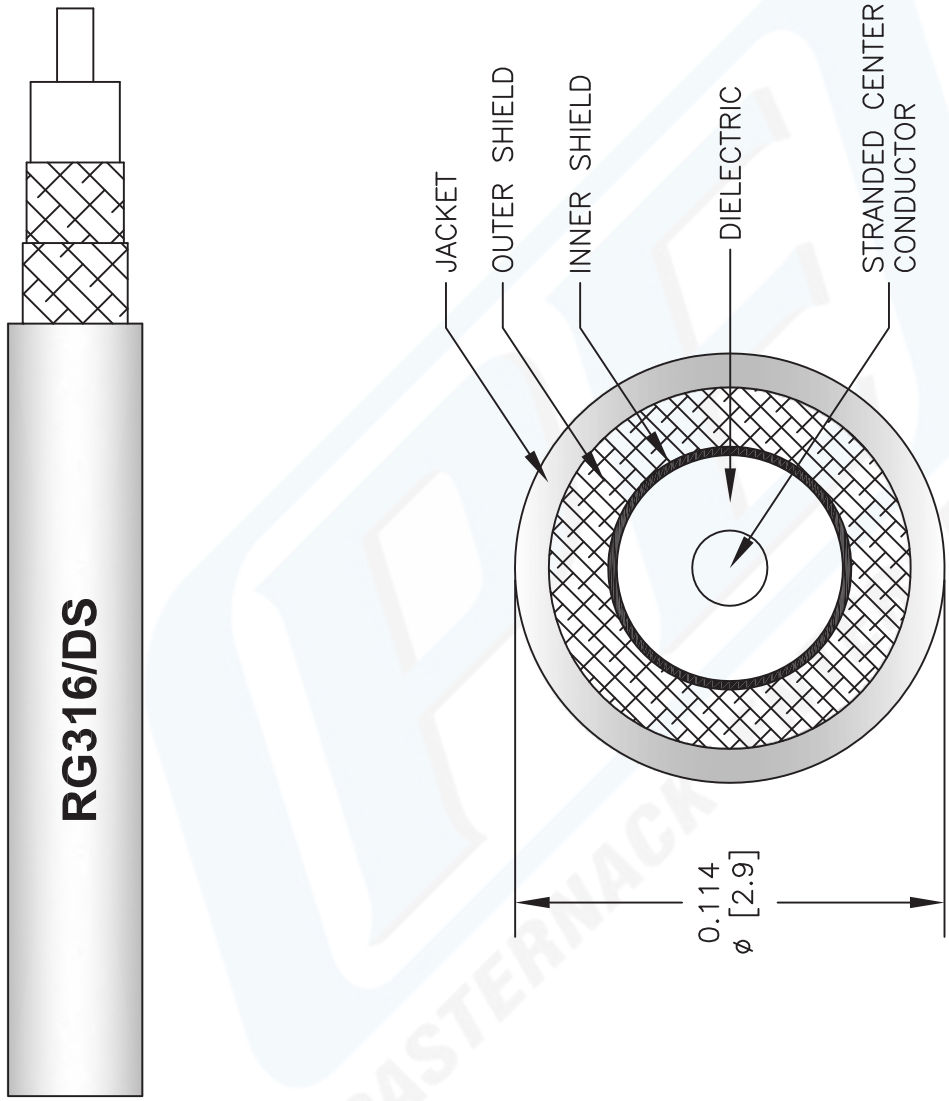

NOTES:
1. UNLESS OTHERWISE SPECIFIED ALL DIMENSIONS ARE NOMINAL.
2. ALL SPECIFICATIONS ARE SUBJECT TO CHANGE WITHOUT NOTICE AT ANY TIME.
3. DIMENSIONS ARE IN INCHES [mm].

DWG TITLE
RG316-DS

FSCM NO. 53919

CAD FILE 041812-B | SCALE N/A | SIZE A | 2233

PASTERNACK®
Pasternack Enterprises, Inc.
P.O. Box 16759 | Irvine | CA | 92623
Phone: (949) 261-1920 | **Fax:** (949) 261-7451
Website: www.pasternack.com | **E-Mail:** sales@pasternack.com

© 2013 Pasternack Enterprises All Rights Reserved