PASTERNACK®
THE ENGINEER'S RF SOURCE

# MMCX Plug Right Angle Connector Crimp/ Solder Attachment For RG316-DS

## TECHNICAL DATA SHEET PE44784

### Configuration

| | |
|---|---|
| Connector | MMCX Plug |
| Connector Specification | BS EN 122340 |
| Connector Interface Type | RG316-DS |
| Cable Attachment Method (Shield/Contact) | Crimp/Solder |
| Body Style | Right Angle |

### Electrical Specifications

| | |
|---|---|
| Frequency Range, GHz | DC to 6 |
| Impedance, Ohms | 50 |
| Maximum VSWR | 1.35:1 |
| Maximum Operating Voltage, Volts | 250 |

### Mechanical Specifications

**Temperature**

| | |
|---|---|
| Operating Range, deg C | -55 to +155 |

**Size**

| | |
|---|---|
| Length, in [mm] | 0.53 [13.46] |
| Width/Dia., in [mm] | 0.28 [7.11] |
| Weight, lbs [g] | 0.003 [1.36] |

**Connector**

| | |
|---|---|
| Type | MMCX Plug |
| Contact Material and Plating | Brass, Gold |
| Contact Plating Specification | 30µ in. minimum |
| Body Material and Plating | Brass, Gold |
| Body Plating Specification | 3µ in. minimum |
| Dielectric Type | Teflon |

### Compliance Certifications (visit www.Pasternack.com for current document)

| | |
|---|---|
| RoHS Compliant | Yes |

Click the following link (or enter part number in "SEARCH" on website) to obtain additional part information including price, inventory and certifications: MMCX Plug Right Angle Connector Crimp/Solder Attachment For RG316-DS PE44784

The information contained in this document is accurate to the best of our knowledge and representative of the part described herein. It may be necessary to make modifications to the part and/or the documentation of the part, in order to implement improvements. Pasternack reserves the right to make such changes as required. Unless otherwise stated, all specifications are nominal.

Pasternack Enterprises, Inc. • P.O. Box 16759, Irvine, CA 92623
**Phone:** (866) 727-8376 or (949) 261-1920 • **Fax:** (949) 261-7451
Sales@Pasternack.com • Techsupport@Pasternack.com

© 2014 Pasternack Enterprises All Rights Reserved

# MMCX Plug Right Angle Connector Crimp/ Solder Attachment For RG316-DS



**Plotted and Other Data**

Notes: Values at 25 °C, sea level

MMCX Plug Right Angle Connector Crimp/Solder Attachment For RG316-DS from Pasternack Enterprises has same day shipment for domestic and International orders. Our RF, microwave and fiber optic products maintain a 99% availability and are part of the broadest selection in the industry.

Click the following link (or enter part number in "SEARCH" on website) to obtain additional part information including price, inventory and certifications: MMCX Plug Right Angle Connector Crimp/Solder Attachment For RG316-DS PE44784

URL: http://www.pasternack.com/mmcx-plug-standard-rg316-ds-connector-pe44784-p.aspx

The information contained in this document is accurate to the best of our knowledge and representative of the part described herein. It may be necessary to make modifications to the part and/or the documentation of the part, in order to implement improvements. Pasternack reserves the right to make such changes as required. Unless otherwise stated, all specifications are nominal.

Pasternack Enterprises, Inc. • P.O. Box 16759, Irvine, CA 92623
**Phone:** (866) 727-8376 or (949) 261-1920 • **Fax:** (949) 261-7451
Sales@Pasternack.com • Techsupport@Pasternack.com

© 2014 Pasternack Enterprises All Rights Reserved

# PE44784 CAD Drawing

MMCX Plug Right Angle Connector Crimp/Solder Attachment For RG316-DS

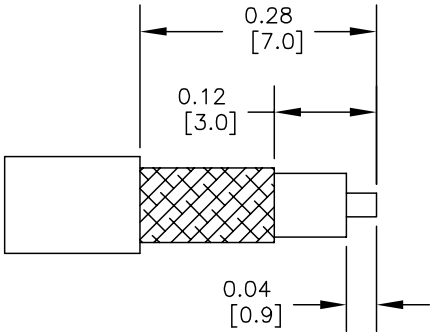


STRIPPING DIMENSIONS

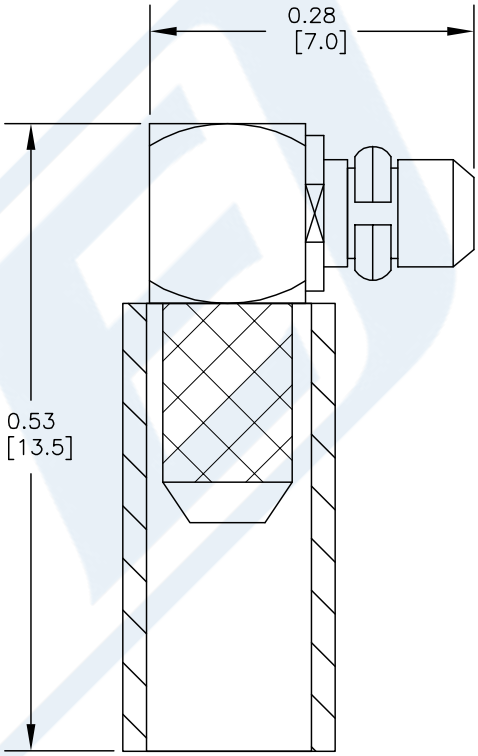


ASSEMBLY PROCEDURES

1. STRIP CABLE AS SHOWN. SLIDE FERRULE OVER CABLE.
2. INSTALL CABLE INTO BODY OF CONNECTOR AND SOFT SOLDER CENTER CONDUCTOR IN PLACE.
3. CRIMP FERRULE & PRESS CAP DOWN.

CRIMP SIZE REQUIRED

FERRULE: .128" HEX CRIMP TOOL

PASTERNACK® THE ENGINEER'S RF SOURCE
Pasternack Enterprises, Inc.
P.O. Box 16759 | Irvine | CA | 92623
**Phone:** (949) 261-1920 | **Fax:** (949) 261-7451
**Website:** www.pasternack.com | **E-Mail:** sales@pasternack.com

DWG TITLE

**PE44784**

NOTES:
1. UNLESS OTHERWISE SPECIFIED ALL DIMENSIONS ARE NOMINAL.
2. ALL SPECIFICATIONS ARE SUBJECT TO CHANGE WITHOUT NOTICE AT ANY TIME.
3. DIMENSIONS ARE IN INCHES [mm].
4. FITS MIL-C-17 AND EQUIVALENT CABLES.

| FSCM NO. 53919 | CAD FILE 021814 | SCALE N/A | SIZE A | 2233 |
|---|---|---|---|---|

© 2014 Pasternack Enterprises All Rights Reserved

PASTERNACK
an INFINITE brand

# MCX Jack Connector Crimp/Solder Attachment for RG188-DS, RG316-DS

RF Connectors
Technical Data Sheet

PE4885

## Configuration

- MCX Jack Connector
- 50 Ohms
- Straight Body Geometry
- RG188-DS, RG316-DS Interface Type
- Crimp/Solder Attachment

## Applications

- General Purpose Test
- Custom Cable Assemblies

### Description

Pasternack's PE4885 MCX jack connector with crimp/solder attachment for RG188-DS and RG316-DS is part of our full line of RF components available for same-day shipping.

Our MCX jack connector PE4885 datasheet specifications and drawing with dimensions are shown below in this PDF. Pasternack's broad catalog of RF, microwave and millimeter wave connectors allows designers to configure and customize their signal connections however they like. Whether the need is to provide an I/O for a board design, or simply create a custom cable assembly configuration, Pasternack has the right connector for the job. Pasternack can also expertly build your custom cable assemblies for you and ship same-day.

### Mechanical Specifications

Weight 0.006 lbs [2.72 g]

#### Material Specifications

| Description | Material | Plating |
|---|---|---|
| Body | Brass | Nickel |

### Environmental Specifications

### Compliance Certifications (see product page for current document)

### Plotted and Other Data

Notes:

Click the following link (or enter part number in "SEARCH" on website) to obtain additional part information including price, inventory and certifications: MCX Jack Connector Crimp/Solder Attachment for RG188-DS, RG316-DS PE4885

Pasternack Enterprises, Inc. • P.O. Box 16759, Irvine, CA 92623
**Phone:** (866) 727-8376 or (949) 261-1920 • **Fax:** (949) 261-7451
Sales@Pasternack.com • Techsupport@Pasternack.com

© 2019 Pasternack Enterprises All Rights Reserved

# MCX Jack Connector Crimp/Solder Attachment for RG188-DS, RG316-DS

## RF Connectors
## Technical Data Sheet

PE4885

MCX Jack Connector Crimp/Solder Attachment for RG188-DS, RG316-DS from Pasternack Enterprises has same day shipment for domestic and International orders. Our RF, microwave and millimeter wave products maintain a 99.4% availability and are part of the broadest selection in the industry.

Click the following link (or enter part number in “SEARCH” on website) to obtain additional part information including price, inventory and certifications: MCX Jack Connector Crimp/Solder Attachment for RG188-DS, RG316-DS PE4885

URL: https://www.pasternack.com/mcx-jack-rg188-ds-rg316-ds-connector-pe4885-p.aspx

The information contained in this document is accurate to the best of our knowledge and representative of the part described herein. It may be necessary to make modifications to the part and/or the documentation of the part, in order to implement improvements. Pasternack reserves the right to make such changes as required. Unless otherwise stated, all specifications are nominal. Pasternack does not make any representation or warranty regarding the suitability of the part described herein for any particular purpose, and Pasternack does not assume any liability arising out of the use of any part or documentation.

Pasternack Enterprises, Inc. • P.O. Box 16759, Irvine, CA 92623
**Phone:** (866) 727-8376 or (949) 261-1920 • **Fax:** (949) 261-7451
Sales@Pasternack.com • Techsupport@Pasternack.com

© 2019 Pasternack Enterprises All Rights Reserved

# PE4885 CAD Drawing

MCX Jack Connector Crimp/Solder Attachment for RG188-DS, RG316-DS

REVISIONS

| REV. | DESCRIPTION | DATE | APPROVED |
|---|---|---|---|
| 1.1 | PCR PE4885 20190418 | 04/27/19 | J.GARCIA |

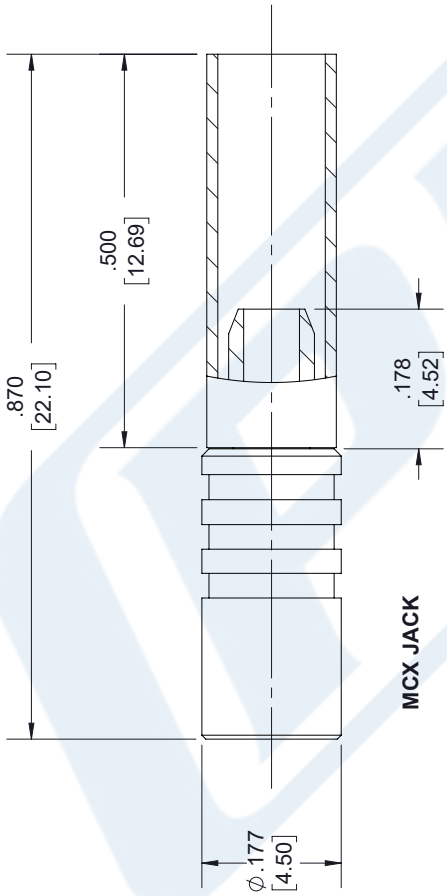


MCX JACK

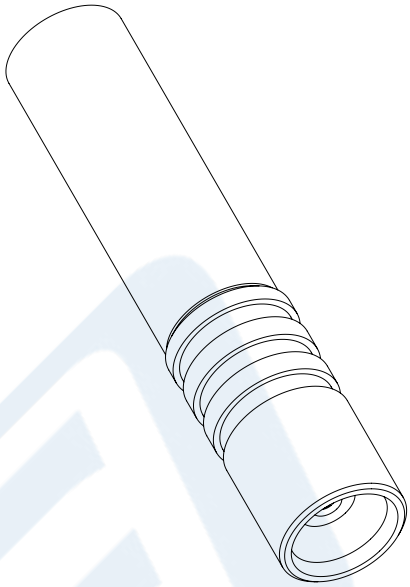

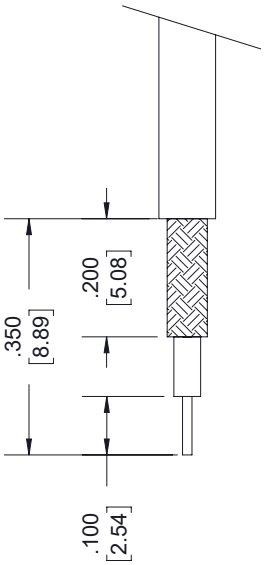


STRIPPING DIMENSIONS

NOTES:

1. CABLE ATTACHMENT:
   - OUTER: CRIMP.
   - INNER: SOLDER.
2. CRIMP SIZE REQUIRED:
   - FERRULE: .151 [3.84] HEX. CRIMP TOOL.
   - CONTACT: SOLDER.

THESE COMMODITIES, TECHNOLOGY OR SOFTWARE WERE EXPORTED FROM THE UNITED STATES IN ACCORDANCE WITH THE EXPORT ADMINISTRATION REGULATIONS. DIVERSION CONTRARY TO U.S. LAW PROHIBITED.

UNLESS OTHERWISE SPECIFIED
LEADING DIMENSIONS ARE INCHES
DIMENSIONS IN [ ] ARE MILLIMETERS

TOLERANCES:

.X± .2 [5.08] | FRACTIONS ± 1/32
.XX± .01 [.25] | ANGLES ± 1°
.XXX± .005 [.13]

ALL DIMENSIONS SHOWN ARE FOR REFERENCE ONLY.

THIRD-ANGLE PROJECTION

PASTERNACK
an INFINITE brand


Pasternack Enterprises, Inc.
P.O.Box 16759, Irvine, CA 92623.
Phone: 1.949.261.1920 | 1.866.727.8376
Fax: 1.949.261.7451
www.pasternack.com | e-mail: sales@pasternack.com



THE INFORMATION AND DESIGN IN THIS DOCUMENT IS THE PROPERTY OF PASTERNACK CORPORATION. ALL RIGHTS RESERVED.


| SIZE | CAGE | DRAWN BY | PART NUMBER | REV |
|---|---|---|---|---|
| A | 53919 | K.DANG | PE4885 | 1.1 |

SHEET 1 OF 1 | SCALE N/A

T-Rev B

# Flexible RG316-DS Coax Cable Double Shielded with Tan FEP Jacket

RF Cables
Technical Data Sheet

RG316-DS

## Configuration

- Flexible Cable
- 2 Shield(s)

### Electrical Specifications

| Description | Minimum | Typical | Maximum | Units |
|---|---|---|---|---|
| Frequency Range | DC | | 3 | GHz |
| Impedance | | 50 | | Ohms |
| Velocity of Propagation | | 70 | | % |
| Operating Voltage (AC) | | | 1,200 | Vrms |
| Nominal Capacitance | | 29.4 [96.46] | | pF/ft [pF/m] |

### Performance by Frequency Band

| Description | F1 | F2 | F3 | F4 | F5 | Units |
|---|---|---|---|---|---|---|
| Frequency | 0.1 | 0.4 | 1 | 3 | | GHz |
| Attenuation, Typ | 11.5 | 17.2 | 30 | 54.5 | | dB/100ft |
| | 37.73 | 56.43 | 98.43 | 178.81 | | dB/100m |
| Input Power (CW), Max | 430 | 210 | 130 | | | Watts |

### Mechanical Specifications

| | |
|---|---|
| Diameter | 0.114 in [2.9 mm] |
| Weight | 0.015 lbs/ft [0.02 Kg/m] |
| Min. Bend Radius (Repeated) | 0.591 in [15.01 mm] |

### Construction Specifications

| Description | Material and Plating | Diameter |
|---|---|---|
| Inner Conductor | Copper Clad Steel, Silver7 | 0.02 in 0.51 mm |
| Conductor Type | Stranded | |
| Dielectric | PTFE | 0.06 in 1.52 mm |
| First Shield | Silver Plated Copper Braid | |

Click the following link (or enter part number in “SEARCH” on website) to obtain additional part information including price, inventory and certifications: Flexible RG316-DS Coax Cable Double Shielded with Tan FEP Jacket RG316-DS

Pasternack Enterprises, Inc. • P.O. Box 16759, Irvine, CA 92623
**Phone:** (866) 727-8376 or (949) 261-1920 • **Fax:** (949) 261-7451
Sales@Pasternack.com • Techsupport@Pasternack.com

© 2018 Pasternack Enterprises All Rights Reserved

| | | |
|---|---|---|
| Second Shield | Silver Plated Copper Braid | 0.094 in 2.39 mm |
| Jacket | FEP, Tan | 0.114 in [2.9 mm] |

## Environmental Specifications

**Temperature**

Operating Range -55 to +200 deg C

**Compliance Certifications** (see product page for current document)

## Plotted and Other Data

Notes:

Flexible RG316-DS Coax Cable Double Shielded with Tan FEP Jacket from Pasternack Enterprises has same day shipment for domestic and International orders. Our RF, microwave and millimeter wave products maintain a 99.4% availability and are part of the broadest selection in the industry.

Click the following link (or enter part number in "SEARCH" on website) to obtain additional part information including price, inventory and certifications: Flexible RG316-DS Coax Cable Double Shielded with Tan FEP Jacket RG316-DS

URL: https://www.pasternack.com/flexible-0.114-rg316-ds-50-ohm-coax-cable-fep-jacket-rg316-ds-p.aspx

The information contained in this document is accurate to the best of our knowledge and representative of the part described herein. It may be necessary to make modifications to the part and/or the documentation of the part, in order to implement improvements. Pasternack reserves the right to make such changes as required. Unless otherwise stated, all specifications are nominal. Pasternack does not make any representation or warranty regarding the suitability of the part described herein for any particular purpose, and Pasternack does not assume any liability arising out of the use of any part or documentation.

Pasternack Enterprises, Inc. • P.O. Box 16759, Irvine, CA 92623
**Phone:** (866) 727-8376 or (949) 261-1920 • **Fax:** (949) 261-7451
Sales@Pasternack.com • Techsupport@Pasternack.com

© 2018 Pasternack Enterprises All Rights Reserved

# RG316-DS CAD Drawing

Flexible RG316-DS Coax Cable Double Shielded with Tan FEP Jacket

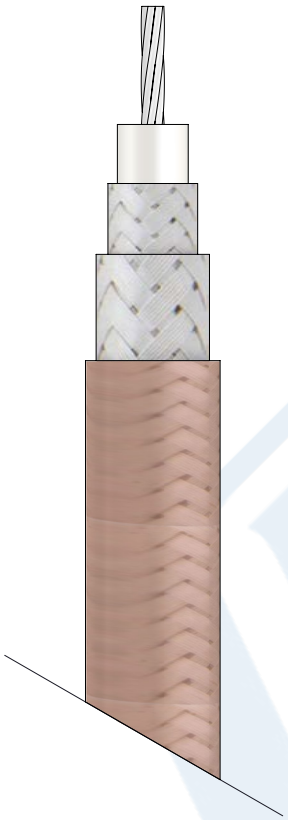

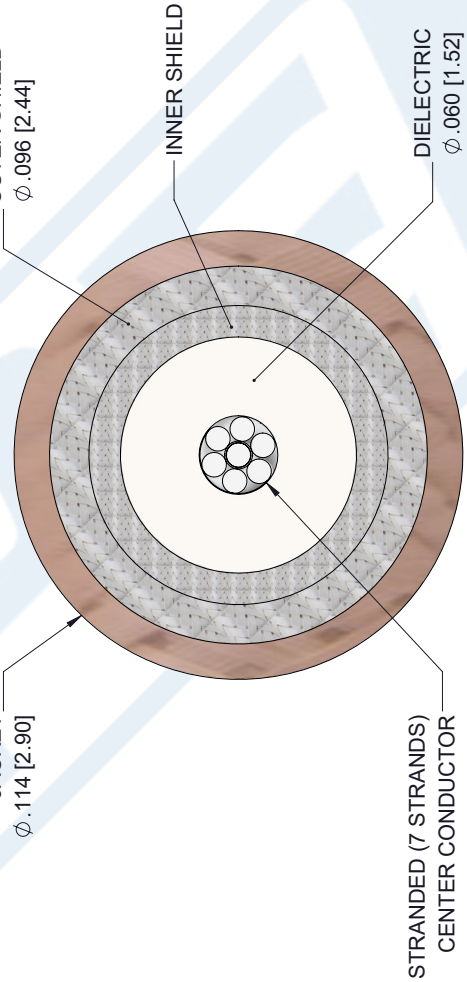


SECTION VIEW

REVISIONS

| REV. | DESCRIPTION | DATE | APPROVED |
|---|---|---|---|
| 1.1 | PCR RG316-DS 20190701 | 07/15/19 | S.ELLIS |

UNLESS OTHERWISE SPECIFIED LEADING DIMENSIONS ARE INCHES DIMENSIONS IN [ ] ARE MILLIMETERS

TOLERANCES:

.X=± .2 [5.08] | FRACTIONS ± 1/32
.XX=± .01 [ .25 ] | ANGLES ± 1°
.XXX=± .005 [ .13 ]

ALL DIMENSIONS SHOWN ARE FOR REFERENCE ONLY.

THIRD-ANGLE PROJECTION

PASTERNACK an INFINITE brand

Pasternack Enterprises, Inc.
P.O.Box 16759, Irvine, CA 92623.
Phone: 1.949.261.1920 | 1.866.727.8376
Fax: 1.949.261.7451
www.pasternack.com | e-mail: sales@pasternack.com

THE INFORMATION AND DESIGN IN THIS DOCUMENT IS THE PROPERTY OF PASTERNACK CORPORATION. ALL RIGHTS RESERVED.

| SIZE | CAGE | DRAWN BY | PART NUMBER | REV |
|---|---|---|---|---|
| A | 53919 | K.Dang | RG316-DS | A |

SHEET 1 OF 1

SCALE N/A

THESE COMMODITIES, TECHNOLOGY OR SOFTWARE WERE EXPORTED FROM THE UNITED STATES IN ACCORDANCE WITH THE EXPORT ADMINISTRATION REGULATIONS. DIVERSION CONTRARY TO U.S. LAW PROHIBITED.

T-Rev B

© 2018 Pasternack Enterprises All Rights Reserved