2.92mm Male Precision Connector Clamp/Solder Attachment for PE-SR405AL, PE-SR405FL, PE-SR405FLJ, PE-SR405TN, RG405

RF Connectors Technical Data Sheet PE44796

Configuration

- 2.92mm Male Connector
- 50 Ohms
- Straight Body Geometry
- PE-SR405AL, PE-SR405FL, PE-SR405FLJ, PE-SR405TN, RG405 Interface Type
- Clamp/Solder Attachment
- 5/16 inch Hex
- Precision Design

Features

- Max. Operating Frequency 40 GHz
- Excellent VSWR of 1.18:1
- Gold over Nickel Plated Beryllium Copper Contact
- 50 µin minimum contact plating

Applications

- General Purpose Test
- Precision Test & Measurement
- Custom Cable Assemblies

Description

Pasternack's PE44796 2.92mm male precision connector with clamp/solder attachment for PE-SR405AL, PE-SR405FL, PE-SR405FLJ, PE-SR405TN and RG405 is part of our full line of RF components available for same-day shipping. Our 2.92mm male connector operates up to a maximum frequency of 40 GHz and offers excellent VSWR of 1.18:1.

Our 2.92mm male connector PE44796 datasheet specifications and drawing with dimensions are shown below in this PDF. Pasternack's broad catalog of RF, microwave and millimeter wave connectors allows designers to configure and customize their signal connections however they like. Whether the need is to provide an I/O for a board design, or simply create a custom cable assembly configuration, Pasternack has the right connector for the job. Pasternack can also expertly build your custom cable assemblies for you and ship same-day.

Electrical Specifications

Description	Minimum	Typical	Maximum	Units
Frequency Range	DC		40	GHz
VSWR			1.18:1	
Insertion Loss			0.26	dB
Operating Voltage (AC)			170	Vrms
Dielectric Withstanding Voltage (AC)			500	Vrms
High Potential Voltage 5 to 7.5 MHz			325	Vrms
Corona Discharge at 70,000 ft			125	Vrms
Insulation Resistance	5,000			MOhms

Click the following link (or enter part number in "SEARCH" on website) to obtain additional part information including price, inventory and certifications: 2.92mm Male Precision Connector Clamp/Solder Attachment for PE-SR405AL, PE-SR405FL, PE-SR405FLJ, PE-SR405TN, RG405 PE44796

Pasternack Enterprises, Inc. • P.O. Box 16759, Irvine, CA 92623
Phone: (866) 727-8376 or (949) 261-1920 • **Fax:** (949) 261-7451
Sales@Pasternack.com • Techsupport@Pasternack.com

© 2016 Pasternack Enterprises All Rights Reserved

2.92mm Male Precision Connector Clamp/Solder Attachment for PE-SR405AL, PE-SR405FL, PE-SR405FLJ, PE-SR405TN, RG405

Performance by Frequency

Description	F1	F2	F3	F4	F5	Units
Frequency Range	DC to 18	18 to 26.5	26.5 to 40			GHz
VSWR, Max	1.12:1	1.14:1	1.18:1			

Electrical Specification Notes:
Insertion loss: 0.04 x sqrt(fGHz) dB max.

Mechanical Specifications

Size

Length	0.813 in [20.65 mm]
Width/Dia.	0.315 in [8.00 mm]
Weight	0.014 lbs [6.35 g]
Mating Cycles	500 Cycles
Mating Torque	8 to 10 in-lbs [0.90 to 1.13 Nm]

Material Specifications

Description	Material	Plating
Contact	Beryllium Copper	Gold over Nickel 50 µin minimum
Insulation	PCTFE	
Body	Passivated Stainless Steel	SAE-AMS-2700
Coupling Nut	Passivated Stainless Steel	SAE-AMS-2700

Environmental Specifications

Temperature

Operating Range	-65 to +165 deg C
Humidity	MIL-STD-202, Method 106, No Vibration
Shock	MIL-STD-202, Method 213, Condition I
Vibration	MIL-STD-202, Method 204, Condition D
Thermal Shock	MIL-STD-202, Method 107, Condition B
Salt Spray	MIL-STD-202, Method 101, Condition B (5%)

Click the following link (or enter part number in "SEARCH" on website) to obtain additional part information including price, inventory and certifications: 2.92mm Male Precision Connector Clamp/Solder Attachment for PE-SR405AL, PE-SR405FL, PE-SR405FLJ, PE-SR405TN, RG405 PE44796

Pasternack Enterprises, Inc. • P.O. Box 16759, Irvine, CA 92623
Phone: (866) 727-8376 or (949) 261-1920 • **Fax:** (949) 261-7451
Sales@Pasternack.com • Techsupport@Pasternack.com

© 2016 Pasternack Enterprises All Rights Reserved

2.92mm Male Precision Connector Clamp/Solder Attachment for PE-SR405AL, PE-SR405FL, PE-SR405FLJ, PE-SR405TN, RG405

Compliance Certifications (see product page for current document)

Plotted and Other Data

Notes:

2.92mm Male Precision Connector Clamp/Solder Attachment for PE-SR405AL, PE-SR405FL, PE-SR405FLJ, PE-SR405TN, RG405 from Pasternack Enterprises has same day shipment for domestic and International orders. Our RF, microwave and millimeter wave products maintain a 99% availability and are part of the broadest selection in the industry.

Click the following link (or enter part number in "SEARCH" on website) to obtain additional part information including price, inventory and certifications: 2.92mm Male Precision Connector Clamp/Solder Attachment for PE-SR405AL, PE-SR405FL, PE-SR405FLJ, PE-SR405TN, RG405 PE44796

URL: https://www.pasternack.com/2.92mm-male-standard-pe-sr405al-pe-sr405fl-pe-sr405flj-rg405-connector-pe44796-p.aspx

The information contained in this document is accurate to the best of our knowledge and representative of the part described herein. It may be necessary to make modifications to the part and/or the documentation of the part, in order to implement improvements. Pasternack reserves the right to make such changes as required. Unless otherwise stated, all specifications are nominal. Pasternack does not make any representation or warranty regarding the suitability of the part described herein for any particular purpose, and Pasternack does not assume any liability arising out of the use of any part or documentation.

Pasternack Enterprises, Inc. • P.O. Box 16759, Irvine, CA 92623
Phone: (866) 727-8376 or (949) 261-1920 • **Fax:** (949) 261-7451
Sales@Pasternack.com • Techsupport@Pasternack.com

© 2016 Pasternack Enterprises All Rights Reserved

PE44796 CAD Drawing

2.92mm Male Precision Connector Clamp/Solder Attachment for PE-SR405AL, PE-SR405FL, PE-SR405FLJ, PE-SR405TN, RG405

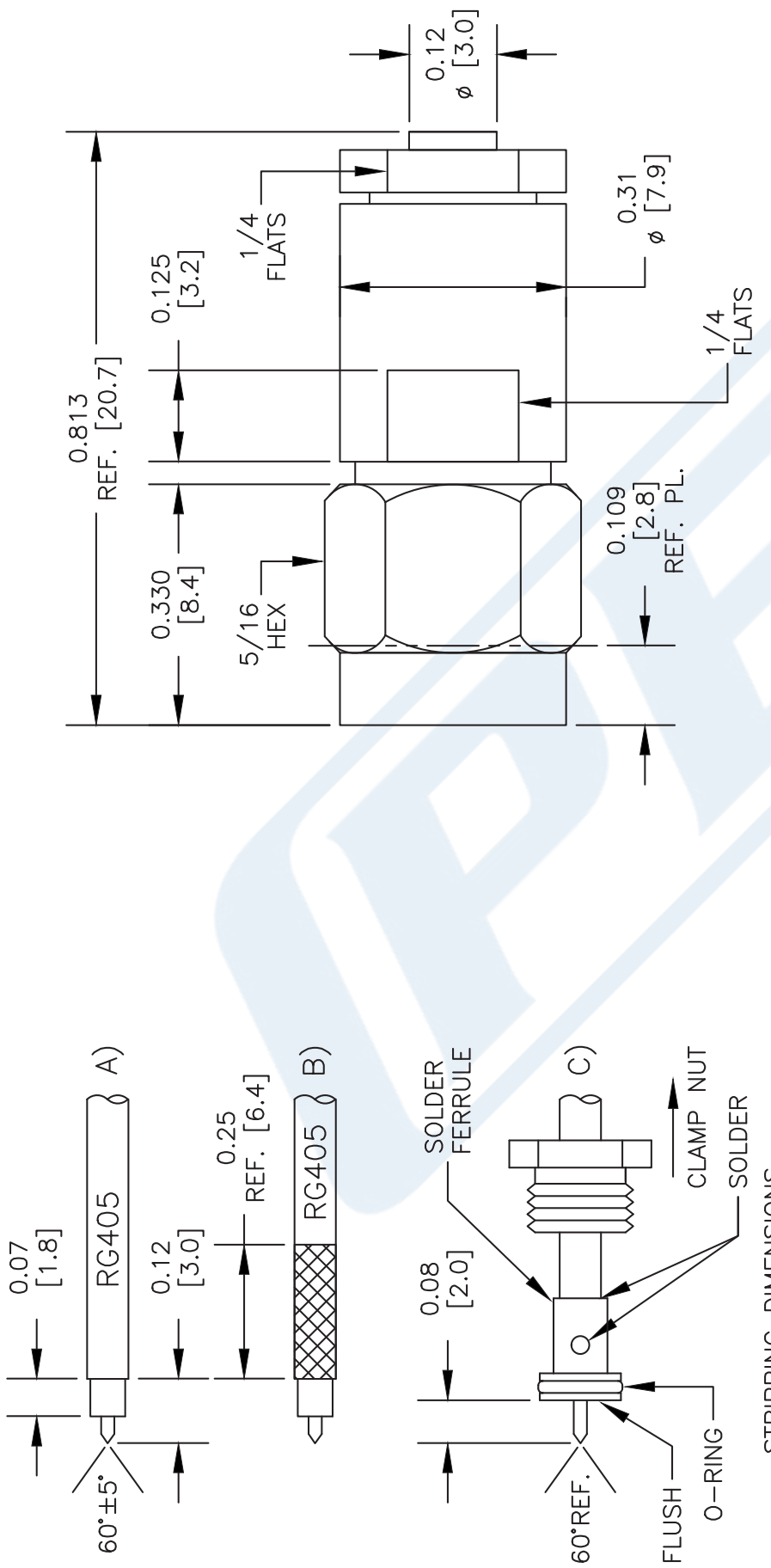

STRIPPING DIMENSIONS

ASSEMBLY PROCEDURES

1. STRIP CABLE AS SHOWN IN (A). DO NOT NICK DIELECTRIC.
2. PRE-TIN CABLE JACKET TO APPROXIMATE DIMENSION AS SHOWN IN (B).
3. INSERT CABLE THRU ADAPTER UNTIL IT BOTTOMS OUT. SOLDER OUTER CONDUCTOR TO ADAPTER & TRIM DIELECTRIC AS SHOWN IN (C).
4. SCREW ASSEMBLY INTO BODY & TIGHTEN NUT.

NOTES:
1. UNLESS OTHERWISE SPECIFIED ALL DIMENSIONS ARE NOMINAL.
2. ALL SPECIFICATIONS ARE SUBJECT TO CHANGE WITHOUT NOTICE AT ANY TIME.
3. DIMENSIONS ARE IN INCHES [mm].
4. FITS MIL-C-17 AND EQUIVALENT CABLES.

DWG TITLE
PE44796

FSCM NO. 53919

CAD FILE 042313 | SCALE N/A | SIZE A | 2233

PASTERNACK®
Pasternack Enterprises, Inc.
P.O. Box 16759 | Irvine | CA | 92623
Phone: (949) 261-1920 | Fax: (949) 261-7451
Website: www.pasternack.com | E-Mail: sales@pasternack.com

© 2016 Pasternack Enterprises All Rights Reserved

MATERIALS	
BODY	BRASS NICKEL PLATED
CONTACT	GOLD PLATED
INSULATOR	PTFE
SOLDER ADAPTER	BRASS GOLD PLATED

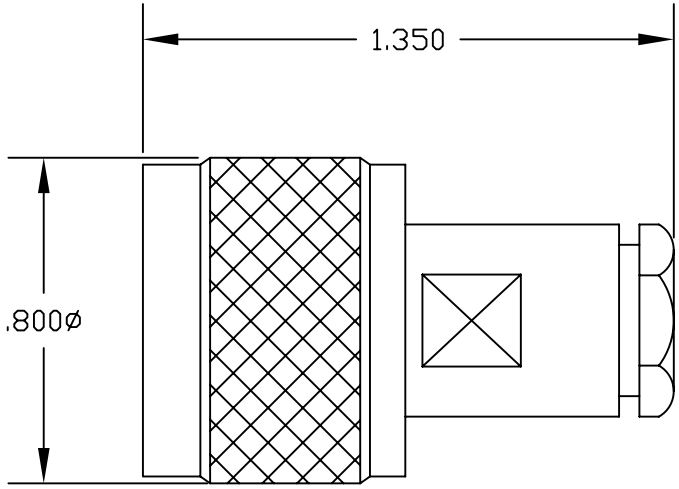

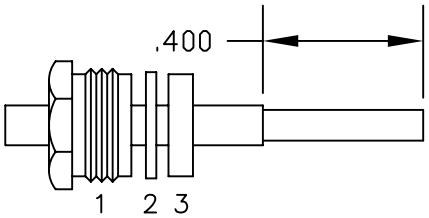

ASSEMBLY (A)

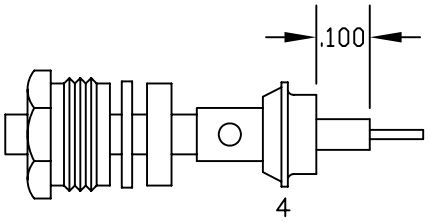

ASSEMBLY (B)

ASSEMBLY PROCEDURES

1. SLIDE CLAMP NUT (1), WASHER (2) & GASKET (3) OVER CABLE. STRIP CABLE AS SHOWN IN ASSEMBLY (A). DO NOT CUT DIELECTRIC.

2. SLIDE ADAPTER (4) OVER CABLE UNTIL ADAPTER (4) BOTTOMS ON OUTER CONDUCTOR. SOLDER ADAPTER (4) TO OUTER CONDUCTOR USING MINIMUM HEAT.

3. STRIP CABLE AS SHOWN IN ASSEMBLY (B). SOLDER CONTACT TO CENTER CONDUCTOR. SLIDE ASSEMBLY FORWARD & TIGHTEN TO BODY.

PASTERNACK ENTERPRISES®
ESTABLISHED 1972

PASTERNACK ENTERPRISES, INC.
P.O BOX 16759, IRVINE, CA 92623
PHONE (949) 261-1920 FAX (949) 261-7451

WEB ADDRESS: www.pasternack.com
E-MAIL ADDRESS: sales@pasternack.com

COAXIAL & FIBER OPTICS

DWG TITLE	DES.
PE4129	N MALE, SOLDER/CLAMP ATTACHMENT FOR RG405, PE-SR405AL & PE-SR405FL

REV. -	FSCM NO. 53919	CAD FILE 042309	SCALE N/A	SIZE A	147

NOTES:
1. UNLESS OTHERWISE SPECIFIED ALL DIMENSIONS ARE NOMINAL.
2. ALL SPECIFICATIONS ARE SUBJECT TO CHANGE WITHOUT NOTICE AT ANY TIME.
3. DIMENSIONS ARE IN INCHES.

PASTERNACK®
THE ENGINEER'S RF SOURCE

Formable 086 Semirigid Coax Cable with Tinned Braid Outer Conductor and Black FEP Jacket

RF Cables Technical Data Sheet PE-SR405FLJ

Configuration

- Formable Cable
- 1 Shield(s)

Features

- Dimensionally the same as standard solid outer conductor semi-rigid coax
- Standard semi-rigid connectors can be used
- Cable is hand formable and does not require special tools to bend
- Connectors are easily soldered to Tin soaked outer conductor
- Cable can be formed more than once without damage to outer conductor
- High RF Shielding >100 dB

Description

Formable semi-rigid coax is a hand formable version of standard semi-rigid that does not require complicated and costly pre-formed cable assemblies. Because the dimensions and electrical characteristics are so closely matched to semi-rigid coax, standard semi-rigid connectors can be used. The tin soaked copper braid outer shield provides excellent RF shielding. FEP Jacket reduces the chance of shorting exposed contacts or circuit conductors.

Electrical Specifications

Description	Minimum	Typical	Maximum	Units
Frequency Range	DC		61	GHz
Impedance		50		Ohms
Velocity of Propagation		69.5		%
Time Delay		1.43 [4.69]		ns/ft [ns/m]
Shielding Effectiveness	100			dB
Operating Voltage (AC)			1,500	Vrms
Inner Conductor DC Resistance			65.7	Ohms/1000ft
Outer Conductor DC Resistance			10.2	Ohms/1000ft
Nominal Capacitance		29 [95.14]		pF/ft [pF/m]

Performance by Frequency Band

Description	F1	F2	F3	F4	F5	Units
Frequency	0.5	1	5	10	20	GHz
Attenuation, Typ	15	22.5	54.9	81.2	120	dB/100ft
	49.21	73.82	180.12	266.4	393.7	dB/100m
Input Power (CW), Max	173.5	121.5	52.2	35.8	24.3	Watts

Click the following link (or enter part number in "SEARCH" on website) to obtain additional part information including price, inventory and certifications: Formable PE-SR405FLJ Coax Cable with Outer Conductor and Black FEP Jacket PE-SR-405FLJ

Pasternack Enterprises, Inc. • P.O. Box 16759, Irvine, CA 92623
Phone: (866) 727-8376 or (949) 261-1920 • **Fax:** (949) 261-7451
Sales@Pasternack.com • Techsupport@Pasternack.com

© 2017 Pasternack Enterprises All Rights Reserved

Formable 086 Semirigid Coax Cable with Tinned Braid Outer Conductor and Black FEP Jacket

Mechanical Specifications

Diameter	0.105 in [2.67 mm]
Weight	0.015 lbs/ft [0.02 Kg/m]
Min. Bend Radius (Installation)	0.5 in [12.7 mm]
Min. Bend Radius (Repeated)	0.787 in [19.99 mm]

Construction Specifications

Description	Material and Plating	Diameter
Inner Conductor	Copper Clad Steel, Silver, 1 Strands	0.02 in [0.51 mm]
Conductor Type	Solid	
Dielectric	PTFE	0.062 in [1.57 mm]
Outer Conductor	Tinned Copper Composite Braid	0.085 in [2.16 mm]
Jacket	FEP, Black	0.105 in [2.67 mm]

Environmental Specifications

Temperature

Operating Range	-55 to +125 deg C

Compliance Certifications (see product page for current document)

Plotted and Other Data

Notes:

Formable 086 Semirigid Coax Cable with Tinned Braid Outer Conductor and Black FEP Jacket from Pasternack Enterprises has same day shipment for domestic and International orders. Our RF, microwave and millimeter wave products maintain a 99.4% availability and are part of the broadest selection in the industry.

Click the following link (or enter part number in “SEARCH” on website) to obtain additional part information including price, inventory and certifications: Formable PE-SR405FLJ Coax Cable with Outer Conductor and Black FEP Jacket PE-SR405FLJ

URL: https://www.pasternack.com/50-ohm-formable-086-semirigid-tinned-braid-outer-conductor-fep-jacket-black-pe-sr405flj-p.aspx

The information contained in this document is accurate to the best of our knowledge and representative of the part described herein. It may be necessary to make modifications to the part and/or the documentation of the part, in order to implement improvements. Pasternack reserves the right to make such changes as required. Unless otherwise stated, all specifications are nominal. Pasternack does not make any representation or warranty regarding the suitability of the part described herein for any particular purpose, and Pasternack does not assume any liability arising out of the use of any part or documentation.

Pasternack Enterprises, Inc. • P.O. Box 16759, Irvine, CA 92623
Phone: (866) 727-8376 or (949) 261-1920 • **Fax:** (949) 261-7451
Sales@Pasternack.com • Techsupport@Pasternack.com

© 2017 Pasternack Enterprises All Rights Reserved

PE-SR405FLJ CAD Drawing

Formable 086 Semirigid Coax Cable with Tinned Braid
Outer Conductor and Black FEP Jacket

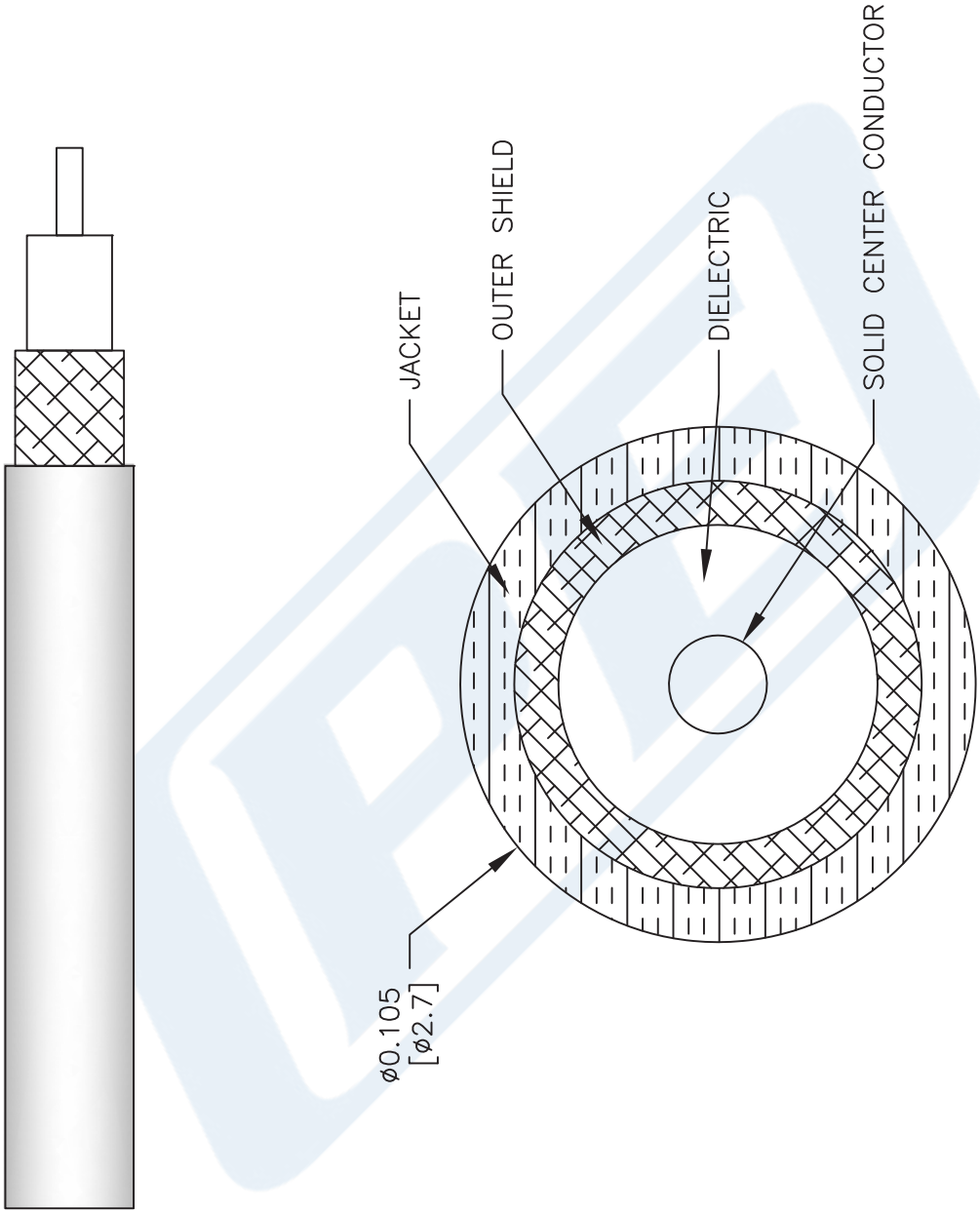

NOTES:
1. UNLESS OTHERWISE SPECIFIED ALL DIMENSIONS ARE NOMINAL.
2. ALL SPECIFICATIONS ARE SUBJECT TO CHANGE WITHOUT NOTICE AT ANY TIME.
3. DIMENSIONS ARE IN INCHES [mm].

DWG TITLE
PE-SR405FLJ

CAD FILE 062817 | SCALE N/A | SIZE A | 2233

CAGE CODE 53919

PASTERNACK®
THE ENGINEER'S RF SOURCE
Pasternack Enterprises, Inc.
P.O. Box 16759 | Irvine | CA | 92623
Phone: (949) 261-1920 | **Fax:** (949) 261-7451
Website: www.pasternack.com | **E-Mail:** sales@pasternack.com

© 2017 Pasternack Enterprises All Rights Reserved