2.92mm Male Precision Connector Clamp/Solder Attachment for PE-SR405AL, PE-SR405FL, PE-SR405FLJ, PE-SR405TN, RG405

RF Connectors Technical Data Sheet PE44796

Configuration

- 2.92mm Male Connector
- 50 Ohms
- Straight Body Geometry
- PE-SR405AL, PE-SR405FL, PE-SR405FLJ, PE-SR405TN, RG405 Interface Type
- Clamp/Solder Attachment
- 5/16 inch Hex
- Precision Design

Features

- Max. Operating Frequency 40 GHz
- Excellent VSWR of 1.18:1
- Gold over Nickel Plated Beryllium Copper Contact
- 50 µin minimum contact plating

Applications

- General Purpose Test
- Precision Test & Measurement
- Custom Cable Assemblies

Description

Pasternack's PE44796 2.92mm male precision connector with clamp/solder attachment for PE-SR405AL, PE-SR405FL, PE-SR405FLJ, PE-SR405TN and RG405 is part of our full line of RF components available for same-day shipping. Our 2.92mm male connector operates up to a maximum frequency of 40 GHz and offers excellent VSWR of 1.18:1.

Our 2.92mm male connector PE44796 datasheet specifications and drawing with dimensions are shown below in this PDF. Pasternack's broad catalog of RF, microwave and millimeter wave connectors allows designers to configure and customize their signal connections however they like. Whether the need is to provide an I/O for a board design, or simply create a custom cable assembly configuration, Pasternack has the right connector for the job. Pasternack can also expertly build your custom cable assemblies for you and ship same-day.

Electrical Specifications

Description	Minimum	Typical	Maximum	Units
Frequency Range	DC		40	GHz
VSWR			1.18:1	
Insertion Loss			0.26	dB
Operating Voltage (AC)			170	Vrms
Dielectric Withstanding Voltage (AC)			500	Vrms
High Potential Voltage 5 to 7.5 MHz			325	Vrms
Corona Discharge at 70,000 ft			125	Vrms
Insulation Resistance	5,000			MOhms

Click the following link (or enter part number in "SEARCH" on website) to obtain additional part information including price, inventory and certifications: 2.92mm Male Precision Connector Clamp/Solder Attachment for PE-SR405AL, PE-SR405FL, PE-SR405FLJ, PE-SR405TN, RG405 PE44796

Pasternack Enterprises, Inc. • P.O. Box 16759, Irvine, CA 92623
Phone: (866) 727-8376 or (949) 261-1920 • **Fax:** (949) 261-7451
Sales@Pasternack.com • Techsupport@Pasternack.com

© 2016 Pasternack Enterprises All Rights Reserved

2.92mm Male Precision Connector Clamp/Solder Attachment for PE-SR405AL, PE-SR405FL, PE-SR405FLJ, PE-SR405TN, RG405

Performance by Frequency

Description	F1	F2	F3	F4	F5	Units
Frequency Range	DC to 18	18 to 26.5	26.5 to 40			GHz
VSWR, Max	1.12:1	1.14:1	1.18:1			

Electrical Specification Notes:
Insertion loss: 0.04 x sqrt(fGHz) dB max.

Mechanical Specifications

Size

Length	0.813 in [20.65 mm]
Width/Dia.	0.315 in [8.00 mm]
Weight	0.014 lbs [6.35 g]
Mating Cycles	500 Cycles
Mating Torque	8 to 10 in-lbs [0.90 to 1.13 Nm]

Material Specifications

Description	Material	Plating
Contact	Beryllium Copper	Gold over Nickel 50 µin minimum
Insulation	PCTFE	
Body	Passivated Stainless Steel	SAE-AMS-2700
Coupling Nut	Passivated Stainless Steel	SAE-AMS-2700

Environmental Specifications

Temperature

Operating Range	-65 to +165 deg C
Humidity	MIL-STD-202, Method 106, No Vibration
Shock	MIL-STD-202, Method 213, Condition I
Vibration	MIL-STD-202, Method 204, Condition D
Thermal Shock	MIL-STD-202, Method 107, Condition B
Salt Spray	MIL-STD-202, Method 101, Condition B (5%)

Click the following link (or enter part number in "SEARCH" on website) to obtain additional part information including price, inventory and certifications: 2.92mm Male Precision Connector Clamp/Solder Attachment for PE-SR405AL, PE-SR405FL, PE-SR405FLJ, PE-SR405TN, RG405 PE44796

Pasternack Enterprises, Inc. • P.O. Box 16759, Irvine, CA 92623
Phone: (866) 727-8376 or (949) 261-1920 • **Fax:** (949) 261-7451
Sales@Pasternack.com • Techsupport@Pasternack.com

© 2016 Pasternack Enterprises All Rights Reserved

2.92mm Male Precision Connector Clamp/Solder Attachment for PE-SR405AL, PE-SR405FL, PE-SR405FLJ, PE-SR405TN, RG405

Compliance Certifications (see product page for current document)

Plotted and Other Data

Notes:

2.92mm Male Precision Connector Clamp/Solder Attachment for PE-SR405AL, PE-SR405FL, PE-SR405FLJ, PE-SR405TN, RG405 from Pasternack Enterprises has same day shipment for domestic and International orders. Our RF, microwave and millimeter wave products maintain a 99% availability and are part of the broadest selection in the industry.

Click the following link (or enter part number in "SEARCH" on website) to obtain additional part information including price, inventory and certifications: 2.92mm Male Precision Connector Clamp/Solder Attachment for PE-SR405AL, PE-SR405FL, PE-SR405FLJ, PE-SR405TN, RG405 PE44796

URL: https://www.pasternack.com/2.92mm-male-standard-pe-sr405al-pe-sr405fl-pe-sr405flj-rg405-connector-pe44796-p.aspx

The information contained in this document is accurate to the best of our knowledge and representative of the part described herein. It may be necessary to make modifications to the part and/or the documentation of the part, in order to implement improvements. Pasternack reserves the right to make such changes as required. Unless otherwise stated, all specifications are nominal. Pasternack does not make any representation or warranty regarding the suitability of the part described herein for any particular purpose, and Pasternack does not assume any liability arising out of the use of any part or documentation.

Pasternack Enterprises, Inc. • P.O. Box 16759, Irvine, CA 92623
Phone: (866) 727-8376 or (949) 261-1920 • **Fax:** (949) 261-7451
Sales@Pasternack.com • Techsupport@Pasternack.com

© 2016 Pasternack Enterprises All Rights Reserved

PE44796 CAD Drawing

2.92mm Male Precision Connector Clamp/Solder Attachment for PE-SR405AL, PE-SR405FL, PE-SR405FLJ, PE-SR405TN, RG405

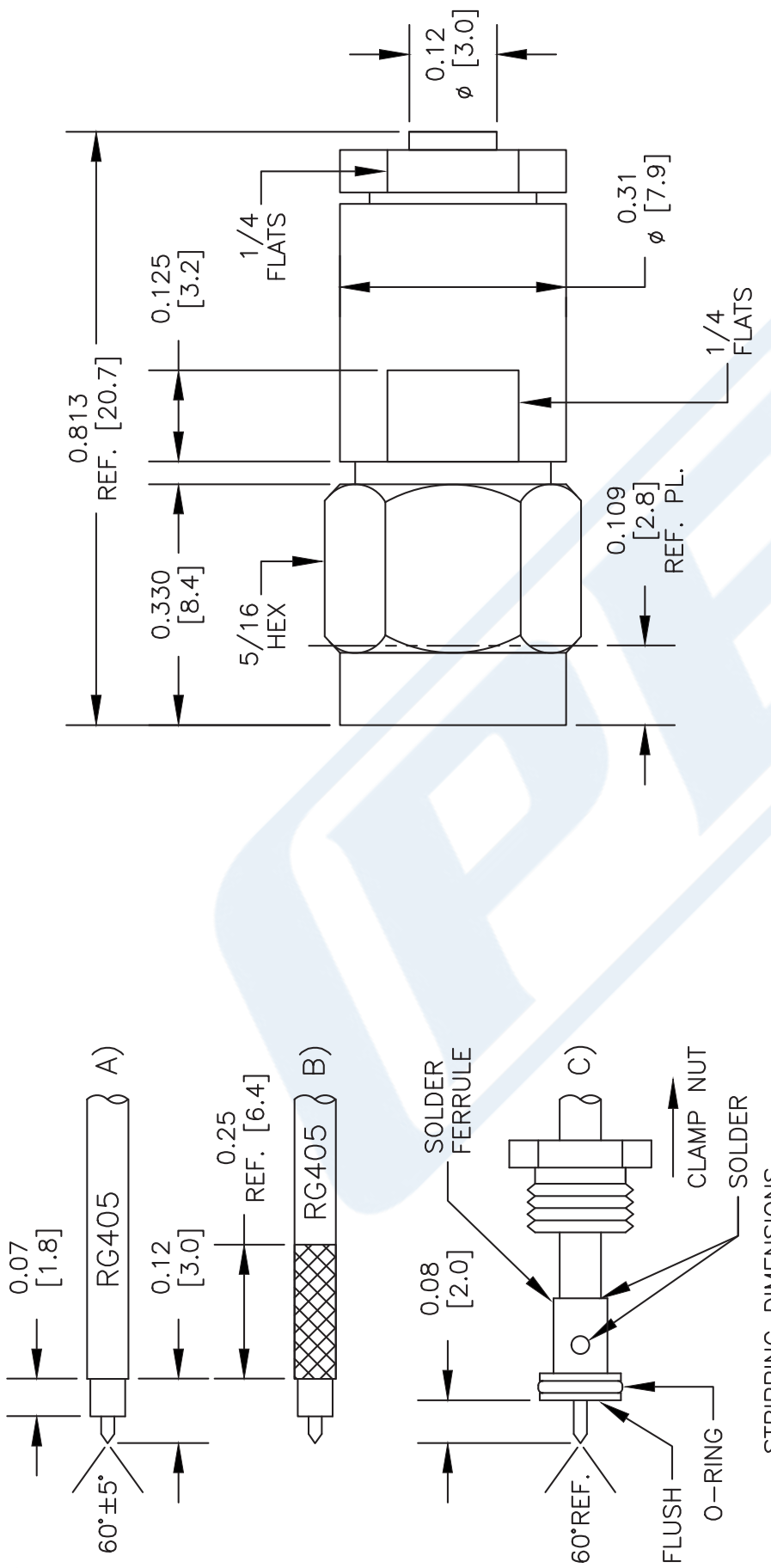

STRIPPING DIMENSIONS

ASSEMBLY PROCEDURES

1. STRIP CABLE AS SHOWN IN (A). DO NOT NICK DIELECTRIC.
2. PRE-TIN CABLE JACKET TO APPROXIMATE DIMENSION AS SHOWN IN (B).
3. INSERT CABLE THRU ADAPTER UNTIL IT BOTTOMS OUT. SOLDER OUTER CONDUCTOR TO ADAPTER & TRIM DIELECTRIC AS SHOWN IN (C).
4. SCREW ASSEMBLY INTO BODY & TIGHTEN NUT.

NOTES:
1. UNLESS OTHERWISE SPECIFIED ALL DIMENSIONS ARE NOMINAL.
2. ALL SPECIFICATIONS ARE SUBJECT TO CHANGE WITHOUT NOTICE AT ANY TIME.
3. DIMENSIONS ARE IN INCHES [mm].
4. FITS MIL-C-17 AND EQUIVALENT CABLES.

DWG TITLE
PE44796

FSCM NO. 53919

CAD FILE 042313 | SCALE N/A | SIZE A | 2233

PASTERNACK®
Pasternack Enterprises, Inc.
P.O. Box 16759 | Irvine | CA | 92623
Phone: (949) 261-1920 | Fax: (949) 261-7451
Website: www.pasternack.com | E-Mail: sales@pasternack.com

© 2016 Pasternack Enterprises All Rights Reserved

PASTERNACK®
THE ENGINEER'S RF SOURCE

SMP Female Push-On Connector Solder Attachment for RG405, PE-SR405AL, PE-SR405FL, PE-SR405FLJ, Up To 8 GHz

RF Connectors Technical Data Sheet PE45285

Configuration

- Push-On SMP Female Connector
- MIL-STD-348A
- 50 Ohms
- Straight Body Geometry
- RG405, PE-SR405AL, PE-SR405FL, PE-SR405FLJ Interface Type
- Solder/Solder Attachment

Features

- Max. Operating Frequency 8 GHz
- Excellent VSWR of 1.15:1
- Gold Plated Beryllium Copper Contact
- Contact plating according to MIL-DTL-45204
- Blind Mate Connector

Applications

- General Purpose Test
- Custom Cable Assemblies

Description

Pasternack's PE45285 SMP female push-on connector with solder/solder attachment for RG405, PE-SR405AL, PE-SR405FL and PE-SR405FLJ is part of our full line of RF components available for same-day shipping. Our SMP female connector operates up to a maximum frequency of 8 GHz and offers excellent VSWR of 1.15:1. The Pasternack blind mate connector is ideal for applications where direct visual or tactile access to the connection point is not possible, for example, when two circuit boards need to be mated.

Our SMP female connector PE45285 datasheet specifications and drawing with dimensions are shown below in this PDF. Pasternack's broad catalog of RF, microwave and millimeter wave connectors allows designers to configure and customize their signal connections however they like. Whether the need is to provide an I/O for a board design, or simply create a custom cable assembly configuration, Pasternack has the right connector for the job. Pasternack can also expertly build your custom cable assemblies for you and ship same-day. Pasternack 8 GHz SMP connectors are designed to offer a low cost alternative where the SMP form factor is desired but the standard SMP frequency range is not needed. The line of 8 GHz SMP connectors is fully compatible with industry standard SMP and GPO® connectors. These SMP connectors offer a low cost high performance blind-mate solution for lower frequency applications. The Male versions of the 8 GHz SMP is available in Full Detent, Limited Detent, and Smooth Bore versions.

Electrical Specifications

Description	Minimum	Typical	Maximum	Units
Frequency Range	DC		8	GHz
VSWR			1.15:1	

Mechanical Specifications

Size

Length	0.25 in [6.35 mm]
Width/Dia.	0.157 in [3.99 mm]

Click the following link (or enter part number in "SEARCH" on website) to obtain additional part information including price, inventory and certifications: SMP Female Push-On Connector Solder Attachment for RG405, PE-SR405AL, PE-SR405FL, PE-SR405FLJ, Up To 8 GHz PE45285

Pasternack Enterprises, Inc. • P.O. Box 16759, Irvine, CA 92623
Phone: (866) 727-8376 or (949) 261-1920 • **Fax:** (949) 261-7451
Sales@Pasternack.com • Techsupport@Pasternack.com

© 2016 Pasternack Enterprises All Rights Reserved

SMP Female Push-On Connector Solder Attachment for RG405, PE-SR405AL, PE-SR405FL, PE-SR405FLJ, Up To 8 GHz

Weight	0.0014 lbs [0.64 g]

Material Specifications

Description	Material	Plating
Contact	Beryllium Copper	Gold MIL-DTL-45204
Insulation	PTFE	
Outer Conductor	Beryllium Copper	Gold MIL-DTL-45204
Body	Beryllium Copper	Gold MIL-DTL-45204

Environmental Specifications

Temperature

Operating Range	-55 to +155 deg C
Humidity	MIL-STD-202, Method 106 (except 7b omitted)
Shock	MIL-STD-202, Method 213, Condition I
Vibration	MIL-STD-202, Method 204, Condition D
Salt Spray	MIL-STD-202, Method 101, Condition B

Click the following link (or enter part number in "SEARCH" on website) to obtain additional part information including price, inventory and certifications: SMP Female Push-On Connector Solder Attachment for RG405, PE-SR405AL, PE-SR405FL, PE-SR405FLJ, Up To 8 GHz PE45285

Pasternack Enterprises, Inc. • P.O. Box 16759, Irvine, CA 92623
Phone: (866) 727-8376 or (949) 261-1920 • **Fax:** (949) 261-7451
Sales@Pasternack.com • Techsupport@Pasternack.com

© 2016 Pasternack Enterprises All Rights Reserved

SMP Female Push-On Connector Solder Attachment for RG405, PE-SR405AL, PE-SR405FL, PE-SR405FLJ, Up To 8 GHz

Compliance Certifications (see product page for current document)

Plotted and Other Data

Notes:

SMP Female Push-On Connector Solder Attachment for RG405, PE-SR405AL, PE-SR405FL, PE-SR405FLJ, Up To 8 GHz from Pasternack Enterprises has same day shipment for domestic and International orders. Our RF, microwave and millimeter wave products maintain a 99% availability and are part of the broadest selection in the industry.

Click the following link (or enter part number in "SEARCH" on website) to obtain additional part information including price, inventory and certifications: SMP Female Push-On Connector Solder Attachment for RG405, PE-SR405AL, PE-SR405FL, PE-SR405FLJ, Up To 8 GHz PE45285

URL: https://www.pasternack.com/smp-female-push-on-rg405-pe-sr405al-pe-sr405fl-pe-sr405flj-connector-pe45285-p.aspx

The information contained in this document is accurate to the best of our knowledge and representative of the part described herein. It may be necessary to make modifications to the part and/or the documentation of the part, in order to implement improvements. Pasternack reserves the right to make such changes as required. Unless otherwise stated, all specifications are nominal. Pasternack does not make any representation or warranty regarding the suitability of the part described herein for any particular purpose, and Pasternack does not assume any liability arising out of the use of any part or documentation.

Pasternack Enterprises, Inc. • P.O. Box 16759, Irvine, CA 92623
Phone: (866) 727-8376 or (949) 261-1920 • **Fax:** (949) 261-7451
Sales@Pasternack.com • Techsupport@Pasternack.com

© 2016 Pasternack Enterprises All Rights Reserved

PE45285 CAD Drawing

SMP Female Push-On Connector Solder Attachment for RG405, PE-SR405AL, PE-SR405FL, PE-SR405FLJ, Up To 8 GHz

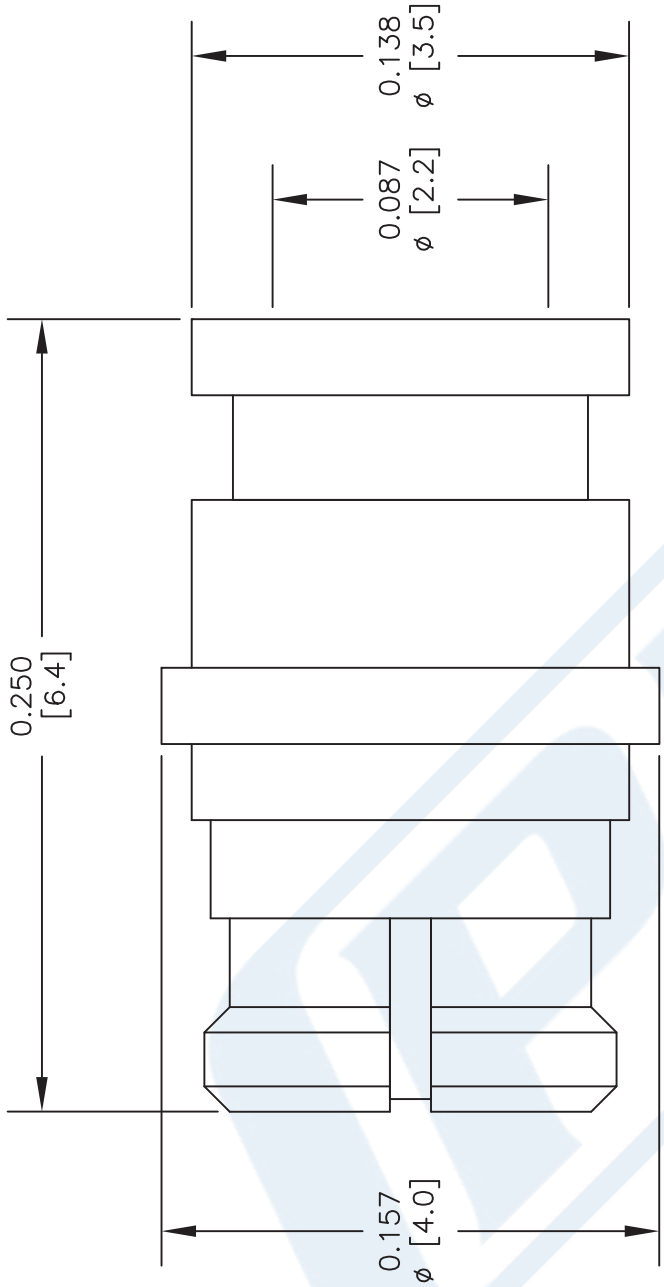

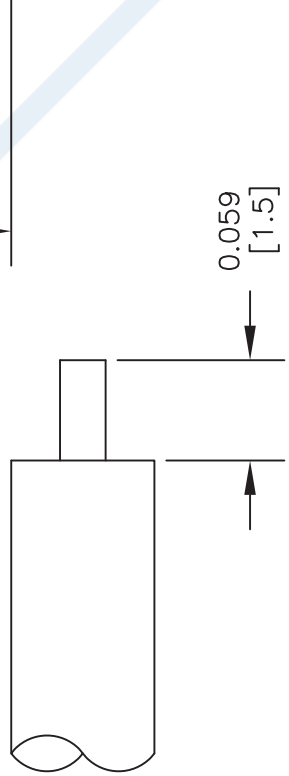

STRIPPING DIMENSIONS

ASSEMBLY PROCEDURES

1. STRIP CABLE AS SHOWN. DO NOT NICK CENTER CONDUCTOR.
2. SOLDER CONTACT TO CENTER CONDUCTOR.
3. INSERT CABLE INTO BODY UNTIL IT BOTTOMS OUT. SOLDER OUTER CONDUCTOR TO BODY.

NOTES:
1. UNLESS OTHERWISE SPECIFIED ALL DIMENSIONS ARE NOMINAL.
2. ALL SPECIFICATIONS ARE SUBJECT TO CHANGE WITHOUT NOTICE AT ANY TIME.
3. DIMENSIONS ARE IN INCHES [mm].
4. FITS MIL-C-17 AND EQUIVALENT CABLES.

DWG TITLE
PE45285

FSCM NO. 53919

CAD FILE 081616 | SCALE N/A | SIZE A | 2233

PASTERNACK® THE ENGINEER'S RF SOURCE
Pasternack Enterprises, Inc.
P.O. Box 16759 | Irvine | CA | 92623
Phone: (949) 261-1920 | **Fax:** (949) 261-7451
Website: www.pasternack.com | **E-Mail:** sales@pasternack.com

© 2016 Pasternack Enterprises All Rights Reserved

PASTERNACK
an INFINITE brand

086 Semi-rigid Coax Cable with Tinned Aluminum Outer Conductor

RF Cables
Technical Data Sheet

PE-SR405AL

Configuration

- Semi-Rigid Cable
- 1 Shield(s)

Features

- Tinned Aluminum Outer Conductor
- Max Frequency 40 GHz

Applications

- Test and Measurement
- Communication Systems
- Wireless Systems
- Medical Equipment
- RADAR
- Low Loss Applications
- Field Installations

Description

Semi-rigid coaxial cable provides the highest electrical performance including low loss and high RF shielding effectiveness, which is why it is the cable type of choice for many RF and microwave engineers. Pasternack's PE-SR405AL is a .086 semi-rigid coax cable constructed with silver plated copper clad steel inner conductor, solid PTFE dielectric and tinned aluminum outer conductor. This .086 semi-rigid cable has a maximum operating frequency of 40 GHz and is designed as a superior alternative to the standard RG-405 cable. Semi-rigid cable is used in a wide variety of applications including when higher operating frequency or precision performance is required. PE-SR405AL .086 semi-rigid coaxial cable datasheet specifications and outline drawing are shown in the PDF below.

Pasternack carries a wide range of cables ready to ship same day to fit your needs. They are available in corrugated, flexible, formable or semi-rigid versions with different constructions of conductor materials, dielectric materials, shielding configurations and jacket materials. Our cables are designed to fit a wide range of performance criteria including attenuation, operating temperature, environmental factor, and power capability.

Electrical Specifications

Description	Minimum	Typical	Maximum	Units
Frequency Range	DC		40	GHz
Impedance		50		Ohms
Dielectric Withstanding Voltage (AC)			5,000	Vrms

Click the following link (or enter part number in "SEARCH" on website) to obtain additional part information including price, inventory and certifications: 086 Semi-rigid Coax Cable with Tinned Aluminum Outer Conductor PE-SR405AL

Pasternack Enterprises, Inc. • P.O. Box 16759, Irvine, CA 92623
Phone: (866) 727-8376 or (949) 261-1920 • **Fax:** (949) 261-7451
Sales@Pasternack.com • Techsupport@Pasternack.com

© 2019 Pasternack Enterprises All Rights Reserved

086 Semi-rigid Coax Cable with Tinned Aluminum Outer Conductor

RF Cables
Technical Data Sheet

PE-SR405AL

Performance by Frequency Band

Description	F1	F2	F3	F4	F5	Units
Frequency	1	10	20			GHz
Attenuation, Max	23	81	131			dB/100ft
	75.46	265.75	429.79			dB/100m
Input Power (CW), Max	130	35	20			Watts

Mechanical Specifications

Min. Bend Radius (Installation) 0.05 in [1.27 mm]

Construction Specifications

Description	Material and Plating	Diameter
Inner Conductor	Copper Clad Steel, Silver, 1 Strands	0.02 in [0.51 mm]
Conductor Type	Solid	
Dielectric	PTFE	0.066 in [1.68 mm]
Outer Conductor	Tinned Aluminum	0.086 in [2.18 mm]

Environmental Specifications

Temperature

Operating Range -55 to +125 deg C

Click the following link (or enter part number in “SEARCH” on website) to obtain additional part information including price, inventory and certifications: 086 Semi-rigid Coax Cable with Tinned Aluminum Outer Conductor PE-SR405AL

Pasternack Enterprises, Inc. • P.O. Box 16759, Irvine, CA 92623
Phone: (866) 727-8376 or (949) 261-1920 • **Fax:** (949) 261-7451
Sales@Pasternack.com • Techsupport@Pasternack.com

© 2019 Pasternack Enterprises All Rights Reserved

086 Semi-rigid Coax Cable with Tinned Aluminum Outer Conductor

RF Cables
Technical Data Sheet

PE-SR405AL

Compliance Certifications (see product page for current document)

Plotted and Other Data

Notes:

086 Semi-rigid Coax Cable with Tinned Aluminum Outer Conductor from Pasternack Enterprises has same day shipment for domestic and International orders. Our RF, microwave and millimeter wave products maintain a 99.4% availability and are part of the broadest selection in the industry.

Click the following link (or enter part number in “SEARCH” on website) to obtain additional part information including price, inventory and certifications: 086 Semi-rigid Coax Cable with Tinned Aluminum Outer Conductor PE-SR405AL

URL: https://www.pasternack.com/semirigid-0.085-50-ohm-coax-cable-tinned-aluminum-pe-sr405al-p.aspx

The information contained in this document is accurate to the best of our knowledge and representative of the part described herein. It may be necessary to make modifications to the part and/or the documentation of the part, in order to implement improvements. Pasternack reserves the right to make such changes as required. Unless otherwise stated, all specifications are nominal. Pasternack does not make any representation or warranty regarding the suitability of the part described herein for any particular purpose, and Pasternack does not assume any liability arising out of the use of any part or documentation.

Pasternack Enterprises, Inc. • P.O. Box 16759, Irvine, CA 92623
Phone: (866) 727-8376 or (949) 261-1920 • **Fax:** (949) 261-7451
Sales@Pasternack.com • Techsupport@Pasternack.com

© 2019 Pasternack Enterprises All Rights Reserved

PE-SR405AL CAD Drawing

086 Semi-rigid Coax Cable with Tinned Aluminum Outer Conductor

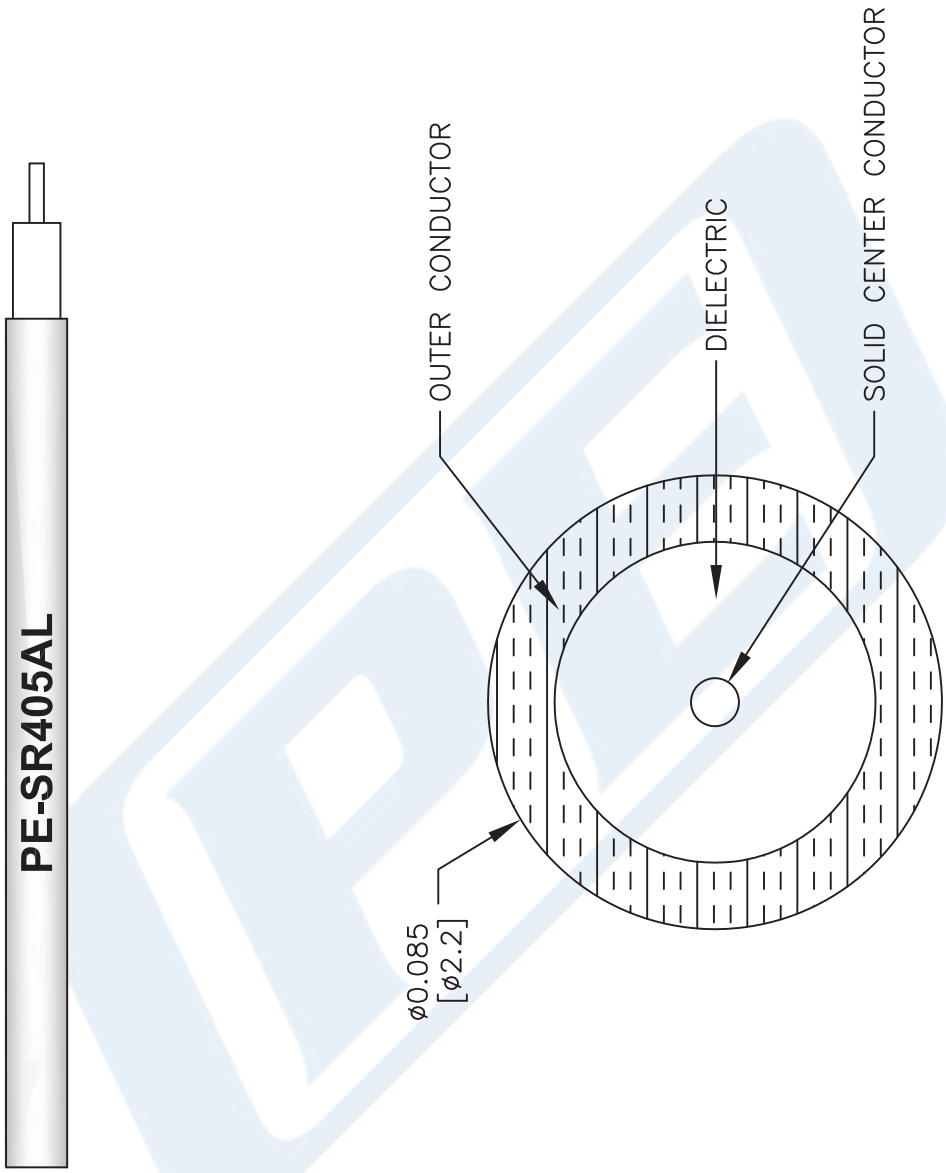

NOTES:
1. UNLESS OTHERWISE SPECIFIED ALL DIMENSIONS ARE NOMINAL.
2. ALL SPECIFICATIONS ARE SUBJECT TO CHANGE WITHOUT NOTICE AT ANY TIME.
3. DIMENSIONS ARE IN INCHES [mm].

DWG TITLE
PE-SR405AL

FSCM NO. 53919

CAD FILE 111716 | SCALE N/A | SIZE A | 41742

PASTERNACK®
THE ENGINEER'S RF SOURCE
Pasternack Enterprises, Inc.
P.O. Box 16759 | Irvine | CA | 92623
Phone: (949) 261-1920 | **Fax:** (949) 261-7451
Website: www.pasternack.com | **E-Mail:** sales@pasternack.com

© 2019 Pasternack Enterprises All Rights Reserved