PASTERNACK®
THE ENGINEER'S RF SOURCE

7/16 DIN Male Connector Clamp/Solder Attachment for RG393, RG214, RG225, RG215, RG8

RF Connectors
Technical Data Sheet

PE4567

Configuration

- 7/16 DIN Male Connector
- IEC 169-4
- 50 Ohms
- Straight Body Geometry
- RG393, RG214, RG225, RG215, RG8 Interface Type
- Clamp/Solder Attachment
- 32 mm Hex

Features

- Max. Operating Frequency 1 GHz
- Good VSWR of 1.3:1
- Gold Plated Brass Contact
- 30 µin minimum contact plating

Applications

- General Purpose Test
- Custom Cable Assemblies

Description

Pasternack's PE4567 7/16 DIN male connector with clamp/solder attachment for RG393, RG214, RG225, RG215 and RG8 is part of our full line of RF components available for same-day shipping. Our 7/16 DIN male connector operates up to a maximum frequency of 1 GHz and offers good VSWR of 1.3:1.

Our 7/16 DIN male connector PE4567 datasheet specifications and drawing with dimensions are shown below in this PDF. Pasternack's broad catalog of RF, microwave and millimeter wave connectors allows designers to configure and customize their signal connections however they like. Whether the need is to provide an I/O for a board design, or simply create a custom cable assembly configuration, Pasternack has the right connector for the job. Pasternack can also expertly build your custom cable assemblies for you and ship same-day.

Electrical Specifications

Description	Minimum	Typical	Maximum	Units
Frequency Range	DC		1,000	MHz
VSWR			1.3:1	
Operating Voltage (AC)			2,700	Vrms

Mechanical Specifications

Size	
Length	1.5 in [38.1 mm]
Width/Dia.	1.25 in [31.75 mm]
Weight	0.227 lbs [102.97 g]
Mating Torque	221 to 265 in-lbs [24.97 to 29.95 Nm]

Click the following link (or enter part number in "SEARCH" on website) to obtain additional part information including price, inventory and certifications: 7/16 DIN Male Connector Clamp/Solder Attachment for RG393, RG214, RG225, RG215, RG8 PE4567

Pasternack Enterprises, Inc. • P.O. Box 16759, Irvine, CA 92623
Phone: (866) 727-8376 or (949) 261-1920 • **Fax:** (949) 261-7451
Sales@Pasternack.com • Techsupport@Pasternack.com

© 2018 Pasternack Enterprises All Rights Reserved

7/16 DIN Male Connector Clamp/Solder Attachment for RG393, RG214, RG225, RG215, RG8

Material Specifications

Description	Material	Plating
Contact	Brass	Gold 30 µin minimum
Insulation	PTFE	
Body	Brass	Nickel 100 µin minimum
Coupling Nut	Brass	Nickel 100 µin minimum

Environmental Specifications

Temperature

Operating Range -55 to +155 deg C

Compliance Certifications (see product page for current document)

Plotted and Other Data

Notes:

Click the following link (or enter part number in "SEARCH" on website) to obtain additional part information including price, inventory and certifications: 7/16 DIN Male Connector Clamp/Solder Attachment for RG393, RG214, RG225, RG215, RG8 PE4567

Pasternack Enterprises, Inc. • P.O. Box 16759, Irvine, CA 92623
Phone: (866) 727-8376 or (949) 261-1920 • **Fax:** (949) 261-7451
Sales@Pasternack.com • Techsupport@Pasternack.com

© 2018 Pasternack Enterprises All Rights Reserved

7/16 DIN Male Connector Clamp/Solder Attachment for RG393, RG214, RG225, RG215, RG8

Assembly Instruction

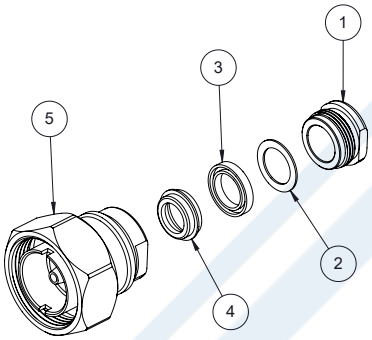

ASSEMBLY PROCEDURES

1. SLIDE CLAMP NUT ①, WASHER ② & GASKET ③ OVER CABLE. STRIP AS SHOWN. DO NOT NICK BRAID WHILE CUTTING JACKET. TAPER END OF BRAID TO CABLE PERMIT ASSEMBLY OF BRAID CLAMP ④.

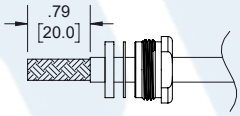

2. SLIDE BRAID CLAMP ④ OVER BRAID & SEAT AGAINST CABLE. FORM BRAID OVER CLAMP NUT ④ TRIM BRAID BACK TO SHOULDER. CUT DIELECTRIC & CENTER CONDUCTOR TO DIMENSION SHOWN. DO NOT NICK CENTER CONDUCTOR INSERT CABLE INTO BODY AND TIGHTEN.

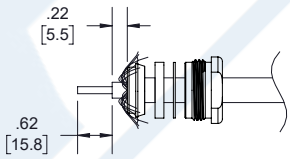

3. SOLDER CENTER CONDUCTOR TO CENTER PIN FROM THE END. REMOVE EXCESS SOLDER FOR A FLUSHED FINISH.

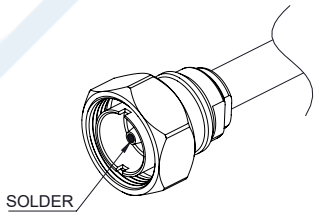

Click the following link (or enter part number in "SEARCH" on website) to obtain additional part information including price, inventory and certifications: 7/16 DIN Male Connector Clamp/Solder Attachment for RG393, RG214, RG225, RG215, RG8 PE4567

Pasternack Enterprises, Inc. • P.O. Box 16759, Irvine, CA 92623
Phone: (866) 727-8376 or (949) 261-1920 • **Fax:** (949) 261-7451
Sales@Pasternack.com • Techsupport@Pasternack.com

© 2018 Pasternack Enterprises All Rights Reserved

7/16 DIN Male Connector Clamp/Solder Attachment for RG393, RG214, RG225, RG215, RG8

RF Connectors
Technical Data Sheet

PE4567

7/16 DIN Male Connector Clamp/Solder Attachment for RG393, RG214, RG225, RG215, RG8 from Pasternack Enterprises has same day shipment for domestic and International orders. Our RF, microwave and millimeter wave products maintain a 99.4% availability and are part of the broadest selection in the industry.

Click the following link (or enter part number in "SEARCH" on website) to obtain additional part information including price, inventory and certifications: 7/16 DIN Male Connector Clamp/Solder Attachment for RG393, RG214, RG225, RG215, RG8 PE4567

URL: https://www.pasternack.com/7-16-male-rg213-rg214-rg8-rg9-rg225-rg393-connector-pe4567-p.aspx

The information contained in this document is accurate to the best of our knowledge and representative of the part described herein. It may be necessary to make modifications to the part and/or the documentation of the part, in order to implement improvements. Pasternack reserves the right to make such changes as required. Unless otherwise stated, all specifications are nominal. Pasternack does not make any representation or warranty regarding the suitability of the part described herein for any particular purpose, and Pasternack does not assume any liability arising out of the use of any part or documentation.

Pasternack Enterprises, Inc. • P.O. Box 16759, Irvine, CA 92623
Phone: (866) 727-8376 or (949) 261-1920 • **Fax:** (949) 261-7451
Sales@Pasternack.com • Techsupport@Pasternack.com

© 2018 Pasternack Enterprises All Rights Reserved

PE4567 CAD Drawing

7/16 DIN Male Connector Clamp/Solder Attachment for
RG393, RG214, RG225, RG215, RG8

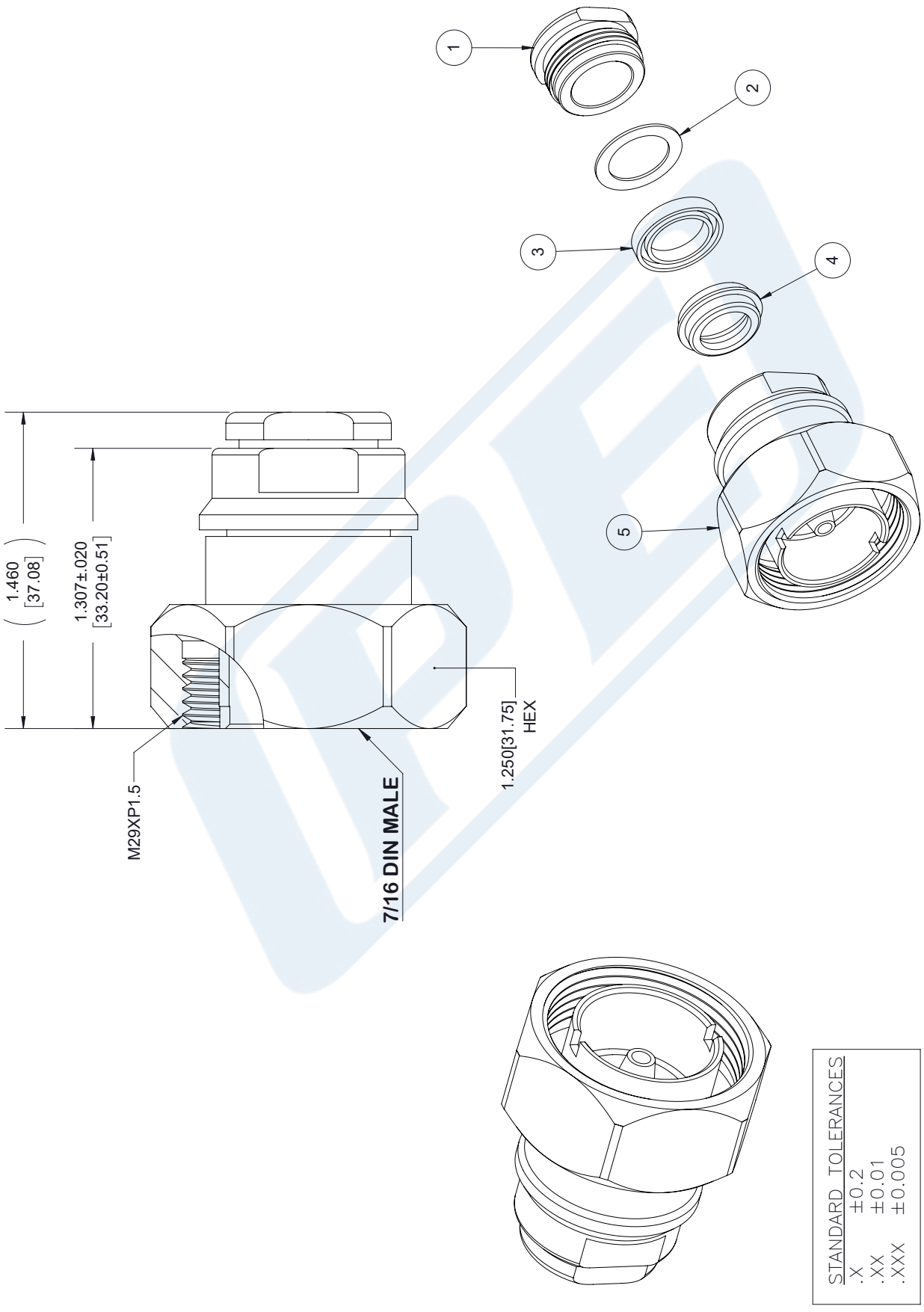

STANDARD TOLERANCES	
.X	±0.2
.XX	±0.01
.XXX	±0.005

*STANDARD TOLERANCES APPLY ONLY TO DIMENSIONS IN INCHES

NOTES:
1. UNLESS OTHERWISE SPECIFIED ALL DIMENSIONS ARE NOMINAL.
2. ALL SPECIFICATIONS ARE SUBJECT TO CHANGE WITHOUT NOTICE AT ANY TIME
3. DIMENSIONS ARE IN INCHES [mm].

DWG TITLE PE4567

CAD FILE 111317 | SCALE N/A | SIZE A | 7361

CAGE CODE 53919

PASTERNACK®
THE ENGINEER'S RF SOURCE
Pasternack Enterprises, Inc.
P.O. Box 16759 | Irvine | CA | 92623
Phone: (949) 261-1920 | **Fax:** (949) 261-7451
Website: www.pasternack.com | **E-Mail:** sales@pasternack.com

© 2018 Pasternack Enterprises All Rights Reserved

PASTERNACK®
THE ENGINEER'S RF SOURCE

C Male Connector Clamp/Solder Attachment for RG213, RG214, RG8, RG9, RG11, RG225, RG393, RG144, RG216, RG215

RF Connectors
Technical Data Sheet

PE4243

Configuration

- C Male Connector
- MIL-STD-348A
- 50 Ohms
- Straight Body Geometry
- RG213, RG214, RG8, RG9, RG11, RG225, RG393, RG144, RG216, RG215 Interface Type
- Clamp/Solder Attachment

Features

- Max. Operating Frequency 6 GHz
- Good VSWR of 1.3:1
- Gold Plated Brass Contact
- 30 µin minimum contact plating

Applications

- General Purpose Test
- Custom Cable Assemblies

Description

Pasternack's PE4243 type C male connector with clamp/solder attachment for RG213, RG214, RG8, RG9, RG11, RG225, RG393, RG144, RG216 and RG215 is part of our full line of RF components available for same-day shipping. Our type C male connector operates up to a maximum frequency of 6 GHz and offers good VSWR of 1.3:1.

Our type C male connector PE4243 datasheet specifications and drawing with dimensions are shown below in this PDF. Pasternack's broad catalog of RF, microwave and millimeter wave connectors allows designers to configure and customize their signal connections however they like. Whether the need is to provide an I/O for a board design, or simply create a custom cable assembly configuration, Pasternack has the right connector for the job. Pasternack can also expertly build your custom cable assemblies for you and ship same-day.

Electrical Specifications

Description	Minimum	Typical	Maximum	Units
Frequency Range	DC		6	GHz
VSWR			1.3:1	
Operating Voltage (AC)			1,000	Vrms

Mechanical Specifications

Size

Length	1.5 in [38.1 mm]
Width/Dia.	0.75 in [19.05 mm]
Weight	0.106 lbs [48.08 g]

Click the following link (or enter part number in "SEARCH" on website) to obtain additional part information including price, inventory and certifications: C Male Connector Clamp/Solder Attachment for RG213, RG214, RG8, RG9, RG11, RG225, RG393, RG144, RG216, RG215 PE4243

Pasternack Enterprises, Inc. • P.O. Box 16759, Irvine, CA 92623
Phone: (866) 727-8376 or (949) 261-1920 • **Fax:** (949) 261-7451
Sales@Pasternack.com • Techsupport@Pasternack.com

© 2018 Pasternack Enterprises All Rights Reserved

C Male Connector Clamp/Solder Attachment for RG213, RG214, RG8, RG9, RG11, RG225, RG393, RG144, RG216, RG215

Material Specifications

Description	Material	Plating
Contact	Brass	Gold 30 µin minimum
Insulation	PTFE	
Body	Brass	Nickel 100 µin minimum
Coupling Nut	Brass	Nickel 100 µin minimum

Environmental Specifications

Temperature

Operating Range -65 to +165 deg C

Compliance Certifications (see product page for current document)

Plotted and Other Data

Notes:

C Male Connector Clamp/Solder Attachment for RG213, RG214, RG8, RG9, RG11, RG225, RG393, RG144, RG216, RG215 from Pasternack Enterprises has same day shipment for domestic and International orders. Our RF, microwave and millimeter wave products maintain a 99.4% availability and are part of the broadest selection in the industry.

Click the following link (or enter part number in "SEARCH" on website) to obtain additional part information including price, inventory and certifications: C Male Connector Clamp/Solder Attachment for RG213, RG214, RG8, RG9, RG11, RG225, RG393, RG144, RG216, RG215 PE4243

URL: https://www.pasternack.com/c-male-standard-rg213-rg214-rg8-rg9-rg11-rg225-rg393-connector-pe4243-p.aspx

The information contained in this document is accurate to the best of our knowledge and representative of the part described herein. It may be necessary to make modifications to the part and/or the documentation of the part, in order to implement improvements. Pasternack reserves the right to make such changes as required. Unless otherwise stated, all specifications are nominal. Pasternack does not make any representation or warranty regarding the suitability of the part described herein for any particular purpose, and Pasternack does not assume any liability arising out of the use of any part or documentation.

Pasternack Enterprises, Inc. • P.O. Box 16759, Irvine, CA 92623
Phone: (866) 727-8376 or (949) 261-1920 • **Fax:** (949) 261-7451
Sales@Pasternack.com • Techsupport@Pasternack.com

© 2018 Pasternack Enterprises All Rights Reserved

PE4243 CAD Drawing

C Male Connector Clamp/Solder Attachment for RG213, RG214, RG8, RG9, RG11, RG225, RG393, RG144, RG216, RG215

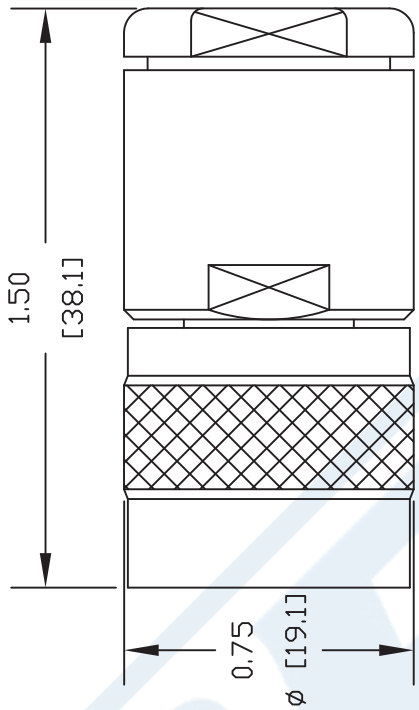

ASSEMBLY PROCEDURES

1. SLIDE CLAMP NUT (1) & GASKET (2) OVER CABLE. STRIP CABLE AS SHOWN. DO NOT NICK BRAID WHILE CUTTING JACKET. TAPER END OF BRAID TO PERMIT ASSEMBLY OF BRAID CLAMP (3) SLIDE BRAID CLAMP(3) OVER BRAID & SEAT AGAINST CABLE.

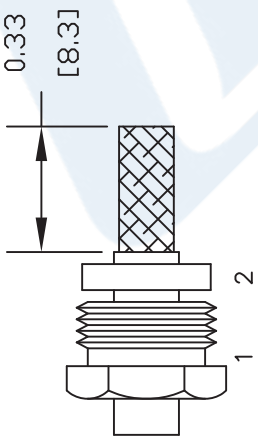

2. FORM BRAID OVER CLAMP NUT (3). TRIM BRAID BACK TO SHOULDER. CUT DIELECTRIC TO DIMENSION SHOWN. DO NOT NICK CENTER CONDUCTOR. SOLDER CONTACT TO CENTER CONDUCTOR. REMOVE EXCESS SOLDER. DO NOT OVER HEAT DIELECTRIC. INSERT CABLE ASSEMBLY INTO BODY & TIGHTEN.

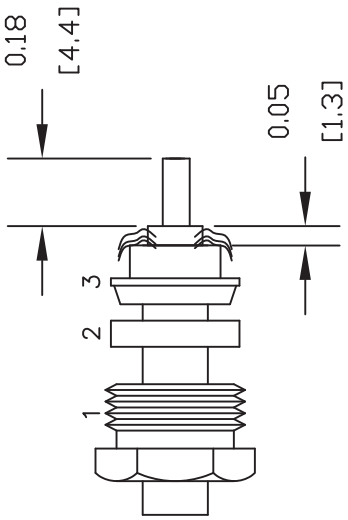

NOTES:
1. UNLESS OTHERWISE SPECIFIED ALL DIMENSIONS ARE NOMINAL.
2. ALL SPECIFICATIONS ARE SUBJECT TO CHANGE WITHOUT NOTICE AT ANY TIME.
3. DIMENSIONS ARE IN INCHES [mm].
4. FITS MIL-C-17 AND EQUIVALENT CABLES.

DWG TITLE **PE4243**

REV. - | FSCM NO. 53919 | CAD FILE 042309 | SCALE N/A | SIZE A | 147

PASTERNACK®
Pasternack Enterprises, Inc.
P.O. Box 16759 | Irvine | CA | 92623
Phone: (949) 261-1920 | **Fax:** (949) 261-7451
Website: www.pasternack.com | **E-Mail:** sales@pasternack.com

© 2018 Pasternack Enterprises All Rights Reserved

PASTERNACK®
THE ENGINEER'S RF SOURCE

Flexible RG393 Coax Cable Double Shielded with Tan FEP Jacket

RF Cables
Technical Data Sheet

RG393/U

Configuration

- Flexible Cable
- 2 Shield(s)

Features

- 50 Ohm Impedance
- Stranded Silver Plated Copper center conductor
- PTFE dielectric
- Double Silver Plated Copper Braid
- FEP Jacket Material 0.390 in diameter
-

Electrical Specifications

Description	Minimum	Typical	Maximum	Units
Frequency Range	DC		10	GHz
Impedance		50		Ohms
Velocity of Propagation		69.5		%
Nominal Capacitance		29.4 [96.46]		pF/ft [pF/m]

Performance by Frequency Band

Description	F1	F2	F3	F4	F5	Units
Frequency	0.01	0.1	1	5	10	GHz
Attenuation, Typ	0.6	2.1	7.5	21	35	dB/100ft
	1.97	6.89	24.61	68.9	114.83	dB/100m
Input Power (CW), Max	25,000	6,300	1,700	620	350	Watts

Mechanical Specifications

Diameter	0.39 in [9.91 mm]
Weight	0.1575 lbs/ft [0.23 Kg/m]
Min. Bend Radius (Repeated)	3.9 in [99.06 mm]

Construction Specifications

Description	Material and Plating	Diameter
Inner Conductor	Copper, Silver, 7 Strands	0.094 in [2.39 mm]
Conductor Type	Stranded	

Click the following link (or enter part number in "SEARCH" on website) to obtain additional part information including price, inventory and certifications: Flexible RG393 Coax Cable Double Shielded with Tan FEP Jacket RG393/U

Pasternack Enterprises, Inc. • P.O. Box 16759, Irvine, CA 92623
Phone: (866) 727-8376 or (949) 261-1920 • **Fax:** (949) 261-7451
Sales@Pasternack.com • Techsupport@Pasternack.com

© 2018 Pasternack Enterprises All Rights Reserved

Flexible RG393 Coax Cable Double Shielded with Tan FEP Jacket

Dielectric	PTFE	0.285 in [7.24 mm]
First Shield	Silver Plated Copper Braid 90% coverage	0.313 in [7.95 mm]
Second Shield	Silver Plated Copper Braid 90% coverage	0.341 in [8.66 mm]
Jacket	FEP, Tan	0.39 in [9.91 mm]

Environmental Specifications

Temperature

Operating Range -55 to +200 deg C

Compliance Certifications (see product page for current document)

Plotted and Other Data

Notes:

Flexible RG393 Coax Cable Double Shielded with Tan FEP Jacket from Pasternack Enterprises has same day shipment for domestic and International orders. Our RF, microwave and millimeter wave products maintain a 99.4% availability and are part of the broadest selection in the industry.

Click the following link (or enter part number in "SEARCH" on website) to obtain additional part information including price, inventory and certifications: Flexible RG393 Coax Cable Double Shielded with Tan FEP Jacket RG393/U

URL: https://www.pasternack.com/flexible-rg393u-fep-jacket-silver-plated-copper-braid-over-silver-plated-copper-braid-outer-conductor-double-shielded-rg393-u-p.aspx

The information contained in this document is accurate to the best of our knowledge and representative of the part described herein. It may be necessary to make modifications to the part and/or the documentation of the part, in order to implement improvements. Pasternack reserves the right to make such changes as required. Unless otherwise stated, all specifications are nominal. Pasternack does not make any representation or warranty regarding the suitability of the part described herein for any particular purpose, and Pasternack does not assume any liability arising out of the use of any part or documentation.

Pasternack Enterprises, Inc. • P.O. Box 16759, Irvine, CA 92623
Phone: (866) 727-8376 or (949) 261-1920 • **Fax:** (949) 261-7451
Sales@Pasternack.com • Techsupport@Pasternack.com

© 2018 Pasternack Enterprises All Rights Reserved

RG393/U CAD Drawing

Flexible RG393 Coax Cable Double Shielded with Tan FEP Jacket

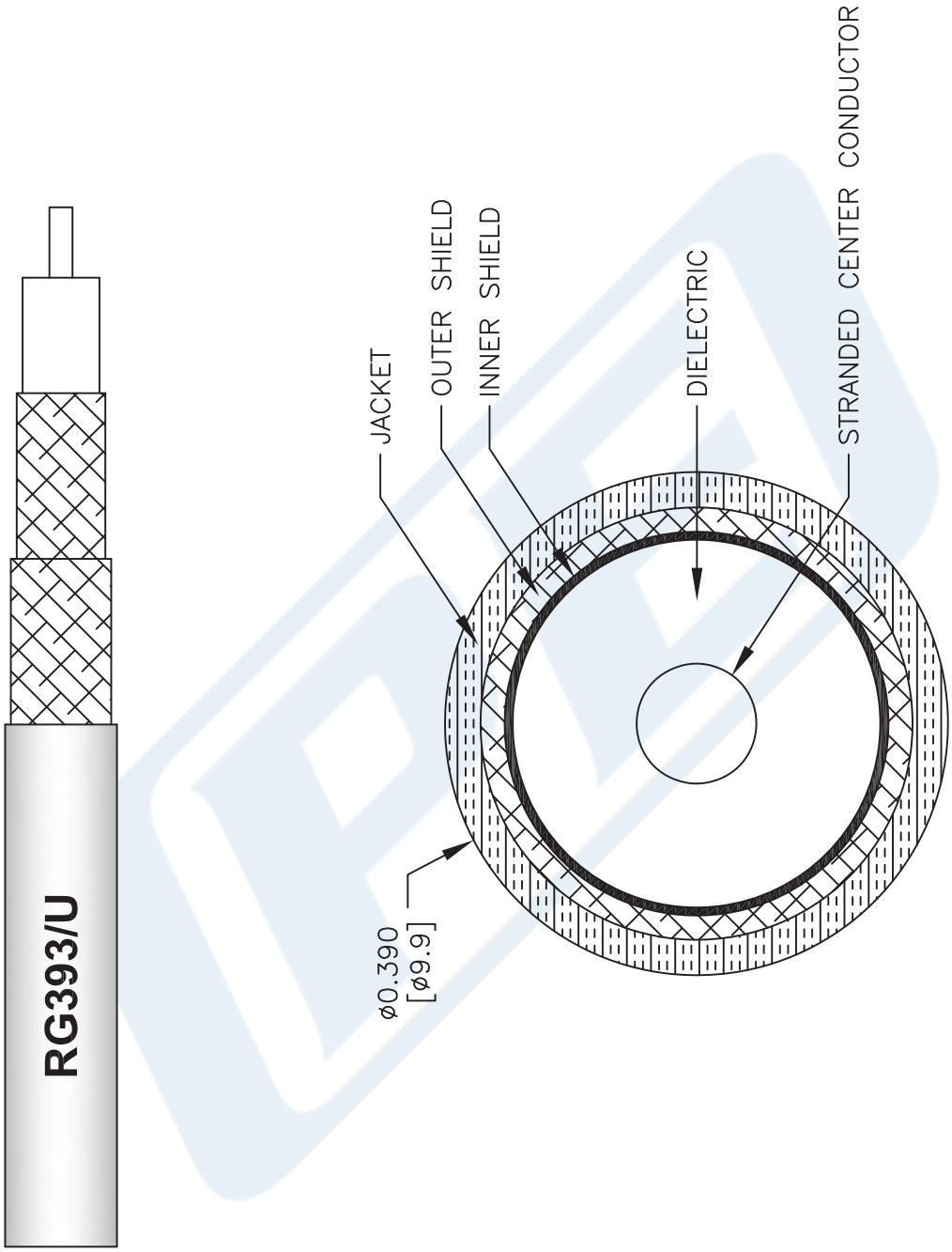

NOTES:
1. UNLESS OTHERWISE SPECIFIED ALL DIMENSIONS ARE NOMINAL.
2. ALL SPECIFICATIONS ARE SUBJECT TO CHANGE WITHOUT NOTICE AT ANY TIME.
3. DIMENSIONS ARE IN INCHES [mm].

DWG TITLE
RG393-U

FSCM NO. 53919

CAD FILE 111716 | SCALE N/A | SIZE A | 41742

PASTERNACK®
THE ENGINEER'S RF SOURCE
Pasternack Enterprises, Inc.
P.O. Box 16759 | Irvine | CA | 92623
Phone: (949) 261-1920 | **Fax:** (949) 261-7451
Website: www.pasternack.com | **E-Mail:** sales@pasternack.com

© 2018 Pasternack Enterprises All Rights Reserved