PASTERNACK®
THE ENGINEER'S RF SOURCE

75 Ohm F Female Bulkhead Mount Connector Crimp/Solder Attachment for RG179, RG187, .380 inch DD Hole

RF Connectors
Technical Data Sheet

PE45504

Configuration

- F Female Connector
- 75 Ohms
- Straight Body Geometry
- RG179, RG187 Interface Type
- Crimp/Solder Attachment
- Bulkhead

Features

- Gold Plated Brass Contact
- 30 µin minimum contact plating

Applications

- General Purpose Test
- Rack and Panel Mount Applications
- Custom Cable Assemblies
- CATV

Description

Pasternack's PE45504 75 ohm type F female bulkhead connector with crimp/solder attachment for RG179 and RG187 (.380 inch DD hole) is part of our full line of RF components available for same-day shipping. This type F bulkhead connector allows designers to create external connections on their product enclosures, and can be used in a variety of other rack mount and panel mount applications.

Our 75 ohm type F female bulkhead connector PE45504 datasheet specifications and drawing with dimensions are shown below in this PDF. Pasternack's broad catalog of RF, microwave and millimeter wave connectors allows designers to configure and customize their signal connections however they like. Whether the need is to provide an I/O for a board design, or simply create a custom cable assembly configuration, Pasternack has the right connector for the job. Pasternack can also expertly build your custom cable assemblies for you and ship same-day.

Mechanical Specifications

Size

Length	1.245 in [31.62 mm]
Width/Dia.	0.509 in [12.93 mm]
Weight	0.021 lbs [9.53 g]

Material Specifications

Description	Material	Plating
Contact	Brass	Gold 30 µin minimum
Insulation	PTFE	
Body	Brass	Nickel 100 µin minimum

Click the following link (or enter part number in "SEARCH" on website) to obtain additional part information including price, inventory and certifications: 75 Ohm F Female Bulkhead Mount Connector Crimp/Solder Attachment for RG179, RG187, .380 inch DD Hole PE45504

Pasternack Enterprises, Inc. • P.O. Box 16759, Irvine, CA 92623
Phone: (866) 727-8376 or (949) 261-1920 • **Fax:** (949) 261-7451
Sales@Pasternack.com • Techsupport@Pasternack.com

© 2018 Pasternack Enterprises All Rights Reserved

75 Ohm F Female Bulkhead Mount Connector Crimp/Solder Attachment for RG179, RG187, .380 inch DD Hole

Environmental Specifications

Compliance Certifications (see product page for current document)

Plotted and Other Data

Notes:

Click the following link (or enter part number in "SEARCH" on website) to obtain additional part information including price, inventory and certifications: 75 Ohm F Female Bulkhead Mount Connector Crimp/Solder Attachment for RG179, RG187, .380 inch DD Hole PE45504

Pasternack Enterprises, Inc. • P.O. Box 16759, Irvine, CA 92623
Phone: (866) 727-8376 or (949) 261-1920 • **Fax:** (949) 261-7451
Sales@Pasternack.com • Techsupport@Pasternack.com

© 2018 Pasternack Enterprises All Rights Reserved

75 Ohm F Female Bulkhead Mount Connector Crimp/Solder Attachment for RG179, RG187, .380 inch DD Hole

Assembly Instruction

*

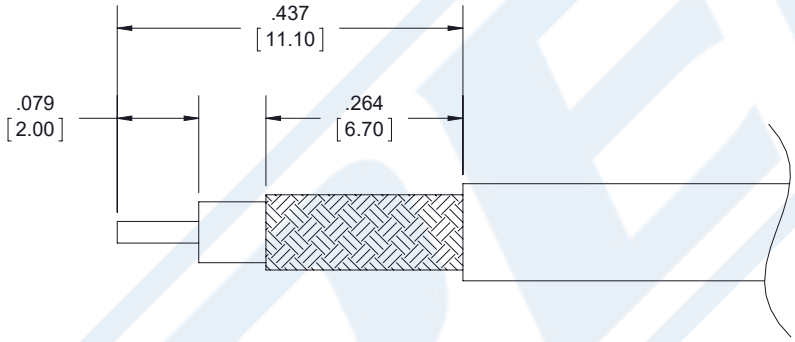

ASSEMBLY PROCEDURES

1. STRIP CABLE TO THE DIMENSIONS SHOWN, DO NOT NICK CENTER CONDUCTOR OR BRAID.
2. PUSH CENTER CONDUCTOR FULLY INTO CONTACT AND SOFT SOLDER CENTER CONDUCTOR IN PLACE.
3. FLARE BRAID AND INSERT THE BODY UNTIL IT SEATS.
4. SLIDE FERRULE OVER BRAID AND CRIMP WITH CRIMP TOOL.

CRIMP SIZE REQUIRED

- CONTACT: SOLDER.
- FERRULE: .128 [3.25] HEX CRIMP TOOL.

Click the following link (or enter part number in "SEARCH" on website) to obtain additional part information including price, inventory and certifications: 75 Ohm F Female Bulkhead Mount Connector Crimp/Solder Attachment for RG179, RG187, .380 inch DD Hole PE45504

Pasternack Enterprises, Inc. • P.O. Box 16759, Irvine, CA 92623
Phone: (866) 727-8376 or (949) 261-1920 • **Fax:** (949) 261-7451
Sales@Pasternack.com • Techsupport@Pasternack.com

© 2018 Pasternack Enterprises All Rights Reserved

75 Ohm F Female Bulkhead Mount Connector Crimp/Solder Attachment for RG179, RG187, .380 inch DD Hole

RF Connectors
Technical Data Sheet

PE45504

75 Ohm F Female Bulkhead Mount Connector Crimp/Solder Attachment for RG179, RG187, .380 inch DD Hole from Pasternack Enterprises has same day shipment for domestic and International orders. Our RF, microwave and millimeter wave products maintain a 99.4% availability and are part of the broadest selection in the industry.

Click the following link (or enter part number in "SEARCH" on website) to obtain additional part information including price, inventory and certifications: 75 Ohm F Female Bulkhead Mount Connector Crimp/Solder Attachment for RG179, RG187, .380 inch DD Hole PE45504

URL: https://www.pasternack.com/f-female-rg179-rg187-connector-pe45504-p.aspx

The information contained in this document is accurate to the best of our knowledge and representative of the part described herein. It may be necessary to make modifications to the part and/or the documentation of the part, in order to implement improvements. Pasternack reserves the right to make such changes as required. Unless otherwise stated, all specifications are nominal. Pasternack does not make any representation or warranty regarding the suitability of the part described herein for any particular purpose, and Pasternack does not assume any liability arising out of the use of any part or documentation.

Pasternack Enterprises, Inc. • P.O. Box 16759, Irvine, CA 92623
Phone: (866) 727-8376 or (949) 261-1920 • **Fax:** (949) 261-7451
Sales@Pasternack.com • Techsupport@Pasternack.com

© 2018 Pasternack Enterprises All Rights Reserved

PE45504 CAD Drawing

75 Ohm F Female Bulkhead Mount Connector Crimp/Solder
Attachment for RG179, RG187, .380 inch DD Hole

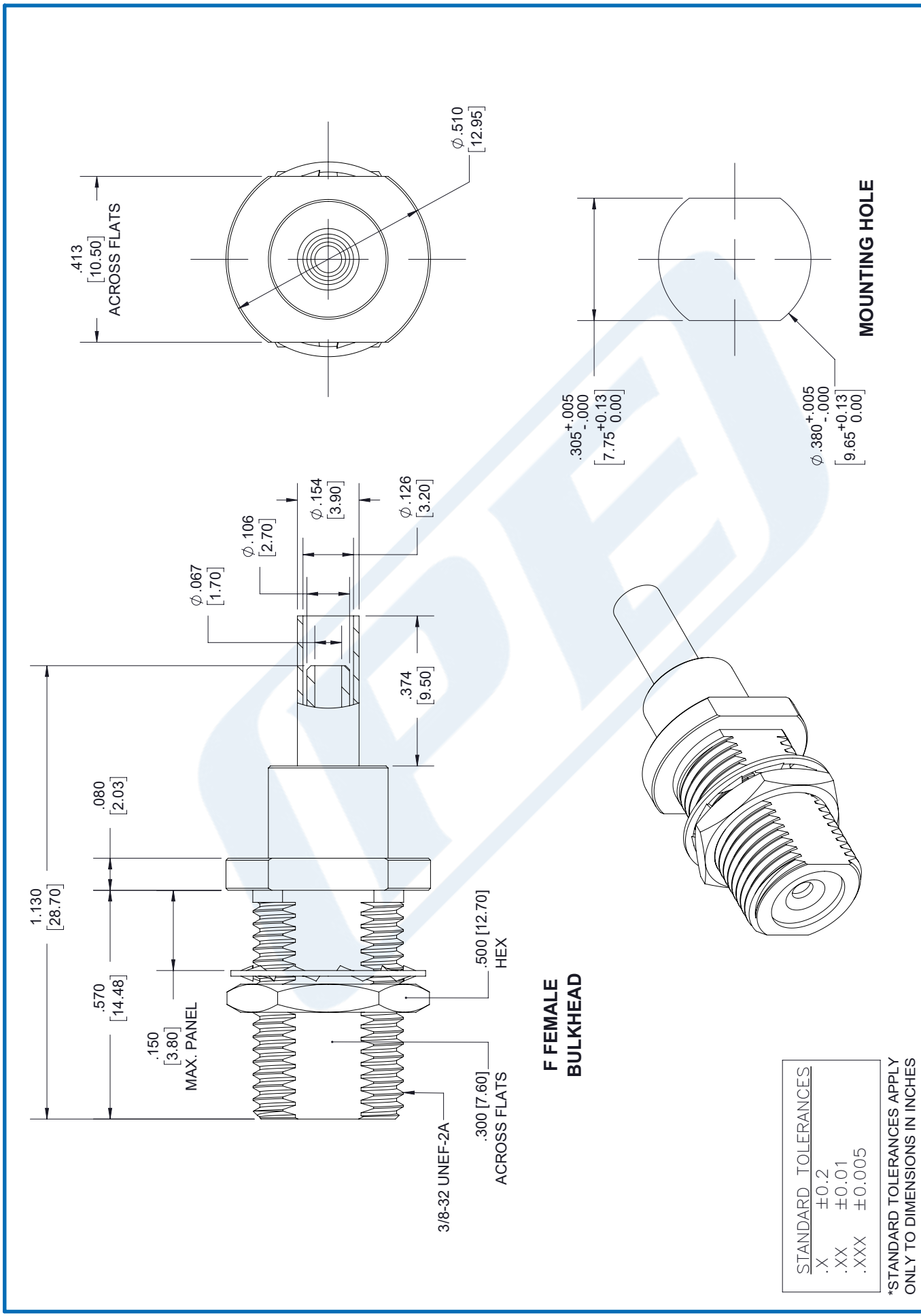

© 2018 Pasternack Enterprises All Rights Reserved

MATERIALS	
BODY	BRASS NICKEL PLATED
CONTACT	GOLD PLATED
INSULATOR	PTFE

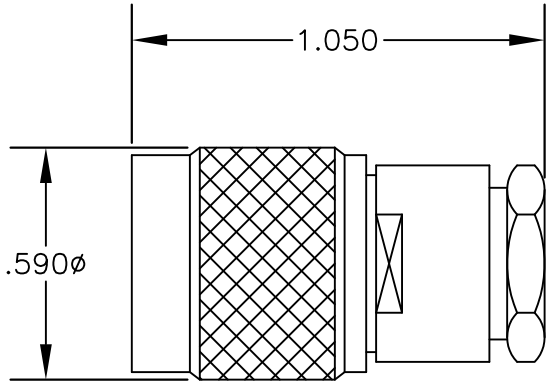

ASSEMBLY PROCEDURES

1. SLIDE CLAMP NUT (1), WASHER (2) & GASKET (3) OVER CABLE. STRIP CABLE AS SHOWN. DO NOT NICK BRAID WHILE CUTTING JACKET. TAPER END OF BRAID TO PERMIT ASSEMBLY OF BRAID CLAMP (4). SLIDE BRAID CLAMP (4) OVER BRAID & SEAT AGAINST CABLE.

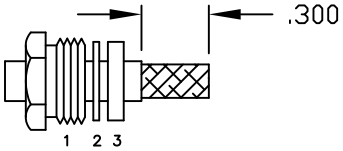

2. FORM BRAID OVER CLAMP NUT (4). TRIM BRAID BACK TO SHOULDER. CUT DIELECTRIC & CENTER CONDUCTOR TO DIMENSION SHOWN. DO NOT NICK CENTER CONDUCTOR. SOLDER CONTACT TO CENTER CONDUCTOR. REMOVE EXCESS SOLDER. DO NOT OVER HEAT DIELECTRIC. INSERT CABLE ASSEMBLY INTO BODY & TIGHTEN.

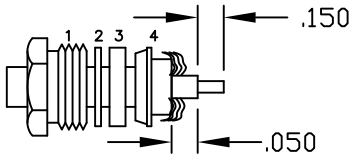

NOTE: INSERT PTFE BEFORE CONTACT. WITH LARGE OPEN END SLIDING OVER CENTER CONDUCTOR & DIELECTRIC.

PASTERNACK ENTERPRISES®
ESTABLISHED 1972

PASTERNACK ENTERPRISES, INC.
P.O BOX 16759, IRVINE, CA 92623
PHONE (949) 261-1920 FAX (949) 261-7451

WEB ADDRESS: www.pasternack.com
E-MAIL ADDRESS: sales@pasternack.com

COAXIAL & FIBER OPTICS

DWG TITLE	DES.
PE44167	"75 OHM TNC" MALE, CLAMP ATTACHMENT FOR RG179 & RG187

SIZE A	FSCM NO. 53919	CAD FILE 062702	SCALE N/A		127

NOTES:
1. UNLESS OTHERWISE SPECIFIED ALL DIMENSIONS ARE NOMINAL.
2. ALL SPECIFICATIONS ARE SUBJECT TO CHANGE WITHOUT NOTICE AT ANY TIME.

75 Ohm Flexible RG179 Coax Cable Single Shielded with Tan FEP Jacket

Configuration

- Flexible Cable
- 1 Shield(s)

Electrical Specifications

Description	Minimum	Typical	Maximum	Units
Frequency Range	DC		3	GHz
Impedance		75		Ohms
Velocity of Propagation		70		%
Operating Voltage (AC)			900	Vrms
Nominal Capacitance		19.4 [63.65]		pF/ft [pF/m]

Performance by Frequency Band

Description	F1	F2	F3	F4	F5	Units
Frequency	100	400	1,000			MHz
Attenuation, Typ	9.06	18.4	30			dB/100ft
	29.72	60.37	98.43			dB/100m

Mechanical Specifications

Diameter	0.1 in [2.54 mm]
Weight	0.01 lbs/ft [0.01 Kg/m]
Min. Bend Radius (Repeated)	0.4 in [10.16 mm]

Construction Specifications

Description	Material and Plating	Diameter
Inner Conductor	Copper Clad Steel, Silver, 7 Strands	0.012 in [0.3 mm]
Conductor Type	Stranded	
Dielectric	PTFE	0.063 in [1.6 mm]
First Shield	Silver Plated Copper Braid	0.08 in [2.03 mm]

Click the following link (or enter part number in “SEARCH” on website) to obtain additional part information including price, inventory and certifications: 75 Ohm Flexible RG179 Coax Cable Single Shielded with Tan FEP Jacket RG179B/U

Pasternack Enterprises, Inc. • P.O. Box 16759, Irvine, CA 92623
Phone: (866) 727-8376 or (949) 261-1920 • **Fax:** (949) 261-7451
Sales@Pasternack.com • Techsupport@Pasternack.com

© 2017 Pasternack Enterprises All Rights Reserved

75 Ohm Flexible RG179 Coax Cable Single Shielded with Tan FEP Jacket

Jacket	FEP, Tan	0.1 in [2.54 mm]

Environmental Specifications

Temperature

Operating Range	-55 to +200 deg C

Compliance Certifications (see product page for current document)

Plotted and Other Data

Notes:

75 Ohm Flexible RG179 Coax Cable Single Shielded with Tan FEP Jacket from Pasternack Enterprises has same day shipment for domestic and International orders. Our RF, microwave and millimeter wave products maintain a 99.4% availability and are part of the broadest selection in the industry.

Click the following link (or enter part number in "SEARCH" on website) to obtain additional part information including price, inventory and certifications: 75 Ohm Flexible RG179 Coax Cable Single Shielded with Tan FEP Jacket RG179B/U

URL: https://www.pasternack.com/flexible-0.100-rg179-75-ohm-coax-cable-fep-jacket-rg179b-u-p.aspx

The information contained in this document is accurate to the best of our knowledge and representative of the part described herein. It may be necessary to make modifications to the part and/or the documentation of the part, in order to implement improvements. Pasternack reserves the right to make such changes as required. Unless otherwise stated, all specifications are nominal. Pasternack does not make any representation or warranty regarding the suitability of the part described herein for any particular purpose, and Pasternack does not assume any liability arising out of the use of any part or documentation.

Pasternack Enterprises, Inc. • P.O. Box 16759, Irvine, CA 92623
Phone: (866) 727-8376 or (949) 261-1920 • **Fax:** (949) 261-7451
Sales@Pasternack.com • Techsupport@Pasternack.com

© 2017 Pasternack Enterprises All Rights Reserved

RG179B/U CAD Drawing

75 Ohm Flexible RG179 Coax Cable Single Shielded with Tan FEP Jacket

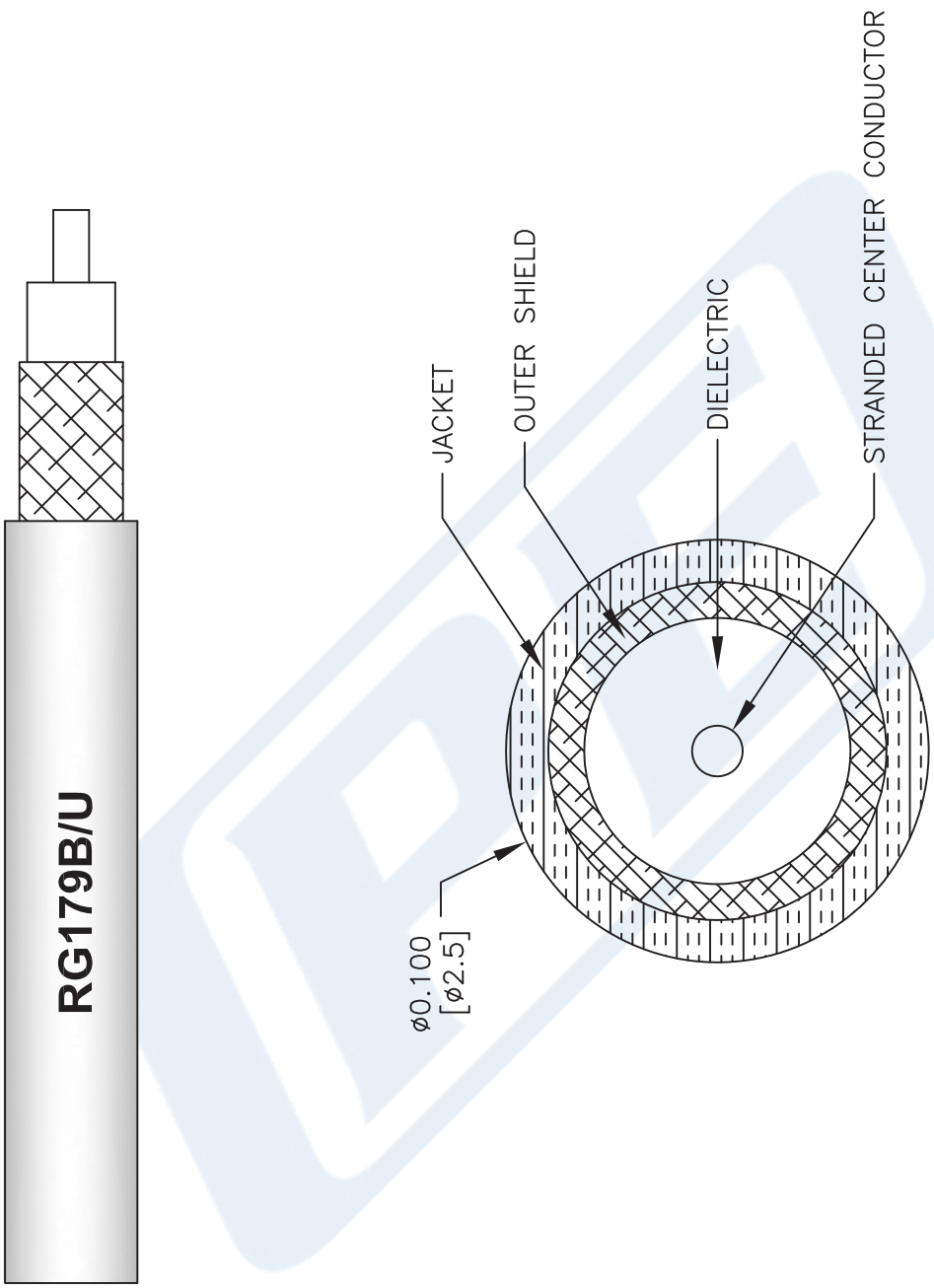

NOTES:
1. UNLESS OTHERWISE SPECIFIED ALL DIMENSIONS ARE NOMINAL.
2. ALL SPECIFICATIONS ARE SUBJECT TO CHANGE WITHOUT NOTICE AT ANY TIME.
3. DIMENSIONS ARE IN INCHES [mm].

DWG TITLE
RG179B/U

FSCM NO. 53919

CAD FILE 111716 | SCALE N/A | SIZE A | 41742

PASTERNACK®
THE ENGINEER'S RF SOURCE
Pasternack Enterprises, Inc.
P.O. Box 16759 | Irvine | CA | 92623
Phone: (949) 261-1920 | **Fax:** (949) 261-7451
Website: www.pasternack.com | **E-Mail:** sales@pasternack.com

© 2017 Pasternack Enterprises All Rights Reserved