PASTERNACK
an INFINITE brand

SMP Female Right Angle Connector Solder Attachment for RG405, PE-SR405FL, PE-SR405FLJ, Round Body

RF Connectors
Technical Data Sheet

PE44915

Configuration

- SMP Female Connector
- DESC 94008
- 50 Ohms
- Right Angle Body Geometry
- Connector Interface Types: RG405, PE-SR405FL, PE-SR405FLJ

Features

- Max. Operating Frequency 30 GHz
- Excellent VSWR of 1.25:1
- Gold Plated Beryllium Copper Contact
- Contact plating according to MIL-G-45204
- Blind Mate Connector

Applications

- General Purpose Test
- Custom Cable Assemblies

Description

Pasternack's PE44915 SMP female right angle connector with solder attachment for RG405, PE-SR405FL and PE-SR405FLJ is part of our full line of RF components available for same-day shipping. Our SMP female connector operates up to a maximum frequency of 30 GHz and offers excellent VSWR of 1.25:1. The Pasternack blind mate connector is ideal for applications where direct visual or tactile access to the connection point is not possible, for example, when two circuit boards need to be mated. Its right angle body geometry allows for easier connections in tight spaces.

Our SMP female right angle connector PE44915 datasheet specifications and drawing with dimensions are shown below in this PDF. Pasternack's broad catalog of RF, microwave and millimeter wave connectors allows designers to configure and customize their signal connections however they like. Whether the need is to provide an I/O for a board design, or simply create a custom cable assembly configuration, Pasternack has the right connector for the job. Pasternack can also expertly build your custom cable assemblies for you and ship same-day.

Electrical Specifications

Description	Minimum	Typical	Maximum	Units
Frequency Range	DC		30	GHz
VSWR			1.25:1	

Performance by Frequency

Description	F1	F2	F3	F4	F5	Units
Frequency Range	DC to 18	18 to 30				GHz
VSWR, Max	1.15:1	1.25:1				

Click the following link (or enter part number in "SEARCH" on website) to obtain additional part information including price, inventory and certifications: SMP Female Right Angle Connector Solder Attachment for RG405, PE-SR405FL, PE-SR-405FLJ, Round Body PE44915

Pasternack Enterprises, Inc. • P.O. Box 16759, Irvine, CA 92623
Phone: (866) 727-8376 or (949) 261-1920 • **Fax:** (949) 261-7451
Sales@Pasternack.com • Techsupport@Pasternack.com

© 2019 Pasternack Enterprises All Rights Reserved

SMP Female Right Angle Connector Solder Attachment for RG405, PE-SR405FL, PE-SR405FLJ, Round Body

Mechanical Specifications

Size

Length	0.265 in [6.73 mm]
Width/Dia.	0.188 in [4.78 mm]
Weight	0.002 lbs [0.91 g]

Material Specifications

Description	Material	Plating
Contact	Beryllium Copper	Gold MIL-G-45204
Insulation	PTFE	
Body	Beryllium Copper	Gold MIL-G-45204

Environmental Specifications

Compliance Certifications (see product page for current document)

Plotted and Other Data

Notes:

SMP Female Right Angle Connector Solder Attachment for RG405, PE-SR405FL, PE-SR405FLJ, Round Body from Pasternack Enterprises has same day shipment for domestic and International orders. Our RF, microwave and millimeter wave products maintain a 99.4% availability and are part of the broadest selection in the industry.

Click the following link (or enter part number in “SEARCH” on website) to obtain additional part information including price, inventory and certifications: SMP Female Right Angle Connector Solder Attachment for RG405, PE-SR405FL, PE-SR405FLJ, Round Body PE44915

URL: https://www.pasternack.com/smp-female-standard-rg405-pe-sr405fl-pe-sr405flj-connector-pe44915-p.aspx

The information contained in this document is accurate to the best of our knowledge and representative of the part described herein. It may be necessary to make modifications to the part and/or the documentation of the part, in order to implement improvements. Pasternack reserves the right to make such changes as required. Unless otherwise stated, all specifications are nominal. Pasternack does not make any representation or warranty regarding the suitability of the part described herein for any particular purpose, and Pasternack does not assume any liability arising out of the use of any part or documentation.

Pasternack Enterprises, Inc. • P.O. Box 16759, Irvine, CA 92623
Phone: (866) 727-8376 or (949) 261-1920 • **Fax:** (949) 261-7451
Sales@Pasternack.com • Techsupport@Pasternack.com

© 2019 Pasternack Enterprises All Rights Reserved

PE44915 CAD Drawing

SMP Female Right Angle Connector Solder Attachment for
RG405, PE-SR405FL, PE-SR405FLJ, Round Body

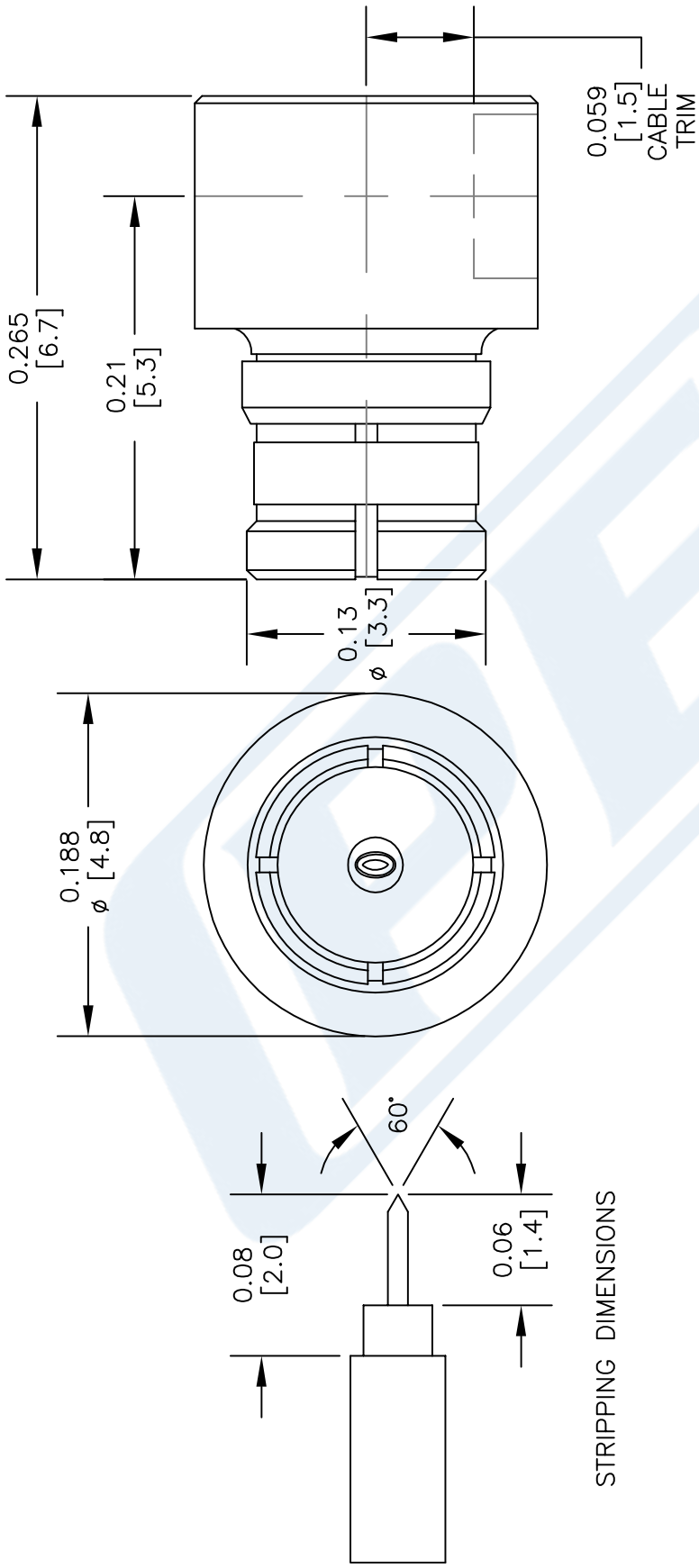

NOTES:
1. UNLESS OTHERWISE SPECIFIED ALL DIMENSIONS ARE NOMINAL.
2. ALL SPECIFICATIONS ARE SUBJECT TO CHANGE WITHOUT NOTICE AT ANY TIME.
3. DIMENSIONS ARE IN INCHES [mm].
4. FITS MIL-C-17 AND EQUIVALENT CABLES.

CAD FILE	102913	SCALE N/A	SIZE A	150

DWG TITLE **PE44915**

FSCM NO. 53919

PASTERNACK®
Pasternack Enterprises, Inc.
P.O. Box 16759 | Irvine | CA | 92623
Phone: (949) 261-1920 | **Fax:** (949) 261-7451
Website: www.pasternack.com | **E-Mail:** sales@pasternack.com

© 2019 Pasternack Enterprises All Rights Reserved

PASTERNACK
an INFINITE brand

SMA Male Connector Solder Attachment for RG405, RG405 Tinned, PE-SR405AL, PE-SR405FL, PE-SR405FLJ, PE-SR405TN

RF Connectors
Technical Data Sheet

PE45480

Configuration

- SMA Male Connector
- 50 Ohms
- Straight Body Geometry
- Connector Interface Types: RG405, RG405 Tinned, PE-SR405AL, PE-SR405FL, PE-SR405FLJ, PE-SR405TN

Features

- Max. Operating Frequency 26.5 GHz
- Excellent VSWR of 1.14:1
- Gold Plated Beryllium Copper Contact
- Contact plating according to ASTM-B488

Applications

- General Purpose Test
- Custom Cable Assemblies

Description

Pasternack's PE45480 SMA male connector with solder attachment for RG405, RG405 Tinned, PE-SR405AL, PE-SR405FL, PE-SR405FLJ and PE-SR405TN is part of our full line of RF components available for same-day shipping. Our SMA male connector operates up to a maximum frequency of 26.5 GHz and offers excellent VSWR of 1.14:1.

Our SMA male connector PE45480 datasheet specifications and drawing with dimensions are shown below in this PDF. Pasternack's broad catalog of RF, microwave and millimeter wave connectors allows designers to configure and customize their signal connections however they like. Whether the need is to provide an I/O for a board design, or simply create a custom cable assembly configuration, Pasternack has the right connector for the job. Pasternack can also expertly build your custom cable assemblies for you and ship same-day.

Electrical Specifications

Description	Minimum	Typical	Maximum	Units
Frequency Range	DC		26.5	GHz
VSWR			1.14:1	
Dielectric Withstanding Voltage (AC)			1,000	Vrms
High Potential Voltage			670	Vrms
Corona Discharge			250	Vrms
Insulation Resistance	5,000			MOhms
RF Leakage	-90			dB

Click the following link (or enter part number in "SEARCH" on website) to obtain additional part information including price, inventory and certifications: SMA Male Connector Solder Attachment for RG405, RG405 Tinned, PE-SR405AL, PE-SR-405FL, PE-SR405FLJ, PE-SR405TN PE45480

Pasternack Enterprises, Inc. • P.O. Box 16759, Irvine, CA 92623
Phone: (866) 727-8376 or (949) 261-1920 • **Fax:** (949) 261-7451
Sales@Pasternack.com • Techsupport@Pasternack.com

© 2020 Pasternack Enterprises All Rights Reserved

SMA Male Connector Solder Attachment for RG405, RG405 Tinned, PE-SR405AL, PE-SR405FL, PE-SR405FLJ, PE-SR405TN

Performance by Frequency

Description	F1	F2	F3	F4	F5	Units
Frequency Range	DC to 18	18 to 26.5				GHz
VSWR, Max	1.11:1	1.14:1				

Electrical Specification Notes:
Insertion Loss = 0.04*SQRT(Fghz) dB

Mechanical Specifications

Mating Cycles	500 Cycles
Mating Torque	7 to 10 in-lbs [0.79 to 1.13 Nm]

Material Specifications

Description	Material	Plating
Contact	Beryllium Copper	Gold ASTM-B488
Insulation	PTFE	
Body	Beryllium Copper	Gold ASTM-B488
Coupling Nut	Steel	
Gasket	Silicone Rubber	

Environmental Specifications

Temperature

Operating Range	-65 to +165 deg C
Shock	MIL-STD-202, Method 213, Condition I
Vibration	MIL-STD-202, Method 204, Condition D
Thermal Shock	MIL-STD-202, Method 107, Condition B

Compliance Certifications (see product page for current document)

Plotted and Other Data

Notes:

Click the following link (or enter part number in “SEARCH” on website) to obtain additional part information including price, inventory and certifications: SMA Male Connector Solder Attachment for RG405, RG405 Tinned, PE-SR405AL, PE-SR-405FL, PE-SR405FLJ, PE-SR405TN PE45480

Pasternack Enterprises, Inc. • P.O. Box 16759, Irvine, CA 92623
Phone: (866) 727-8376 or (949) 261-1920 • **Fax:** (949) 261-7451
Sales@Pasternack.com • Techsupport@Pasternack.com

© 2020 Pasternack Enterprises All Rights Reserved

SMA Male Connector Solder Attachment for RG405, RG405 Tinned, PE-SR405AL, PE-SR405FL, PE-SR405FLJ, PE-SR405TN

Assembly Instruction

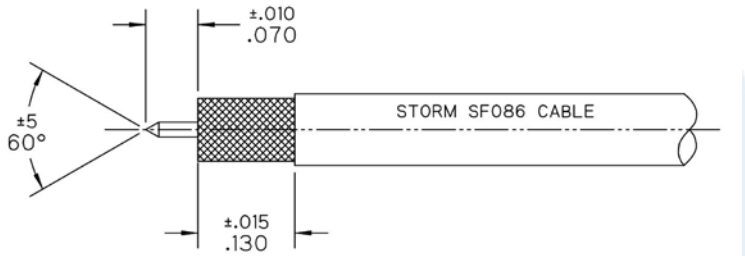

STEP 1:

- TRIM CABLE TO EXPOSE CENTER CONDUCTOR AND BRAID AS SHOWN.

STEP 2:

- INSERT CABLE INTO CONNECTOR UNTIL CENTER CONDUCTOR PLUGS IN AND CABLE FULLY SEATS IN CONNECTOR BORE.
- SOLDER BRAID TO BODY WHERE SHOWN APPLYING HEAT TO SHORT BODY TAIL SHOULDER INSIDE COUPLING NUT.

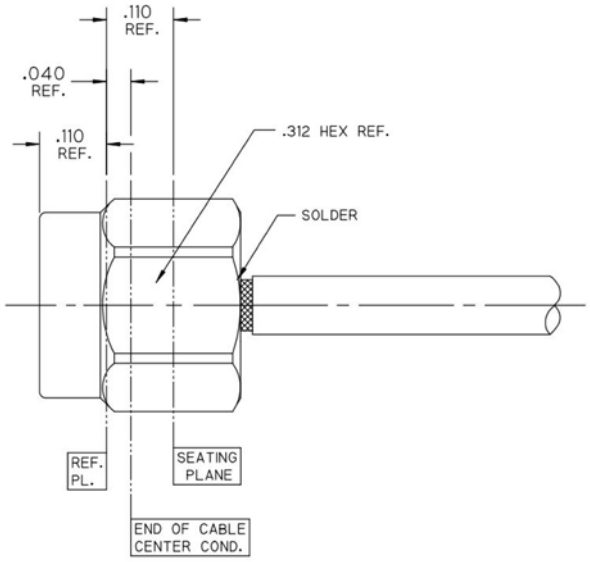

Click the following link (or enter part number in “SEARCH” on website) to obtain additional part information including price, inventory and certifications: SMA Male Connector Solder Attachment for RG405, RG405 Tinned, PE-SR405AL, PE-SR-405FL, PE-SR405FLJ, PE-SR405TN PE45480

Pasternack Enterprises, Inc. • P.O. Box 16759, Irvine, CA 92623
Phone: (866) 727-8376 or (949) 261-1920 • **Fax:** (949) 261-7451
Sales@Pasternack.com • Techsupport@Pasternack.com

© 2020 Pasternack Enterprises All Rights Reserved

SMA Male Connector Solder Attachment for RG405, RG405 Tinned, PE-SR405AL, PE-SR405FL, PE-SR405FLJ, PE-SR405TN

RF Connectors
Technical Data Sheet

PE45480

SMA Male Connector Solder Attachment for RG405, RG405 Tinned, PE-SR405AL, PE-SR405FL, PE-SR405FLJ, PE-SR405TN from Pasternack Enterprises has same day shipment for domestic and International orders. Our RF, microwave and millimeter wave products maintain a 99.4% availability and are part of the broadest selection in the industry.

Click the following link (or enter part number in “SEARCH” on website) to obtain additional part information including price, inventory and certifications: SMA Male Connector Solder Attachment for RG405, RG405 Tinned, PE-SR405AL, PE-SR405FL, PE-SR405FLJ, PE-SR405TN PE45480

URL: https://www.pasternack.com/sma-male-rg405-rg405-tinned-connector-pe45480-p.aspx

The information contained in this document is accurate to the best of our knowledge and representative of the part described herein. It may be necessary to make modifications to the part and/or the documentation of the part, in order to implement improvements. Pasternack reserves the right to make such changes as required. Unless otherwise stated, all specifications are nominal. Pasternack does not make any representation or warranty regarding the suitability of the part described herein for any particular purpose, and Pasternack does not assume any liability arising out of the use of any part or documentation.

Pasternack Enterprises, Inc. • P.O. Box 16759, Irvine, CA 92623
Phone: (866) 727-8376 or (949) 261-1920 • **Fax:** (949) 261-7451
Sales@Pasternack.com • Techsupport@Pasternack.com

© 2020 Pasternack Enterprises All Rights Reserved

PE45480 CAD Drawing

SMA Male Connector Solder Attachment for RG405, RG405 Tinned,
PE-SR405AL, PE-SR405FL, PE-SR405FLJ, PE-SR405TN

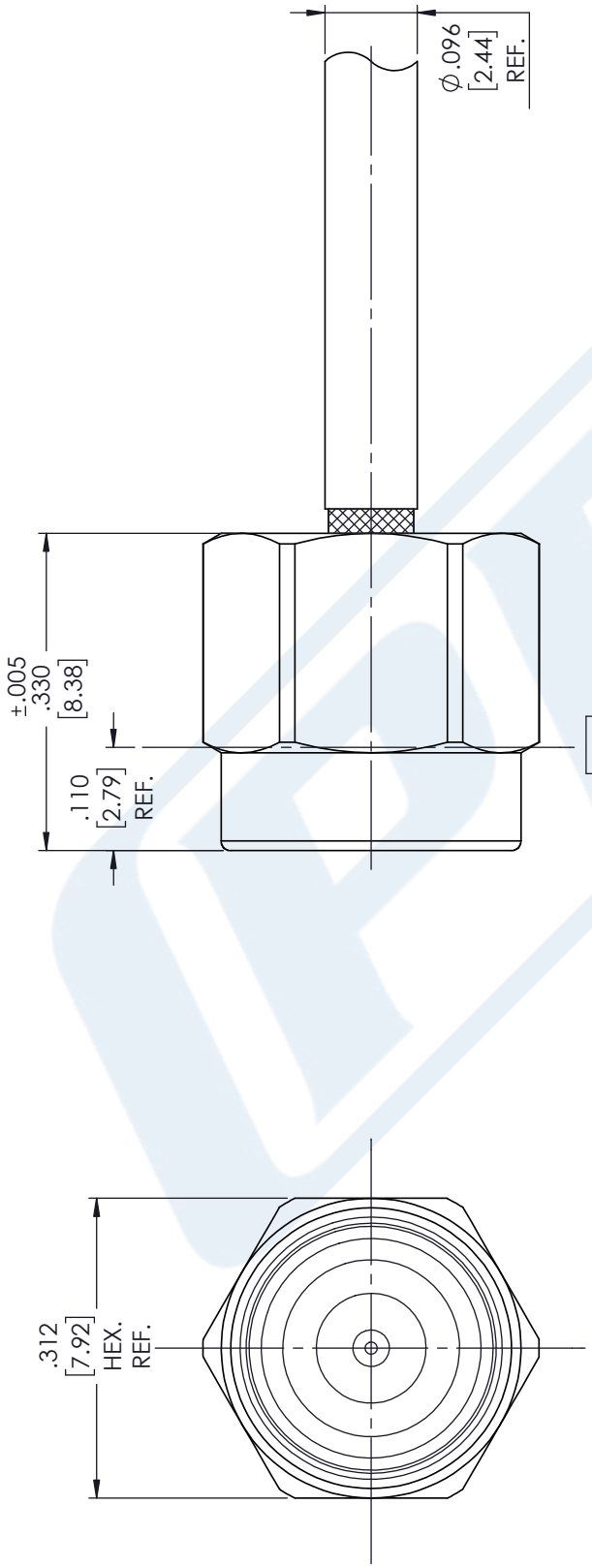

NOTES: DISTANCE FROM END OF CABLE
CENTER COND. TO REF. PL. IS .040

STANDARD TOLERANCES	
.X	±0.2
.XX	±0.01
.XXX	±0.005

*STANDARD TOLERANCES APPLY
ONLY TO DIMENSIONS IN INCHES

NOTES:
1. UNLESS OTHERWISE SPECIFIED ALL DIMENSIONS ARE NOMINAL.
2. ALL SPECIFICATIONS ARE SUBJECT TO CHANGE WITHOUT NOTICE AT ANY TIME.
3. DIMENSIONS ARE IN INCHES [mm].

DWG TITLE
PE45480

CAD FILE 07/26/18

SCALE N/A

SIZE A

CN2379

CAGE CODE 53919

PASTERNACK®
THE ENGINEER'S RF SOURCE
Pasternack Enterprises, Inc.
P.O. Box 16759 | Irvine | CA | 92623
Phone: (949) 261-1920 | **Fax:** (949) 261-7451
Website: www.pasternack.com | **E-Mail:** sales@pasternack.com

© 2020 Pasternack Enterprises All Rights Reserved

PASTERNACK®
www.pasternack.com

086 Semi-rigid Coax Cable with Copper Outer Conductor

TECHNICAL DATA SHEET RG405/U

086 Semi-rigid Coax Cable with Copper Outer Conductor

Configuration

Inner Conductor Material and Plating	Copper Clad Steel, Silver
Dielectric Type	PTFE
Shield Materials	Copper
Jacket Material and Color	Tan

Electrical Specifications

Impedance, Ohms	50
Maximum Operating Frequency, GHz	40
Dielectric Withstanding Voltage, Vrms	5,000

Electrical Specifications by Frequency

Frequency 1

Frequency, MHz	1000
Attenuation, dB/100ft [dB/100m]	22 [72.18]
Power Handling, Watts	130

Frequency 2

Frequency, GHz	10
Attenuation, dB/100ft [dB/100m]	80 [262.47]
Power Handling, Watts	35

Frequency 3

Frequency, GHz	20
Attenuation, dB/100ft [dB/100m]	120 [393.7]
Power Handling, Watts	20

Mechanical Specifications

Temperature

Operating Range, deg C	-55 to +125

Inner Conductor

Number of Strands	1
Material	Copper Clad Steel
Plating	Silver
Diameter, in [mm]	0.02 [0.51]

Dielectric:

Type	PTFE
Diameter, in [mm]	0.066 [1.68]

Click the following link (or enter part number in “SEARCH” on website) to obtain additional part information including price, inventory and certifications: 086 Semi-rigid Coax Cable with Copper Outer Conductor RG405/U

The information contained in this document is accurate to the best of our knowledge and representative of the part described herein. It may be necessary to make modifications to the part and/or the documentation of the part, in order to implement improvements. Pasternack reserves the right to make such changes as required. Unless otherwise stated, all specifications are nominal.

Pasternack Enterprises, Inc. • P.O. Box 16759, Irvine, CA 92623
Phone: (866) 727-8376 or (949) 261-1920 • **Fax:** (949) 261-7451
Sales@Pasternack.com • Techsupport@Pasternack.com

ISO 9001 : 2008 Registered

© 2013 Pasternack Enterprises All Rights Reserved

Shield:	
Number of	1
Material 1	Copper
Diameter, in [mm]	0.087 [2.21]
Jacket:	
Color	Tan
One Time Minimum Bend Radius, in [mm]	0.05 [1.27]
Weight, lbs/ft [Kg/m]	0.015 [0.02]

Compliance Certifications (visit www.Pasternack.com for current document)

RoHS Compliant	Yes

Plotted and Other Data

Notes:	Values at 25 °C, sea level

086 Semi-rigid Coax Cable with Copper Outer Conductor from Pasternack Enterprises has same day shipment for domestic and International orders. Our RF, microwave and fiber optic products maintain a 99% availability and are part of the broadest selection in the industry.

Click the following link (or enter part number in “SEARCH” on website) to obtain additional part information including price, inventory and certifications: 086 Semi-rigid Coax Cable with Copper Outer Conductor RG405/U

URL: http://www.pasternack.com/semirigid-0.085-rg405-50-ohm-coax-cable-copper-rg405-u-p.aspx

The information contained in this document is accurate to the best of our knowledge and representative of the part described herein. It may be necessary to make modifications to the part and/or the documentation of the part, in order to implement improvements. Pasternack reserves the right to make such changes as required. Unless otherwise stated, all specifications are nominal.

Pasternack Enterprises, Inc. • P.O. Box 16759, Irvine, CA 92623
Phone: (866) 727-8376 or (949) 261-1920 • **Fax:** (949) 261-7451
Sales@Pasternack.com • Techsupport@Pasternack.com

ISO 9001 : 2008 Registered

© 2013 Pasternack Enterprises All Rights Reserved

RG405/U CAD Drawing

086 Semi-rigid Coax Cable with Copper Outer Conductor

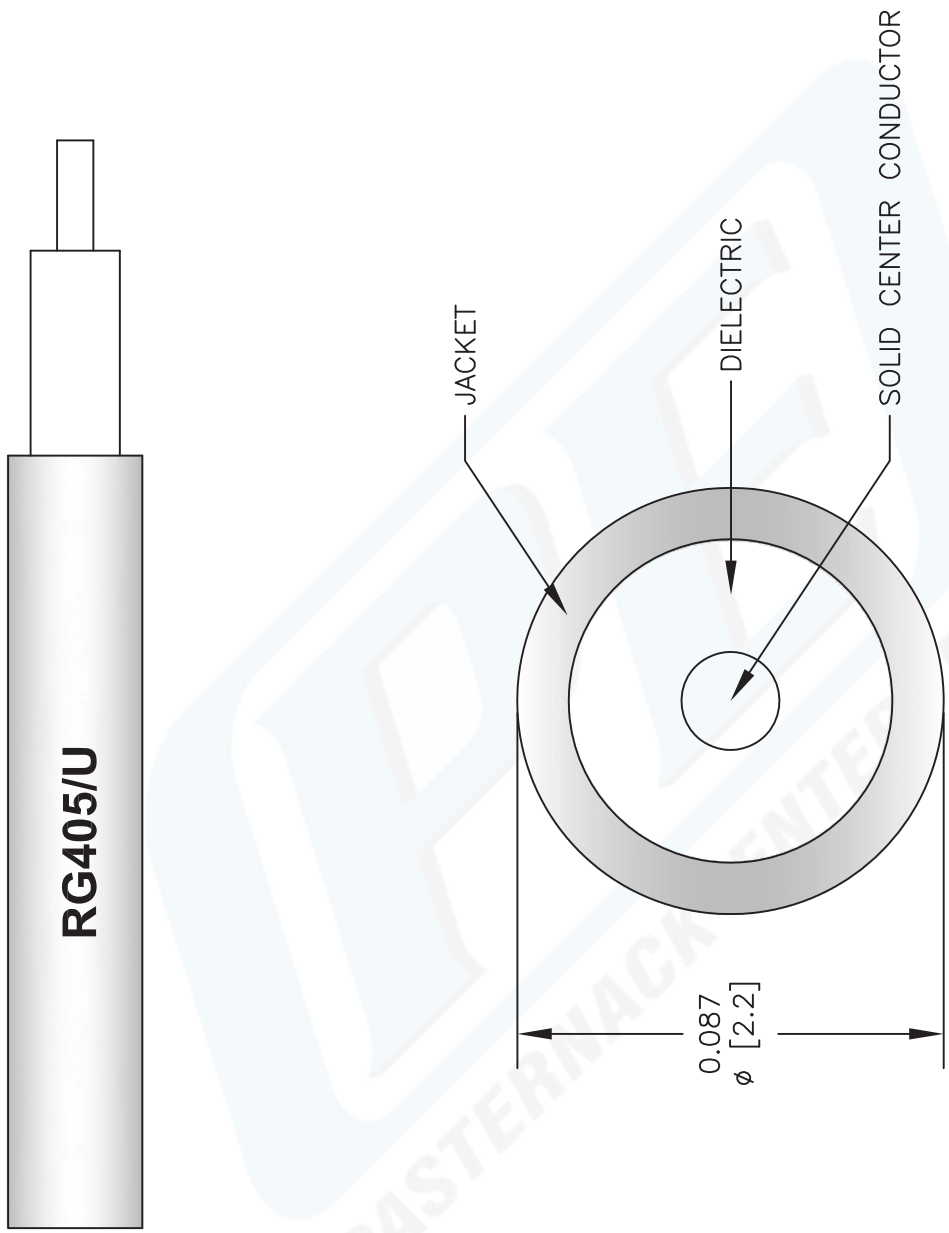

NOTES:
1. UNLESS OTHERWISE SPECIFIED ALL DIMENSIONS ARE NOMINAL.
2. ALL SPECIFICATIONS ARE SUBJECT TO CHANGE WITHOUT NOTICE AT ANY TIME.
3. DIMENSIONS ARE IN INCHES [mm].

DWG TITLE
RG405/U

FSCM NO. 53919

CAD FILE 022908 | SCALE N/A | SIZE A | 2233

PASTERNACK®
Pasternack Enterprises, Inc.
P.O. Box 16759 | Irvine | CA | 92623
Phone: (949) 261-1920 | **Fax:** (949) 261-7451
Website: www.pasternack.com | **E-Mail:** sales@pasternack.com

© 2013 Pasternack Enterprises All Rights Reserved